GENERAL CATALOGUE

2022

AUTOMATION FOR EXTERNAL
CLOSING SYSTEMS, DOORS,
WINDOWS AND SHUTTERS

IF YOU LOVE YOUR BUILDING

Aprimatic

APRIMATIC

The champion of automation.

Aprimatic is the leader in Italy and in Europe for access automation systems. Thanks to the experience gained in two decades of presence in the market and the very high know-how of designers, engineers, testers and consultants, Aprimatic offers its customers high performance, product reliability and value retention in time. Today, Aprimatic is the only company offering all kinds of automation systems, with a complete range of products suitable for residential, commercial and industrial application as well as for public areas.

EXTERNAL CLOSING SYSTEMS

Technological solutions for swing and sliding gates, up-and-over doors and traffic barriers.

DOORS, WINDOWS AND SHUTTERS

Systems for rolling shutters, shutters, windows and domes, sliding doors and home automation.

KIT

Ready-made solutions to meet the most common residential automation requirements.

Catalogue guide

EXTERNAL CLOSING SYSTEMS

The RED section of the catalogue features automation systems for gates, up-and-over doors and for entrances installed in public areas, as well as all-in-one kits for a wide range of automation needs in residential and industrial applications.

DOORS, WINDOWS AND SHUTTERS

The WHITE section of the catalogue presents automation devices for doors, windows and rolling shutters. A specific chapter of this section is devoted to home automation solutions.

technical info

The GREY appendix contains the technical data sheets with product dimensions.

THE URMET GROUP

Urmet Group.
Communication, security and energy.
All over the world, in every project.

Urmet Group means integration of expertise and international dimensions, to offer global solutions to its partners. Born in Italy, it was able to develop internationally and now it has a significant presence on the world market. Our Group designs, develops and markets products and systems in the communication and security sectors, as well as in energy management and saving and telecommunications. In Italy it is a leading manufacturer of video door phone and telephone systems, access automation systems and control, professional intrusion alarm systems, fire alarm and video surveillance systems, from private homes to town redevelopment planning, up to large public infrastructures. It is as a global partner for product quality and service efficiency.

SYSTEMS FOR INTEGRATED COMMUNICATION AND SECURITY

Systems and Products for Video Door Phone, Intrusion Alarm, Access Control, Fire Alarm, Video Surveillance, Residential Applications.

SYSTEMS FOR ENERGY MANAGEMENT AND SAVING

Photovoltaic, Wind Power, Hydroelectric Power, Geothermal Energy, Biomass. Heat Metering and Management Systems.

TELECOMMUNICATION SYSTEMS AND SOLUTIONS

Terminals, Telemetry Systems, Road Lighting, Public Telephone Network Systems, Heat Exchangers, Transport, Remote Management Systems.

URMET GROUP

urmetgroup.com

AT THE SERVICE OF PROFESSIONALS

A COMPLETE RANGE

Aprimatic offers a complete range for every type of product, satisfying the needs of all end users and ensuring their complete satisfaction.

COMMERCIAL ORGANISATION

Aprimatic supports its customers during the entire process, helping them choose the best solution, providing assistance and guaranteeing a complete and accurate service. The sales network covers the entire Italian territory and responds in real time to doubts or installation needs, providing specialised, competent and timely support.

CUSTOMER SERVICE

Aprimatic Customer Service is available to companies and installers to provide all the necessary support during installation and operation of the equipment.

SERVICE NETWORK

Over forty authorised service centres throughout Italy constitute an extensive, homogeneous and always up-to-date network.

WEB

Click on www.aprimatic.com to enter a world of information and services designed for end customers and installers, including special on-line services such as consultation of detailed exploded views.

TRAINING

Meetings for the presentation of news, courses on new products and systems, update seminars on professional and regulatory issues improve the quality of everyone's work and represent a benefit for end customers.

SHOWCASE

24V low voltage operator

New model of low voltage electromechanical operator for swing gates.

Rolling Shutter motors

Range extension with new motors (single and double motor) with lifting power from 190Kg up to 380Kg.

Operator for up-and-over doors

Brand new low-voltage electromechanical operator for sectional and counterweight-balanced up-and-over doors.

12V Photocells

The wall-mounted photocells with a 20-metre range can also be welded onto a post. They are self-aligning and with IP45 protection degree. They operate with 12V and 24V power supply.

NEW AT APRIMATIC: **ARMS, ROLLING SHUTTERS AND PHOTOCELLS**

SERIE R251
P. 34-36

RO-MATIC RS230 / RD360 / RD460
P. 134-136

MATIX BOX 800 / 1200
P. 82

ER48
P. 110

Radar

New microwave + IR mixed technology radar for automatic door control.

Wireless tubular motors

The entire range of Aprimatic Revolux, known for its performance and reliability, is now available version 45S and 59S three limit switch with control multiposition for the management of the movement of adjustable shutters, with integrated receiver.

Accessories and control units

New range of control units and accessories to facilitate remote control of wired and wireless automations.

Gate remote control

New remote control for gates and up-and-over doors supporting up to 4 radio channels for the transmission of pulses. Programming only in MODE 0 - Standard.
Suitable for simple installations where programming with the Apricot system is not necessary.

THE NEWS: **RADAR, WIRELESS TUBULAR MOTORS AND REMOTE CONTROLS**

DT90C
P.192

SERIE REVOLUX MP
P. 126-129

1 / 5 / 15 CHANNELS
P. 166

TM4L
P. 104

01.
AUTOMATION KITS

KIT R251FM / R251 FE
KIT G-MATIC AP350
KIT TWENTY 270
KIT HOCKENHEIM ONDA 624
KIT ONDA 623
KIT INDIANAPOLIS ONDA 801
KIT ESTORIL ALZO
KIT MATIC-BOX 800
KIT MATIC-BOX 1200

EUROPEAN STANDARDS

Standards **EN 12453** and **EN 12445** set out the minimum safety parameters. For automatic closing systems whose operation involves persons. These standards allow the identification of the necessary technical measures aimed at ensuring the safety of users and facilities.

Classification criteria include the position of the system, the type of user and the control mode.

THE SYSTEM can be:

a system can be found in a delimited **private area**, in a **private area which adjoins a public area** or in a completely **public area**.

THE USER can be:

a user is **not instructed** when he/she has not received the necessary information to operate the automation system; this generally happens for automation systems found in public areas. For automation systems in private areas, instead, the user is usually **instructed**.

THE CONTROL can be:

the system can be controlled in a number of ways: **automatic** when the pulse activates a series of operations and not a single action; **radio-controlled** if a pulse corresponds to a single operation (e.g.: opening or closing); operated by **pulses from a fixed position** if the activation of the system is possible from a single location even without automatic control reset; finally, it may lack the **self-holding** function, if the desired action lasts as long as the command activation.

MANDATORY SAFETY DEVICES

A – Operator present and control with automatic reset

B – Operator present and control with manual reset

C – Mechanical or electronic devices (you need to check the conformity of the impact forces tolerated compared to reference standards)

D – Infrared photocells to detect obstacles in the operation area

THE SCENARIO – REGULATORY REQUIREMENTS

User and type of system	Control device: without self-holding	with pulse from a fixed position	radio control	automatic
privat d user	A	C	C	C + D
private area not instructed user	C	C	C + D	C + D
public area instructed user	B	C	C + D	C + D
public area not instructed user	~	C + D	C + D	C + D

EXAMPLE OF A TYPICAL SYSTEM COMPLIANT WITH **EN 12453 - EN 12445** STANDARDS

System
ON A PUBLIC AREA

The system marks the boundary between a private and a public area (e.g., the driveway gate with a ramp for a condominium garage).

User
INSTRUCTED

The system is activated by people having received a proper training on the automation system operation.

Control
RADIO

To send pulses even from a fixed position (e.g. from a desktop) or from a mobile station.

Safety is guaranteed by
INFRARED BEAM PHOTOCELLS

Aprimatic automation systems are designed for connection of all types of infrared beam photocells, ensuring greater safety for the user.

SAFETY EDGES

Sensitive edge used to prevent the risk of crushing due to electric gates movement. In case of contact, the automation system inverts motion and prevents damage to people and property.

CHOOSING THE RIGHT PRODUCT

Easy to purchase, fast to install

Aprimatic optimises your stock with only a few references. Packaging is designed to ensure exceptionally clear and readable information, making it easier to find the right product. Aprimatic has already identified all the difficulties that may be encountered by installers when working with highly technological solutions and has therefore decided to solve these problems with practical ready-to-use kits. Everything you need is ready for assembly: discover the advantage of these genuine technological gems to make your installations quicker, easier and more durable.

Three-year warranty. Aprimatic kits are covered by an extended warranty. For an unbeatable long-lasting safety.

3 years warranty

TYPES

SWING GATES

Recommended installation for gates with one or two wings, where the operating space is reduced by the presence of walls and fences. Wings usually open inwards inside the property and require a certain room for movement.

- **KIT R251**
- **KIT AP350**
- **KIT TWENTY 270 B**
- **KIT TWENTY 270 C**
- **KIT TWENTY 270 SF**

SLIDING GATES

Easy installation, ideal for moving a single wing, equipped with rack, running on a ground rail. This type of system is used in long and narrow spaces where the gate slides during opening and closing.

- **KIT HOCKENHEIM ONDA 624**
- **KIT ONDA 623**
- **KIT INDIANAPOLIS ONDA 801**

UP-AND-OVER DOORS

Ideal installation for spring-loaded or counterweight-balanced up-and-over doors and sectional doors, for residential use.

- **KIT ESTORIL ALZO**
- **KIT MATIC-BOX 800**
- **KIT MATIC-BOX 1200**

Electromechanical wing operator KITS

KIT NAME	WING WIDTH (m) 1,8 3,0 4,0	WING WEIGHT (kg)	USE
R251	*	500 300	R
AP 350	*	350	R

(*) For gates with wings longer than 1.8m, it is necessary to use the electric lock.

Hydraulic wing operator KITS

KIT NAME	WING WIDTH (m) 1,8 3,0 4,0	WING WEIGHT (kg)	USE
TWENTY 270	*	~ ~	R C

(*) For gates with wings longer than 1.8m, it is necessary to use the electric lock.

Sliding gate KITS

KIT NAME	WING WEIGHT (kg)	USE
HOCKENHEIM ONDA 624 (24V)	400 600	R C
ONDA 623 (230V)	400 600	R C
INDIANAPOLIS ONDA 801 (230V)	500 800	R C

Up-and-over door operator KITS

KIT NAME	MAX. DOOR DIMENSION	USE
ESTORIL ALZO	3,5 x 3,0 m	R
MATIC-BOX 800	10/12 m^2	R
MATIC-BOX 1200	14/18 m^2	R

KEY R RESIDENTIAL C CONDOMINIUM I INDUSTRIAL

KIT R251 FM

41070/804

NEW | 24 Vcc | 3 warranty | 300 kg | i213

Self-learning configuration and possibility of adjusting the parameters through a simple and intuitive menu.

Pre-drilled adjustable rear bracket. The arms are equipped with mechanical limit stops to allow stroke adjustment.

Continuous operation guaranteed, in case of power supply failure, by two optional emergency batteries.

The use of an electric lock is recommended **for gate wings longer than 1.8 metres**.

FM model equipped with mechanical limit switches, easily adjustable (it is however necessary to provide a stop on the ground).

Kit for swing gates, for residential use, with electromechanical arm operator, with mechanical limit switch.

TECHNICAL DATA

MAIN POWER SUPPLY	230 Vca - 50 Hz
MOTOR POWER SUPPLY	24 Vdc
MAX. THRUST FORCE	2500 N
MAX. WING WIDTH WITHOUT ELECTRIC LOCK	1,8 m
MAX. WING WIDTH WITH ELECTRIC LOCK	3 m
MAX. WING WEIGHT	300 kg (for 3 m wing) 500 kg (for 1.8 m wing)
WEIGHT KIT	16,5 kg

OPERATOR DIMENSIONS

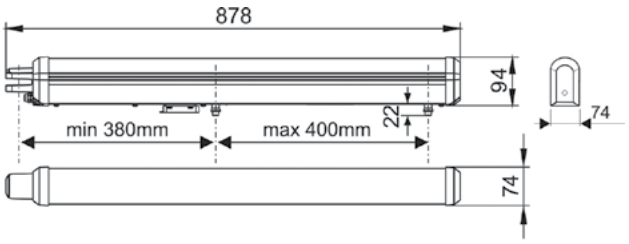

Tthe max stroke reduces by 16mm with one limit switch and by 32mm with two limit switches

KIT 41070/804. The kit includes:

ITEM NUMBER	DESCRIPTION	Pcs.	
41070/001	R251 FM operator with mechanical limit switch	2	
41629/001	BA24 control unit (with receiver 433.92MHz built-in)	1	
41905/024	TM4L- 433.92 MHz four-channel transmitter	2	
41929/003	KIT antenna 433.92 MHz for ET2N-ET20N	1	
41812/010	ER48 12-24V Pair of photocells	1	

(*) For gates with wings longer than 1.8 m, it is necessary to use the electric lock.

ITEM NUMBER	DESCRIPTION	Pcs.	
41840/010	ET2N-W 24V Flashing light	1	
41830/007	PC12E Wall-mounted key-operated switch	1	
	Aprimatic signal panel		

NOTE: For the available safety and signalling devices and for installation accessories, see section "Control units and indicators" in this catalogue (refer to the initial index).

KIT R251 FE

41070/802

NEW | 24 Vcc | 3 warranty | 300 kg | i 213

Self-learning configuration and possibility of adjusting the parameters through a simple and intuitive menu.

Pre-drilled adjustable rear bracket. The arms are equipped with mechanical limit stops to allow stroke adjustment.

Continuous operation guaranteed, in case of power supply failure, by two optional emergency batteries.

FE model is equipped of electromechanical limit switch (by internal microswitch) suitable for systems where it is not possible to use a stop on the ground.
The adjustment of the limit switches is possible only with use the BA24 control unit and with the optional limit switch management card.

Kit for swing gates, for residential, with electromechanical arm operator.

TECHNICAL DATA

MAIN POWER SUPPLY	230 Vac - 50 Hz
MOTOR POWER SUPPLY	24 Vdc
MAX. THRUST FORCE	2500N
MAX. WING WIDTH WITHOUT ELECTRIC LOCK	1,8 m
MAX. WING WIDTH WITH ELECTRIC LOCK	3 m
MAX. WING WEIGHT	300 kg (for 3 m wing) 500 kg (for 1.8 m wing)
WEIGHT KIT	16,5 kg

(*) For gates with wings longer than 1.8 m, it is necessary to use the electric lock.

OPERATOR DIMENSIONS

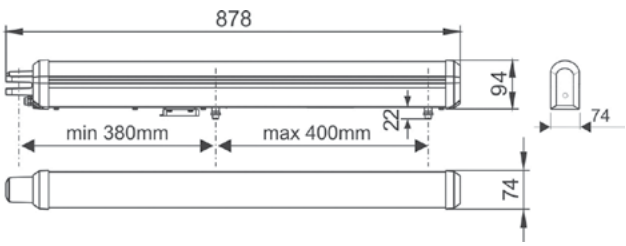

KIT 41070/802. The kit includes:

ITEM NUMBER	DESCRIPTION	Pcs.	
41070/002	R251 FE operator with electronic limit switch	2	
41629/001	BA24 control unit (with receiver 433.92MHz built-in)	1	
41629/050	Card to manage limit switch	1	
41905/024	TM4L- 433.92 MHz four-channel transmitter	2	
41929/003	KIT antenna 433.92 MHz for ET2N-ET20N	1	
41812/010	ER48 12-24V Pair of photocells	1	

ITEM NUMBER	DESCRIPTION	Pcs.	
41840/010	ET2N-W 24V Flashing light	1	
41830/007	PC12E Wall-mounted key-operated switch	1	
	Aprimatic signal panel		

NOTE: For the available safety and signalling devices and for installation accessories, see section "Control units and indicators" in this catalogue (refer to the initial index).

KIT AP 350

41035/800-801

230V | 350 kg | 3 warranty | i214

Made in Italy.

Resistant to hifgh and low temperature.
Simple installation with brackets secured to the gate. The most widespread among swing gate automation systems. Possibility to create single or double wing systems. Unit control with microprocessor and 433Mhz receiver, easy setting;
Irreversible operator with key to lock and unlock.

Complies with the current safety standards as regards to obstacle detection and inversion of movement in accordance with **EN12453** and **EN12445** (product certified under ideal installation conditions).

Kit for swing gates up to 350Kg per leaf. Residential use, with electromechanical arm operator.

TECHNICAL DATA

MAIN POWER SUPPLY	230 V - 50 Hz
MAX. WING WIDTH WITHOUT ELECTRIC LOCK	1,8 m
MAX. WING WIDTH WITH ELECTRIC LOCK	3 m
MAX. WING WEIGHT	350 kg
WEIGHT KIT	17 kg

OPERATOR DIMENSIONS

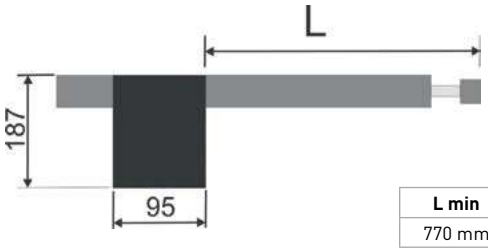

L min	L max
770 mm	1130 mm

41035/801. The kit includes:

ITEM NUMBER	DESCRIPTION	Pcs.
41035/001	Left swing gate operator	1
41035/002	Right swing gate operator	1
41628/001	BA230 control unit (with receiver 433.92MH)	1
41905/024	TM4L 433,92 Mhz four channel trasmitter	2
	Aprimatic signal panel	

41035/800. The kit includes (in addition to 41035/801):

ITEM NUMBER	DESCRIPTION	Pcs.
41840/010	ET2N-W 24V LED flashing light	1
41812/010	ER48 12-24V Pair of photocells	1
41929/003	Antenna Kit	1

NOTE: For the available safety and signalling devices and for installation accessories, see section "Control units and indicators" in this catalogue (refer to the initial index).

KIT TWENTY 270 B

41012/800

Simple and linear design with a compatible aestetics for all types of gates.

The slowing down system in the closing (adjustable by control unit) allows a soft approach of the wings, silently and without mechanical stress to the structure;

Emergency relaese system under the top cover.
It equipped with front hitch ball joint uniball threaded 20mm, like the previous range ZT44, which allows to retrieve any tolerances during the fixing.

Extremely sturdy and flexible pillar mounting thanks to the rear flange with articulated aluminium fork.

Kit for swing gates, with hydraulic operator with lock on openings and closing, with slowing down system in the closing adjustable electronically. Condominium use.

TECHNICAL DATA

MAIN POWER SUPPLY	230 V - 50 Hz
MAX. WING WIDTH WITH ELECTRIC LOCK	3 m
MAX. CYCLE NUMBER	800 cycles/day
WEIGHT KIT	23 kg

OPERATOR DIMENSIONS

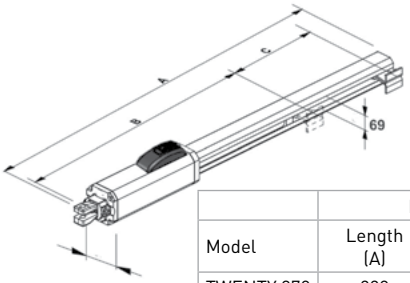

	DIMENSIONS (mm)		
Model	Length (A)	Distance attacks (B)	Rod stroke (C)
TWENTY 270	990	723	270

KIT 41012/800. The kit includes:

ITEM NUMBER	DESCRIPTION	Pcs.	
41012/001	Operator TWENTY 270 B	2	
41628/001	BA230 control unit (with receiver 433.92Mhz)	1	
41905/024	TM4L - 433.92 MHz four-channel transmitter	2	
41929/003	KIT antenna 433.92 MHz for ET2N-ET20N	1	

ITEM NUMBER	DESCRIPTION	Pcs.	
41840/010	ET2N-W 24V LED flashing light	1	
41812/010	ER48 12-24V Pair of photocells	1	
41830/007	PC12E - Wall-mounted key-operated switch	1	
	Aprimatic signal panel		

NOTE: For the available safety and signalling devices and for installation accessories, see section "Control units and indicators" in this catalogue (refer to the initial index).

KIT TWENTY 270 C

41012/802

3 warranty · i215

Simple and linear design with a compatible aestetics for all types of gates.

The slowing down system in the closing (adjustable by control unit) allows a soft approach of the wings, silently and without mechanical stress to the structure;

Emergency relaese system under the top cover.
It equipped with front hitch ball joint uniball threaded 20mm, like the previous range ZT44, which allows to retrieve any tolerances during the fixing.

Extremely sturdy and flexible pillar mounting thanks to the rear flange with articulated aluminium fork.

Kit for swing gates, with hydraulic operator with lock on closing, with slowing down system in the closing adjustable electronically. Condominium use.

TECHNICAL DATA

MAIN POWER SUPPLY	230 V - 50 Hz
MAX. THRUST FORCE	5500N
MAX. WING WIDTH WITHOUT ELECTRIC LOCK	1,8 m
MAX. WING WIDTH WITH ELECTRIC LOCK	3 m
MAX. CYCLE NUMBER	800 cycles/day
WEIGHT KIT	23 kg

OPERATOR DIMENSIONS

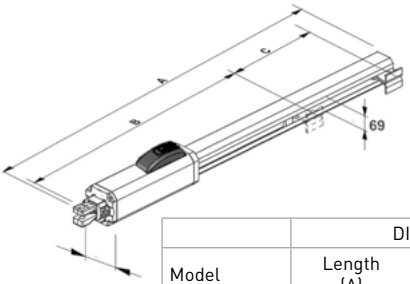

	DIMENSIONS (mm)		
Model	Length (A)	Distance attacks (B)	Rod stroke (C)
TWENTY 270	990	723	270

KIT 41012/80. The kit includes:

ITEM NUMBER	DESCRIPTION	Pcs.	
41012/002	Operator TWENTY 270 C	2	
41628/001	BA230 control unit (with receiver 433.92Mhz)	1	
41905/024	TM4L - 433.92 MHz four-channel transmitter	2	
41929/003	KIT antenna 433.92 MHz for ET2N-ET20N	1	

(*) For gates with wings longer than 1.8 m, it is necessary to use the electric lock.

ITEM NUMBER	DESCRIPTION	Pcs.	
41840/010	ET2N-W 24V LED flashing light	1	
41812/010	ER48 12-24V Pair of photocells	1	
41830/007	PC12E - Wall-mounted key-operated switch	1	
	Aprimatic signal panel		

NOTE: For the available safety and signalling devices and for installation accessories, see section "Control units and indicators" in this catalogue (refer to the initial index).

KIT TWENTY 270 SF

41012/804

Simple and linear design with a compatible aestetics for all types of gates.

The slowing down system in the closing (adjustable by control unit) allows a soft approach of the wings, silently and without mechanical stress to the structure;

Emergency relaese system under the top cover.
It equipped with front hitch ball joint uniball threaded 20mm, like the previous range ZT44, which allows to retrieve any tolerances during the fixing.

Extremely sturdy and flexible pillar mounting thanks to the rear flange with articulated aluminium fork.

Kit for swing gates, with hydraulic operator without lock on openings and closing ,with slowing down system in the closing adjustable electronically. Condominium use.

TECHNICAL DATA

MAIN POWER SUPPLY	230 V - 50 Hz
MAX. THRUST FORCE	5500N
MAX. WING WIDTH WITH ELECTRIC LOCK	3 m
MAX. CYCLE NUMBER	800 cycles/day
WEIGHT KIT	23 kg

OPERATOR DIMENSIONS

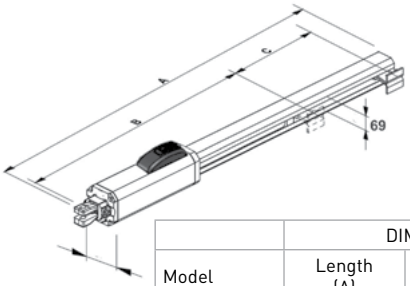

Model	DIMENSIONS (mm)		
	Length (A)	Distance attacks (B)	Rod stroke (C)
TWENTY 270	990	723	270

KIT 40012/804. The kit includes:

ITEM NUMBER	DESCRIPTION	Pcs.	
41012/003	Operator TWENTY 270 SF	2	
41628/001	BA230 control unit (with receiver 433.92Mhz)	1	
41905/024	TM4L - 433.92 MHz four-channel transmitter	2	
41929/003	KIT antenna 433.92 MHz for ET2N-ET20N	1	

ITEM NUMBER	DESCRIPTION	Pcs.	
41840/010	ET2N-W 24V LED flashing light	1	
41812/010	ER48 12-24V Pair of photocells	1	
41830/007	PC12E - Wall-mounted key-operated switch	1	
	Aprimatic signal panel		

(*) For gates with wings longer than 1.8 m, it is necessary to use the electric lock.

NOTE: For the available safety and signalling devices and for installation accessories, see section "Control units and indicators" in this catalogue (refer to the initial index).

KIT HOCKENHEIM ONDA 624

41102/800-802

Safety Tested | 24 Vcc | 3 warranty | 600 kg | i 218

Complies with the current safety standards as regards to obstacle detection and inversion of movement in accordance with **EN12453** and **EN12445** (product certified under ideal installation conditions). The electronic torque adjustment combined with encoder technology guarantees a gradual approach during opening and closing movements.

Continuity of operation guaranteed, in the event of a power supply failure, by a set of optional batteries which may be fitted in the operator casing.

Sturdy and reliable thanks to the die-cast aluminium casing.

Worm screw gear motor with aluminium body and on-board electronic control unit. Equipped with adjustable-height foundation plate.

Emergency release lever with customised key, for use during power supply failures.

New SC24 control unit with radio receiver 433,92Mhz built-in

Sliding gate kit. Residential use for wings up to 600 kg. Condominium use for wings up to 400 kg.

TECHNICAL DATA

MAIN POWER SUPPLY	230 Vac - 50 Hz
MOTOR POWER SUPPLY	24 Vdc with encoder
ABSORBED POWER	100 W
ABSORBED CURRENT	5 A
MAX. THRUST FORCE	650 N
MAX. LINEAR SPEED	10 m/min
OPERATING TEMPERATURE	-20° +55° C
MAX. GATE WEIGHT	600 kg
HEIGHT OF PINION FROM GROUND	62 mm
MAX. CYCLE NUMBER	100 cycles/day
WEIGHT KIT	10 kg

OPERATOR DIMENSIONS

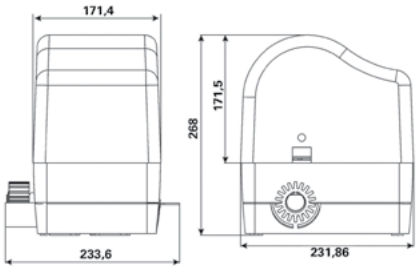

KIT 41102/802. The kit includes:

ITEM NUMBER	DESCRIPTION	Pcs.	
41102/001	ONDA 624 gear motor with dedicated on-board electronic control unit, 433.92 MHz built-in superheterodyne radio receiver, release key and foundation kit	1	
41905/024	TM4L - 433.92 MHz four-channel transmitter	1	
41929/003	KIT antenna 433.92 MHz for ET2N-ET20N	1	
41812/008	ER 12-24V Pair of photocells	1	
	Aprimatic signal panel		

KIT 41102/800. The kit includes (in addition to 41102/802):

ITEM NUMBER	DESCRIPTION	Pcs.	
41840/010	ET2N-W 24V LED flashing light	1	
41830/007	PC12E - Wall-mounted key-operated switch	1	

ITEM NUMBER	ACCESSORIES COMPLETING THE KIT
41180/063	CZ - Aprimatic 4m galvanised steel rack with mounts (module 4)

NOTE: For the available safety and signalling devices and for installation accessories, see section "Control units and indicators" in this catalogue (refer to the initial index).

KIT ONDA 623

41623/800

600 kg | 3 warranty | i 218

Complies with the current safety standards as regards to obstacle detection and inversion of movement in accordance with **EN12453** and **EN12445** (product certified under ideal installation conditions). The electronic torque adjustment combined with encoder technology guarantees a gradual approach during opening and closing movements.

Continuity of operation guaranteed, in the event of a power supply failure, by a set of optional batteries which may be fitted in the operator casing.

Sturdy and reliable thanks to the die-cast aluminium casing.

Worm screw gear motor with aluminium body and on-board electronic control unit. Equipped with adjustable-height foundation plate.

Emergency release lever with customised key, for use during power supply failures.

Sliding gate kit. Residential use for wings up to 600kg.
Condominium use for wings up to 400Kg.

TECHNICAL DATA

MAIN POWER SUPPLY	230 Vac - 50 Hz
ABSORBED POWER	250 W
ABSORBED CURRENT	1,3 A
MAX. THRUST FORCE	650 N
MAX. LINEAR SPEED	10 m/min
OPERATING TEMPERATURE	-20° +55° C
MAX. GATE WEIGHT	600 kg
HEIGHT OF PINION FROM GROUND	62 mm
MAX. CYCLE NUMBER	100 cycles/day
WEIGHT KIT	10 kg

OPERATOR DIMENSIONS

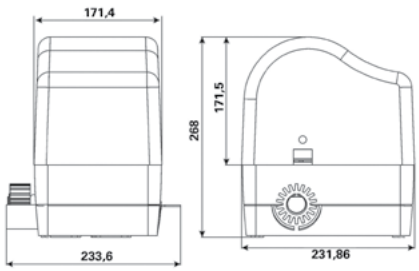

KIT 41623/801. The kit includes:

ITEM NUMBER	DESCRIPTION	Pcs.	
41623/001	ONDA 623 gear motor with control unit SC230 on-board. 433.92 Mhz built-in radio receiver, release key and foundation plate kit.	1	
41905/024	TM4L - 433.92 MHz four-channel transmitter	2	
	Aprimatic signal panel		

KIT 41623/800. The kit includes (in additional to 41623/801):

ITEM NUMBER	DESCRIPTION	Pcs.	
41840/010	ET2N-W 24V LED flashing light	1	
41830/007	PC12E - Wall-mounted key-operated switch	1	
41929/003	KIT antenna 433.92 MHz for ET2N-ET20N	1	
41812/008	ER 12-24V Pair of photocells	1	

ITEM NUMBER	ACCESSORIES COMPLETING THE KIT
41180/063	CZ - Aprimatic 4m galvanized steel rack with mounts (module 4)

NOTE: For the available safety and signalling devices and for installation accessories, see section "Control units and indicators" in this catalogue (refer to the initial index).

KIT INDIANAPOLIS ONDA 801

41127/810

3 warranty | 800 kg | i 219

Maximum safety thanks to the on-board electronic control unit with electronic torque adjustment.
An additional anti-crushing card can be connected as an optional for gate auto reverse if an obstacle is detected during gate closing.

Steel gears with permanent lubrication.

Because it is self-locking, this gear motor keeps the gate shut. Therefore, it is not necessary to use a lock.

In the event of power supply failure you can proceed with the manual key release via a convenient unlocking device.

Kit for sliding gates. Residential use for wings up to 800 kg. Condominium use for wings up to 500 kg.

TECHNICAL DATA

MAIN POWER SUPPLY	230 V - 50 Hz
THRUST FORCE	1250 N
MAX. WING WEIGHT	800 kg (residential use) 500 kg (condominium use)
WEIGHT KIT	13 kg

OPERATOR DIMENSIONS

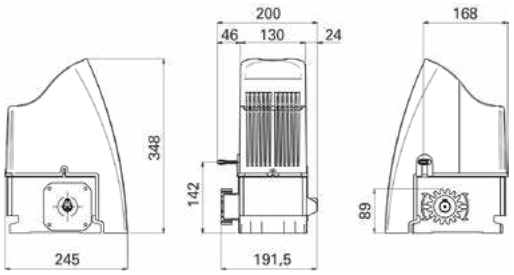

KIT 41127/811. The kit includes:

ITEM NUMBER	DESCRIPTION	Pcs.	
41127/023	ONDA 801 gear motor with SC230 on-board electronic control unit, 433.92 MHz built-in superheterodyne radio receiver, release key and foundation kit	1	
41905/024	TM4L - 433.92 MHz four-channel transmitter	1	
41929/003	KIT antenna 433.92 MHz for ET2N-ET20N	1	
41812/010	ER48 12-24V Pair of photocells	1	
	Aprimatic signal panel		

41127/810. The kit includes (in addition to 41127/811):

ITEM NUMBER	DESCRIPTION	Pcs.	
41840/010	ET2N-W 24V LED flashing light	1	
41830/007	PC12E Wall-mounted key-operated switch	1	

ITEM NUMBER	ACCESSORIES COMPLETING THE KIT
41180/063	CZ - Aprimatic 4m galvanised steel rack with mounts (module 4)

NOTE: For the available safety and signalling devices and for installation accessories, see section "Control units and indicators" in this catalogue (refer to the initial index).

KIT ESTORIL ALZO

41210/801

3 warranty

i 222

Self-locking gear motor, keeping the up-and-over door closed even in the absence of an electric lock. **External emergency release** (optional) for accessing the garage in case of power supply failure.

Maximum anti-crushing safety for the lower edge of the door, thanks to the on-board electronic control unit equipped with electronic torque adjustment and anti-crushing system (which can be disabled).

Great quality material: steel drive parts, die-cast aluminium gear motor body and ABS protective cover guarantee IP 44 protection degree.

Slowdown system for a soft approach of the door during opening and closing, thus avoiding noise and mechanical stress to the structure.

Kit for counterweight-balanced up-and-over doors with electromechanical operator. Residential use.

TECHNICAL DATA

MAIN POWER SUPPLY	230 V - 50 Hz
MAX. SHEET DIMENSION	3,5 x 3 m (for single motor) 5 x 3 m (for double motor drive)
WEIGHT KIT	10 kg

OPERATOR DIMENSIONS

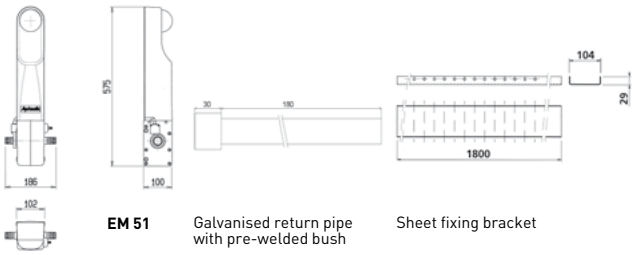

KIT 41210/801:

ITEM NUMBER	DESCRIPTION	Pcs.	
41210/002	ALZO electromechanical operator with T3SC on-board electronic control unit and 433.92 MHz built-in superheterodyne radio receiver	1	
41905/024	TM4L - 433.92 MHz four-channel transmitter	1	

ITEM NUMBER	DESCRIPTION	Pcs.	
41210/058	Pair of plasma-cut, quick-fit curved arms	1	
	Aprimatic signal panel		

ITEM NUMBER	ACCESSORIES COMPLETING THE SINGLE MOTOR KIT
41210/062	HARDWARE KIT (for single-motor installation)
	The package includes:
	Two 1.8 m, Ø 25 mm x 3 galvanised pipes with pre-welded bushes, 180 cm sheet fixing bracket

For two-motor installations suitable for doors up to 5 x 3 m, add:		Pcs.
41210/001	EM51 SLAVE OPERATOR Including a pair of 20 cm pipes with splined bush	1
41210/061	ST180 - sheet fixing bracket L=180cm	1
41210/069	Pair of quick fit straight arms	1

NOTE: For the available safety and signalling devices and for installation accessories, see section "Control units and indicators" in this catalogue (refer to the initial index).

KIT MATIC-BOX 800

41243/800

NEW | 24 Vcc | 3 warranty | i 223

Maximum anti-crushing safety thanks to the on-board electronic control unit equipped with auto reverse function when an obstacle is detected while closing the gate.

MATIC-BOX operators can be used for sectional doors if installed with the adapter arm accessory, also for counterweight-balanced up-and-over door automation.

Slowdown system for a soft approach of the door during opening and closing, thus avoiding noise and mechanical stress to the structure.

Timed courtesy light built into the operator to light up the garage during opening and closing.

Silent and resistant thanks to the belt drive.

Continuity of operation guaranteed, in the event of a power supply failure, by a set of optional batteries which may be fitted in the operator casing.

Kit with low-voltage electromechanical operator for sectional and counterweight-balanced up-and-over doors. Residential use.

TECHNICAL DATA	41243/800
MAIN POWER SUPPLY	220V ac 50/60Hz
MOTOR POWER SUPPLY	24 Vdc
TRACTION FORCE	800 N
MAX. SHEET DIMENSION	10-12 m^2
WEIGHT KIT	5 kg

OPERATOR DIMENSIONS

Dimensions mm		
Width	height	Depth
218	365	125

KIT 41243/800 includes:

ITEM NUMBER	DESCRIPTION	Pcs.	
41243/800	MATIC-BOX 800 Operator with on-board unit and 433.92 MHz radio receiver, (guide NOT included -see "Guides completing the kit and accessories)	1	
41905/024	TM4L - 433.92 MHz four-channel transmitter	2	
	Aprimatic signal panel		

ITEM NUMBER	GUIDES COMPLETING THE KIT AND ACCESSORIES
41241/056	Adapter arm for counterweight-balanced up-and-over doors
41243/068	3m Belt drive rail 2part (2 pcs x 1.65m)
41243/060	3,90m Belt drive rail 2part (2 pcs x 1.95m)
41243/070	Manual release without handle
41840/010	ET2N-W 24V LED Flashing light
41812/010	ER48 12-24V Pair of photocells

NOTE: For the available safety and signalling devices and for installation accessories, see section "Control units and indicators" in this catalogue (refer to the initial index).

KIT MATIC-BOX 1200

41243/810

NEW | 24 Vcc | 3 warranty | i 223

Maximum anti-crushing safety thanks to the on-board electronic control unit equipped with auto reverse function when an obstacle is detected while closing the gate.

MATIC-BOX operators can be used for sectional doors if installed with the adapter arm accessory, also for counterweight-balanced up-and-over door automation.

Slowdown system for a soft approach of the door during opening and closing, thus avoiding noise and mechanical stress to the structure.

Timed courtesy light built into the operator to light up the garage during opening and closing.

Silent and resistant thanks to the belt drive.

Continuity of operation guaranteed, in the event of a power supply failure, by a set of optional batteries which may be fitted in the operator casing.

Kit with low-voltage electromechanical operator for sectional and counterweight-balanced up-and-over doors. Residential use.

TECHNICAL DATA	41243/810
MAIN POWER SUPPLY	220V ac 50/60Hz
MOTOR POWER SUPPLY	24 Vdc
TRACTION FORCE	1200 N
MAX. SHEET DIMENSION	14-18 m^2
WEIGHT KIT	5 kg

OPERATOR DIMENSIONS

Dimensions mm		
Width	height	Depth
218	365	125

KIT 41243/810 includes:

ITEM NUMBER	DESCRIPTION	Pcs.	
41243/810	MATIC-BOX 1200 Operator with on-board unit and 433.92 MHz radio receiver, (guide NOT included -see "Guides completing the kit and accessories)	1	
41905/024	TM4L - 433.92 MHz four-channel transmitter	2	
	Aprimatic signal panel		

ITEM NUMBER	GUIDES COMPLETING THE KIT AND ACCESSORIES
41241/056	Adapter arm for counterweight-balanced up-and-over doors
41243/068	3m Belt drive rail 2part (2 pcs x 1.65m)
41243/060	3,90m Belt drive rail 2part (2 pcs x 1.95m)
41243/070	Manual release without handle
41840/010	ET2N-W 24V LED Flashing light
41812/010	ER48 12-24V Pair of photocells

NOTE: For the available safety and signalling devices and for installation accessories, see section "Control units and indicators" in this catalogue (refer to the initial index).

02.
SWING GATES

R251 FM
R251 FE
AP350
FORTY 270-390
TWENTY 270
EM73N
ZT70
ZT71

SWING GATES

TYPES

EXTERNAL MOUNTING
Linear operators

Simple installation with brackets secured to the gate. The most widespread among swing gate automation systems.

UNDERGROUND MOUNTING

It is virtually invisible and does not affect the gate design style. It does not limit the passage's clear width.

Electromechanical
R251FM
R251 FE
AP350

Hydraulic
TWENTY 270
FORTY 270-390

Electromechanical
EM 73 N

Hydraulic
ZT 70
ZT 71

TYPICAL SYSTEM COMPOSITION

1) Operator: device allowing, with an external power supply, to move a gate.
2) Control unit: electronic unit for handling the operator movement.
3) Transmitter: wireless equipment that transmits information to the control unit.
4) Antenna: device that increases the reception of the signals sent by the transmitter.
5) Flashing light: light signalling that the gate is moving.
6) Pair of photocells: safety devices stopping gate movement if an obstacle is detected.
7) Control unit: it allows activation of gate movement through a mechanical or electronic key.
8) Electric lock: to be included based on gate wing width.

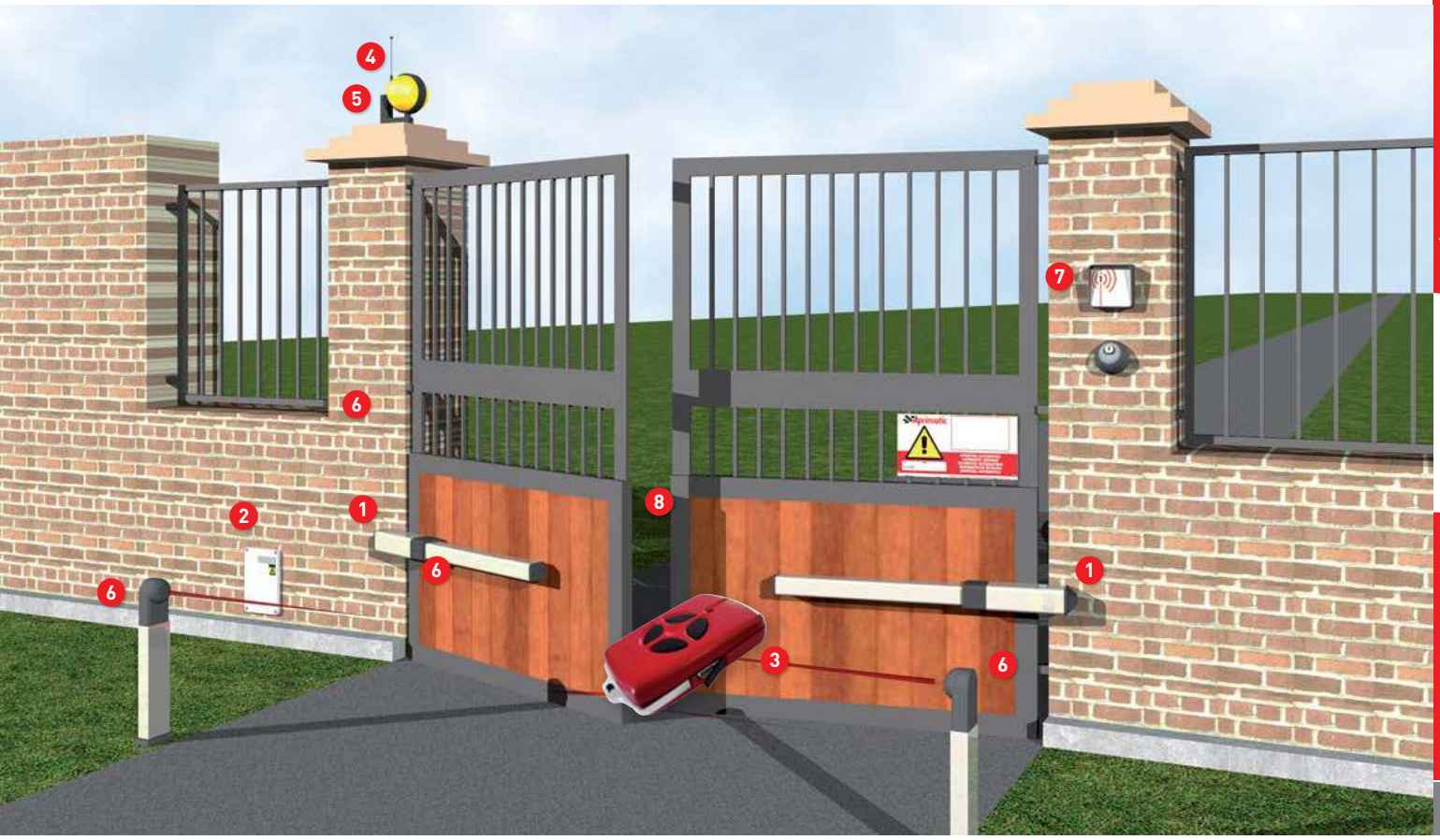

EUROPEAN STANDARDS

Standards **EN 12453** and **EN 12445** set out the minimum safety parameters. For automatic closing systems whose operation involves persons. These standards allow the identification of the necessary technical measures aimed at ensuring the safety of users and facilities.

Classification criteria include the position of the system, the type of user and the control mode.

THE SYSTEM can be:

a system can be found in a delimited **private area**, in a **private area which adjoins a public area** or in a completely **public area**.

THE USER can be:

a user is **not instructed** when he/she has not received the necessary information to operate the automation system; this generally happens for automation systems found in public areas. For automation systems in private areas, instead, the user is usually **instructed**.

THE CONTROL can be:

the system can be controlled in a number of ways: **automatic** when the pulse activates a series of operations and not a single action; **radio-controlled** if a pulse corresponds to a single operation (e.g.: opening or closing); operated by **pulses from a fixed position** if the activation of the system is possible from a single location even without automatic control reset; finally, it may lack the **self-holding** function, if the desired action lasts as long as the command activation.

MANDATORY SAFETY DEVICES

A – Operator present and control with automatic reset

B – Operator present and control with manual reset

C – Mechanical or electronic devices (you need to check the conformity of the impact forces tolerated compared to reference standards)

D – Infrared photocells to detect obstacles in the operation area

THE SCENARIO – REGULATORY REQUIREMENTS

User and type of system	Dispositivo di comando: without self-holding	with pulse from a fixed position	radio control	automatic
private area instructed user	A	C	C	C + D
private area not instructed user	C	C	C + D	C + D
public area instructed user	B	C	C + D	C + D
public area not instructed user	~	C + D	C + D	C + D

EXAMPLE OF A TYPICAL SYSTEM COMPLIANT WITH **EN 12453 - EN 12445** STANDARDS

System
ON A PUBLIC AREA

The system marks the boundary between a private and a public area (e.g., the driveway gate with a ramp for a condominium garage).

User
INSTRUCTED

The system is activated by people having received a proper training on the automation system operation.

Safety is guaranteed by
INFRARED BEAM PHOTOCELLS

Aprimatic automation systems are designed for connection of all types of infrared beam photocells, ensuring greater safety for the user.

Control
RADIO

To send pulses even from a fixed position (e.g. from a desktop) or from a mobile station.

REFERENCE LAYOUT FOR SWING GATES - EXTERNAL AUTOMATION SYSTEMS

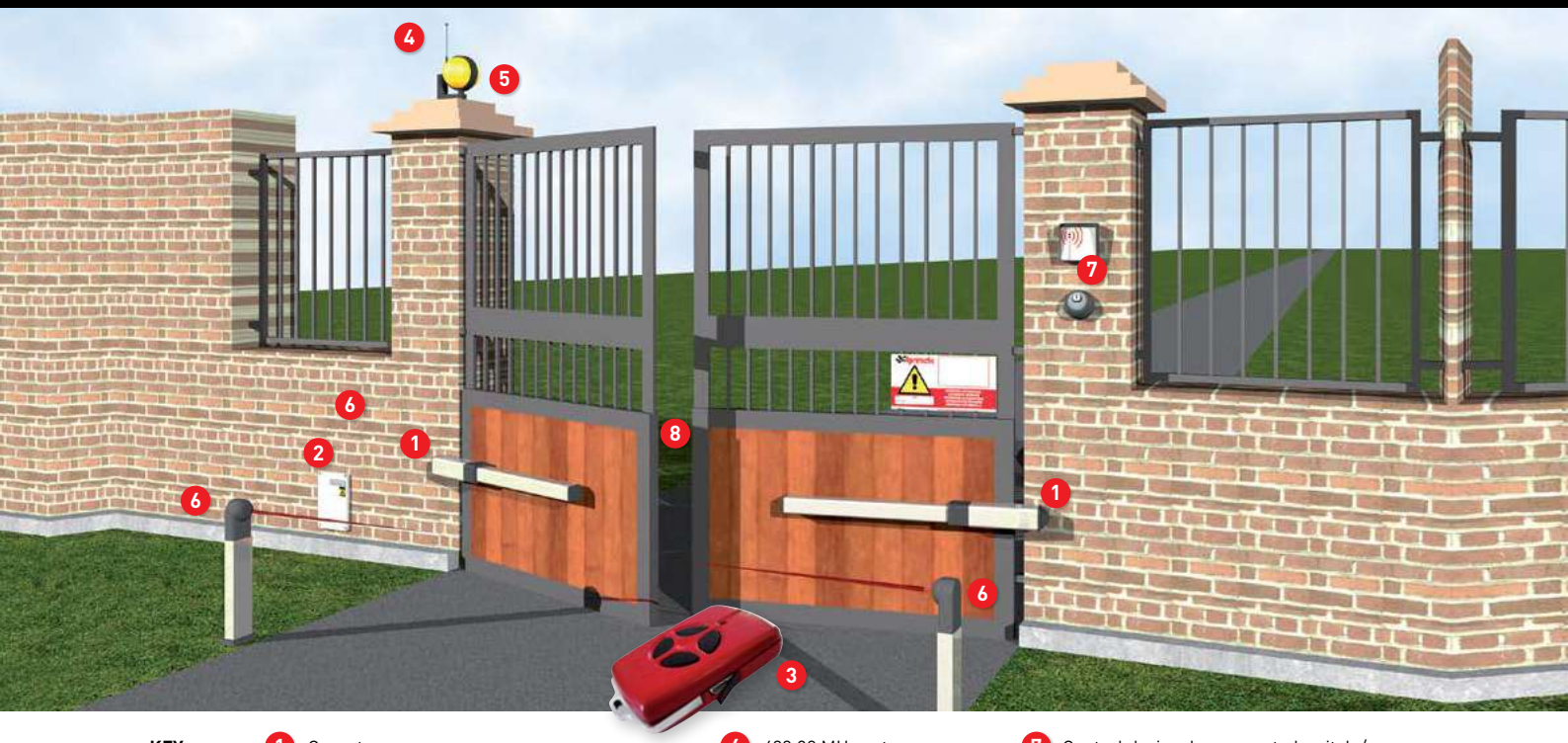

KEY

1. Operator
2. Electronic control unit
3. Transmitter
4. 433.92 MHz antenna
5. Flashing light
6. Pair of photocells
7. Control device: key-operated switch / presence reader / keyboard combination lock / card reader / magnetic keys
8. Electric lock

CHOOSING THE RIGHT PRODUCT

EXTERNAL MOUNTING AUTOMATION SYSTEMS

	MODEL	POWER SUPPLY	ALIM.	CYCLES PER DAY	WING WEIGHT	MAX. WING WIDTH	TECHNOLOGY	PAGE
	R251 FM	R	24 Vcc	50	500 Kg	1,8 m	Electromechanical	34-36
	R251 FE				300 Kg	3,0 m*		
	AP350	R	230 Vac	50	350 Kg	3 m*	Electromechanical	38
	TWENTY 270	R	230 Vac	800		1,8 m	Hydraulic	40
		C				3,0 m*		
	FORTY 270	C	230 Vac	1000		2,0 m; 4,0 m*	Hydraulic	42
	FORTY 390	I	230 Vac	800		3,0 m; 7,0 m*		

Continuous →

REFERENCE LAYOUT FOR SWING GATES - UNDERGROUND AUTOMATION SYSTEMS

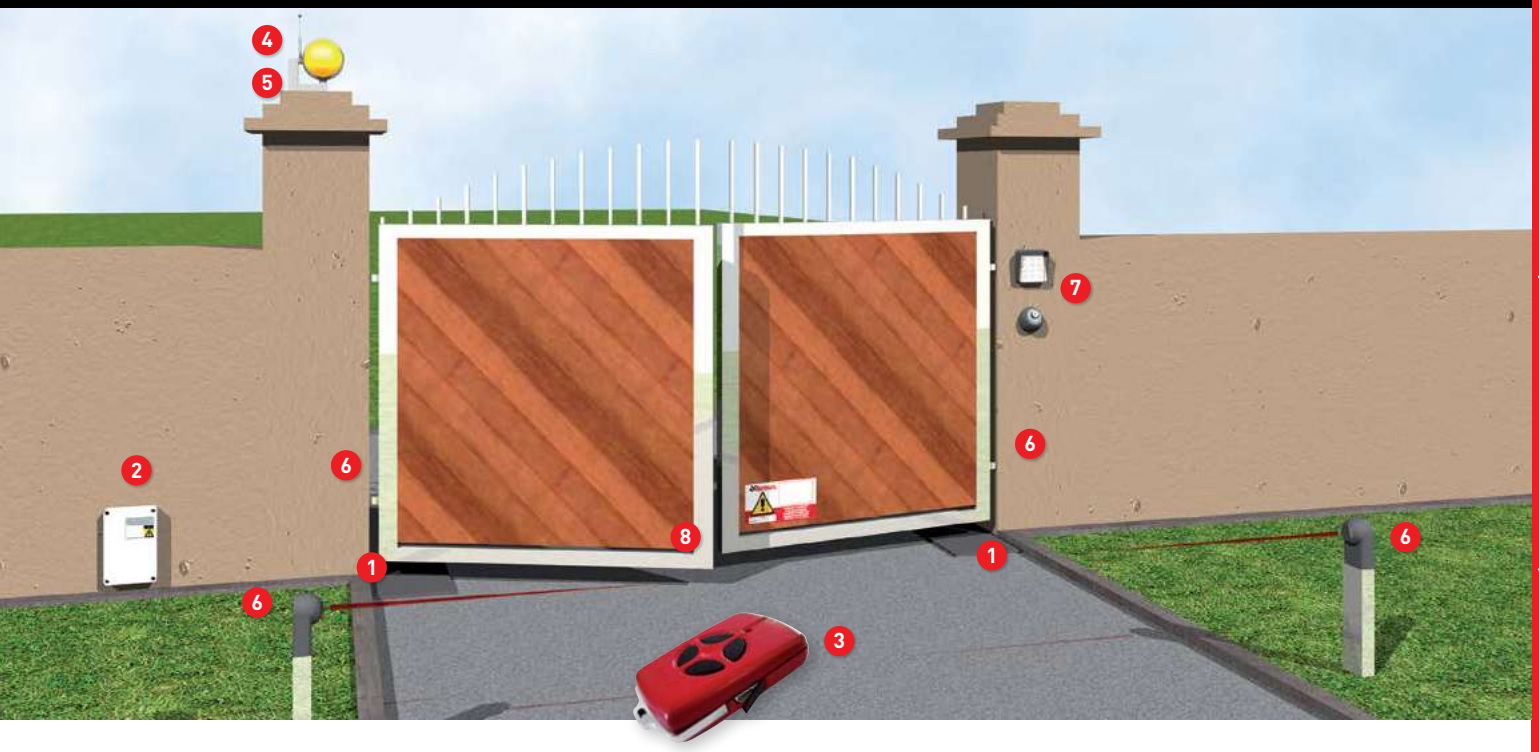

NOTE: For equipment and control, safety and warning devices, see the optional accessories indicated for the specific operator.

NOTE: For more devices, see the section "Control units and Indicators" in this catalogue (refer to the initial index).

UNDERGROUND-MOUNTED AUTOMATION SYSTEMS

	MODEL	USE	POWER SUPPLY	CYCLES PER DAY	WING WEIGHT	MAX. WING WIDTH	TECHNOLOGY	PAGE
	EM 73 N	R	24 Vdc	50	400 Kg 200 Kg	1,8 m 3,5 m*	Electromechanical	44
	ZT 70	R C	230 Vac	300	800 Kg	2,0 m 4,0 m*	Hydraulic	46
	ZT 71	R C	230 Vac	300	800 Kg	2,0 m 4,0 m*	Hydraulic	48

KEY R RESIDENTIAL C CONDOMINIUM I INDUSTRIAL

* Electric lock needed. For product version type, see key on page 237.
NOTE: The data provided refer to correctly installed products undergoing regular maintenance.

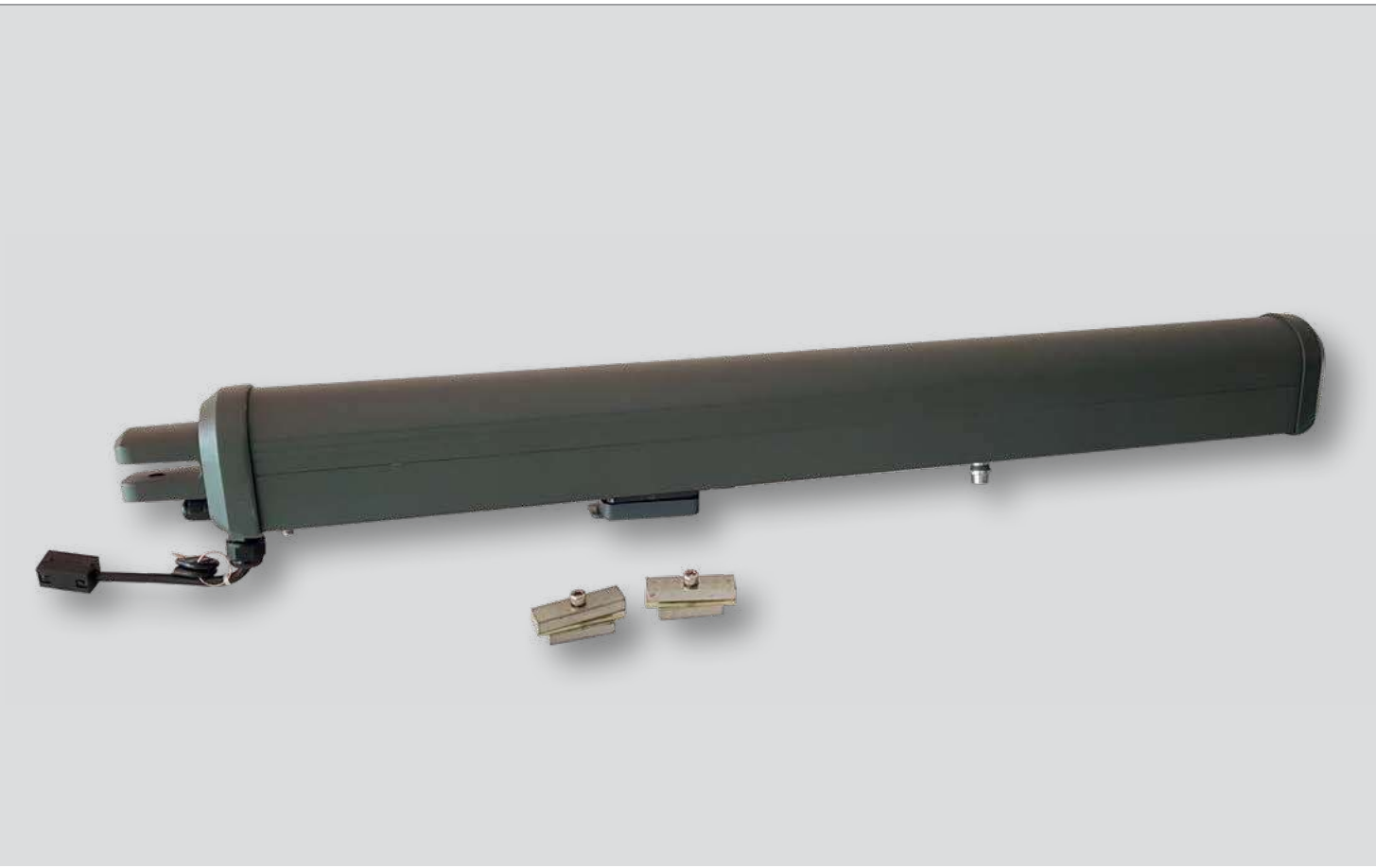

R251 FM

NEW | 24 Vcc | 400 kg | i 213

Low-voltage electromechanical operator, for swing gates. Residential use.

TECHNICAL DATA

MAIN POWER SUPPLY	230 Vac - 50 Hz
MOTOR POWER SUPPLY	24 Vdc
MAX. WING WIDTH WITHOUT ELECTRIC LOCK	1,8 m
MAX. WING WIDTH WITH ELECTRIC LOCK	3 m
MAX. WING WEIGHT	300 kg (for 3 m wing) 500 kg (for 1.8 m wing)
MAX. CYCLE NUMBER	50 cycles/day
PROTECTION DEGREE	IP44
ABSORBED POWER	48 W
ABSORBED CURRENT	2 A
MAX. THRUST FORCE	2500 N
ROD STROKE	400 mm
LINEAR SPEED	16 mm/s
OPERATING TEMPERATURE	-20° +50° C
ANTI-CRUSHING SAFETY	Electronic
WEIGHT OPERATOR	7 Kg

Low voltage electromechanical operator equipped with mechanical limit switches, easily adjustable (it is however necessary to provide a stop on the ground).

Full self-learning **configuration** and possibility of adjusting the parameters through a simple and intuitive menu.

Pre-drilled adjustable rear bracket. The arms are equipped with mechanical limit stops to allow stroke adjustment. The use of an electric lock is recommended for gate wings longer than 1.8 metres.

Continuous operation guaranteed, in case of power supply failure, by two optional emergency batteries.

IDEAL INSTALLATION (1.8 M wing*)			
ITEM NUMBER	**DESCRIPTION**	**SINGLE WING**	**DOUBLE WING**
41070/001	R251 FM - 24V	1	2
41629/001	BA24 - 24V low voltage electronic control unit with 433.92MHz receiver built-in	1	1
41905/024	TM4L - 433.92 MHz four-channel transmitter	N	N
41812/010	ER48 12-24V - Pair of photocells	1	1
41929/001	ANT433 - 433.92 MHz antenna with 4.5 m coaxial cable and ground connection	1	1
41840/010	ET2N-W - 24V LED flashing light	1	1
41830/007	PC12E - Wall-mounted key-operated switch	1	1
41702/003	Battery kit (optional)	1	1

(*) For gates with wings longer than 1.8 m, it is necessary to use the electric lock.

N = Based on specific installation requirements

ITEM NUMBER	DESCRIPTION
41070/001	R251 FM - 24V 24 V electromechanical operator including mounts and mechanical limit stops
41629/001	BA24 - 24V low voltage electronic control unit with 433.92MHz receiver built-in

ITEM NUMBER	OPTIONAL ACCESSORIES
41702/003	Battery kit nr.2 battteries 12Vcc - 1.3Ah
41629/051	Basic wired battery charger (cable for connecting the output control unit to the battery)
41629/052	Battery charger card with charge control for a long battery life. Device + connection cables.
41629/053	Expansion module for electric lock

NOTE: For the available safety and signalling devices and for installation accessories, see section "Control units and indicators" in this catalogue (refer to the initial index).

R251 FE

NEW | 24 Vcc | 400 kg | i 213

Low-voltage electromechanical operator, for swing gates. Residential use.

TECHNICAL DATA

MAIN POWER SUPPLY	230 Vac - 50 Hz
MOTOR POWER SUPPLY	24 Vdc
MAX. WING WIDTH WITHOUT ELECTRIC LOCK	1,8 m
MAX. WING WIDTH WITH ELECTRIC LOCK	3 m
MAX. WING WEIGHT	300 kg (for 3 m wing) 500 kg (for 1.8 m wing)
MAX. CYCLE NUMBER	50 cycles/day
PROTECTION DEGREE	IP44
ABSORBED POWER	48 W
ABSORBED CURRENT	2 A
MAX. THRUST FORCE	2500 N
ROD STROKE	400 mm
LINEAR SPEED	16 mm/s
OPERATING TEMPERATURE	-20° +50° C
ANTI-CRUSHING SAFETY	Electronic
WEIGHT OPERATOR	7 Kg

Low voltage electromechanical operator FE model is equipped of electromechanical limit switch (by internal microswitch) suitable for systems where it is not possible to use a stop on the ground. The adjustment of the limit switches is possible only with use the BA24 control unit and with the optional limit switch management card.

Full self-learning **configuration** and possibility of adjusting the parameters through a simple and intuitive menu. **Pre-drilled adjustable rear bracket.** The arms are equipped with mechanical limit stops to allow stroke adjustment.

The use of an electric lock is recommended for gate wings longer than 1.8 metres. **Continuous operation guaranteed**, in case of power supply failure, by two optional emergency batteries.

IDEAL INSTALLATION (1.8 M wing*)			
ITEM NUMBER	**DESCRIPTION**	**SINGLE WING**	**DOUBLE WING**
41070/002	R251 FE - 24V	1	2
41629/001	BA24 - 24V low voltage electronic control unit with 433.92MHz receiver built-in	1	1
41905/024	TM4L - 433.92 MHz four-channel transmitter	N	N
41812/010	ER48 12-24V - Pair of photocells	1	1
41929/001	ANT433 - 433.92 MHz antenna with 4.5 m coaxial cable and ground connection	1	1
41840/010	ET2N-W - 24V LED flashing light	1	1
41830/007	PC12E - Wall-mounted key-operated switch	1	1
41702/003	Battery kit (optional)	1	1

(*) For gates with wings longer than 1.8 m, it is necessary to use the electric lock.

N = Based on specific installation requirements

ITEM NUMBER	DESCRIPTION
41070/002	R251 FE - 24V 24 V electromechanical operator including mounts and mechanical limit stops
41629/001	BA24 - 24V low voltage electronic control unit with 433MHz receiver built-in
41629/050	FC BA24 card to manage electronic limit switch

ITEM NUMBER	OPTIONAL ACCESSORIES
41702/003	Battery kit nr.2 battteries 12Vcc - 1.3Ah
41629/051	Basic wired battery charger (cable for connecting the output control unit to the battery)
41629/052	Battery charger card with charge control for a long battery life. Device + connection cables.
41629/053	Expansion module for electric lock

NOTE: For the available safety and signalling devices and for installation accessories, see section "Control units and indicators" in this catalogue (refer to the initial index).

AP 350

Operator for swing gates. Residential use for wings up to 3m 350Kg.

TECHNICAL DATA	
POWER SUPPLY	230 Vac
MAXIMUM LENGHT PER LEAF	3 mt
MAXIMUM WEIGHT PER LEAF	350 Kg
MAX. CYCLE NUMBER	50 cycles/day
PROTECTION DEGREE	IP 44
ABSORBED POWER	290 W
ABSORBED CURRENT	1,3 A
ROD SPEED (CM/S)	1,8
USABLE STROKE	MAX 400 mm
TERMIC PROTECTION	150° C
OPERATING TEMPERATURE	-20° +70° C
CAPACITOR	8µF
MOTOR WEIGHT	6 Kg

SAFETY
LOCK / UNLOCK

Possibility to create single
- or double-wing systems

Simple installation
Easy to release in case of power blackout
Resistant to high and low temperatures

Suitable for left- and right swing leafs
Max. leaf opening 350kg length 3 mt

Rod stroke 400mm
Power supply 230Vac

Made in Italy

Safety lock / unlock

IDEAL INSTALLATION (1.8 m wing)*

ITEM NUMBER	DESCRIPTION	Q.ty
41035/001	Left swing gate operator AP350	1
41035/002	Right swing gate operator AP350	1
41628/001	BA230- Electronic control unit with 433.92Mhz receiver built-in	1
41905/024	TM4L 433.92MHz four channel trasmitter	N
41840/010	ET2N-W - 24V LED flashing light	1
41812/008	ER48 12-24V Pair of photocells	1
41929/001	ATN433 MHz antenna with 5mt coaxial cable and ground connection	1
41830/007	PC12E - Wall-mounted key-operated switch	1

(*) For gates with wings longer than 1.8 m, it is necessary to use the electric lock.
N: Based on specific installation requirements.

ITEM NUMBER	DESCRIPTION	Q.ty
41035/001	Left swing gate operator AP350	1
41035/002	Right swing gate operator AP350	1
41628/001	BA230- Electronic control unit with 433.92MHz receiver built-in	1

NOTE: For the available safety and signalling devices and for installation accessories, see section "Control units and indicators" in this catalogue (refer to the initial index).

TWENTY 270

215

Hydraulic swing gate operators. For condominium and intensive use.

TECHNICAL DATA	TWENTY 270
MAIN POWER SUPPLY	230 V - 50 Hz
ABSORBED POWER	250 W
MAX. WING WIDTH WITHOUT ELECTRIC LOCK	1.8 m
MAX. WING WIDTH WITH ELECTRIC LOCK	3 m
MAX. CYCLE NUMBER	800 cycles/day
PROTECTION DEGREE	IP55
MAX. THRUST FORCE	5500N
VERSIONS	B - C - SF
SLOWDOWN ON CLOSING	Yes (electronically adjustable)
SLOWDOWN ON CLOSING AND OPENING	NO
LINEAR SPEED	1.3 cm/s
OPERATING TEMPERATURE	-20° +70° C
ROD STROKE	270 mm
WEIGHT OPERATOR	9 kg

UNIBALL MOUNT

Simple and linear design with a compatible aestetics for all types of gates.

The slowing down system in the closing (adjustable by control unit) allows a soft approach of the wings, silently and without mechanical stress to the structure; The slowing down can be electronically adjustable.

It equipped with front hitch ball joint uniball threaded 20mm, like the previous range ZT4-ZT44, which allows to retrieve any tolerances during the fixing.

IDEAL INSTALLATION

ITEM NUMBER	DESCRIPTION		SINGLE WING	DOUBLE WING
41012/001	TWENTY (choose the version in the list of available models)		1	2
41605/802	ESB 433- 433.92MHz swing gate Elettroset	**Item numbers included in the Elettroset**	1	1
	BA230 electronic control unit with 433MHz built-in radio receiver	**41628/001**		
	433.92MHz antenna kit	**41929/003**		
	Two TM4L - 433.92MHz four-channel Transmiters	**41905/024**		
	ET2N-W 24V led flashing light	**41840/010**		
	ER48 12-24V - Pair of photocells	**41812/010**		
	PC12E - Wall-mounted key-operated switch	**41830/007**		
	Signal panel			

ITEM NUMBER	DESCRIPTION	Max.wing width without electric lock	Max.wing width with electric lock
41012/001	TWENTY 270 B Hydraulic operator - locks on opening and closing	1.8 m	3 m
41012/002	TWENTY 270 C Hydraulic operator - locks on closing	1.8 m	3 m
41012/003	TWENTY 270 SF Hydraulic operator - without lock	-	3 m
41628/001	BA230 electronic control unit with 433MHz built-in radio receiver		

The slowing down closing, is adjustable on all operators by control unit.
SF versions, without hydraulic lock, always require the use of the electric lock.

ITEM NUMBER	OPTIONAL ACCESSORIES
41012/050	Cover for retrofit RH
41012/051	Cover for retrofit LF

Note: Cover with profile adapted for the replacement on the swing gates where was mounted a previous ZT-XT operators.

NOTE: For the available safety and signalling devices and for installation accessories, see section "Control units and indicators" in this catalogue (refer to the initial index).

FORTY 270-390

Hydraulic swing gate operators. For residential, condominium and intensive use.

TECHNICAL DATA	FORTY 270	FORTY 390
MAIN POWER SUPPLY	230 V - 50 Hz	230 V - 50 Hz
ABSORBED POWER	250 W	350 W
MAX THRUS T FORCE	6700 N	7800 N
MAX. WING WIDTH WITHOUT ELECTRIC LOCK	2 m	3 m
MAX. WING WIDTH WITH ELECTRIC LOCK	4 m	7 m
MAX. CYCLE NUMBER	1000 cycles/day	800 cycles/day
PROTECTION DEGREE	IP55	IP55
VERSIONS	B - C - SF	B - C - SF
SLOWDOWN ON CLOSING	yes - electronically adjustable	yes - electronically adjustable
LINEAR SPEED	1.3 cm/s	1.3 cm/s
OPERATING TEMPERATURE	-25° +70° C	-20° +70° C
ROD STROKE	270 mm	390 mm
WEIGHT OPERATOR	13 kg	13 kg

UNIBALL MOUNT

Simple and linear design with a compatible aestetics for all types of gates.

The standard hydraulic slowing down system in the closing (non-adjustable) allows a soft approach of the wings, silently and without mechanical stress to the structure; The slowing down can be electronically adjustable.

It equipped with front hitch ball joint uniball threaded 20mm, like the previous range ZT40, which allows to retrieve any tolerances during the fixing.

IDEAL INSTALLATION

ITEM NUMBER	DESCRIPTION		SINGLE WING	DOUBLE WING
41013/001	FORTY (choose the version in the list of available models)		1	2
41605/802	ESB 433- 433.92MHz swing gate Elettroset	**Item numbers included in the Elettroset**	1	1
	BA230 electronic control unit with 433MHz built-in radio receiver	**41628/001**		
	433.92MHz antenna kit	**41929/003**		
	Two TM4L - 433.92MHz four-channel Transmiters	**41905/024**		
	ET2N-W led flashing light	**41840/010**		
	ER48 12-24V - Pair of photocells	**41812/010**		
	PC12E - Wall-mounted key-operated switch	**41830/007**		
	Signal panel			

ITEM NUMBER	DESCRIPTION	Max.wing width without electric lock	Max.wing width with electric lock
41013/001	FORTY 270 B Hydraulic operator - locks on opening and closing	2 m	4 m
41013/002	FORTY 270 C Hydraulic operator - locks on closing	2 m	4 m
41013/003	FORTY 270 SF Hydraulic operator - without lock	-	4 m
41013/004	FORTY 390 B Hydraulic operator - locks on opening and closing	3 m	7 m
41013/005	FORTY 390 C Hydraulic operator - locks on closing	3 m	7 m
41013/006	FORTY 390 SF Hydraulic operator - without lock	-	7 m
41628/001	BA230 electronic control unit with 433MHz built-in radio receiver		

NOTE : All operators are equipped with hydraulic slowing down in the closing system fix (but electronically adjustable).

NOTE : The Forty B-C operator can also be used with wings longer than 2.0 m, but in that case the electric locks is required.
SF versions, without hydraulic lock, always require the use of the electric lock.

NOTE: For the available safety and signalling devices and for installation accessories, see section "Control units and indicators" in this catalogue (refer to the initial index).

EM 73N

24 Vcc · 400 kg · i216

Underground electromechanical operator for swing gates. Residential use.

TECHNICAL DATA

MAIN POWER SUPPLY	230 V - 50 Hz
MOTOR POWER SUPPLY	24 Vcc
WING OPENING ANGLE	110°, 140°, 180°
WIDTH / WEIGHT	1,8 m / 400 kg 3,5 m / 200 kg*
PROTECTION DEGREE	IP67
ABSORBED POWER	200 W
ABSORBED CURRENT	10 A
NOMINAL TORQUE	280 Nm
OPERATING TEMPERATURE	-20° +70° C
110° OPENING TIME	20 s
SLOWDOWN	Optional
WEIGHT OPERATOR	9 Kg

(*) It is necessary to use the electric lock with wings longer than 1.8 m.

The underground system is not visible, and is ideal for those who do not wish to alter the gate design style.

Maximum safety thanks to the 24 V power supply voltage.

Anti-crushing safety ensured by a simple adjustment of the T4 POWER electronic control unit. Cataphoresis-coated sheet metal.

Self-supporting container.
System of levers with anti-corrosion electro-plating. 110° gate opening.

EM 73N can be equipped with a separate lever system that enables opening up to 140° or a chain pinion system for opening up to 180°.

The application of an optional slowdown system allows the EM 73N to let the doors perform a fast movement during the stroke, and a soft approach on opening and closing, thus eliminating noisy impacts and rebounds.

For greater safety of operation, a manual emergency release device (SB73) is available upon request. A customised key-operated lock prevents accidental actuation of the wing's emergency release pedal. The lock can be activated from both inside and outside the gate.

IDEAL INSTALLATION (max. 2 m wing)

ITEM NUMBER	DESCRIPTION		SINGLE WING	DOUBLE WING
41060/001	EM 73N Operator		1	2
41060/051	CIA 173 - 400 kg underground self-supporting box		1	2
41060/052	SB73 - Release lock		1	2
41600/001	T4 Power - Electronic control unit		1	1
41923/009	RR SE - Unico 433.92 MHz Memory System superheterodyne receiver		1	1
41700/801	EKK 24V - Elettrokit	**Item numbers included in the Elettrokit**		
	433.92 MHz antenna kit	**41929/003**		
	Two TM4L - 433.92 MHz four-channel transmitters	**41905/024**		
	ET2N-W - 24V LED flashing light	**41840/010**		
	ER48 12-24V - Pair of photocells	**41812/010**		
	PC12E - Wall-mounted key-operated switch	**41830/007**		
	Signal panel			
41060/050	SAC - Gate wing mounting bracket		1	2
41060/055	1st wing slowdown kit		1	1
41060/056	2nd wing slowdown kit		~	1

ITEM NUMBER	DESCRIPTION
41060/001	EM 73N - 24 V underground, self-locking electromechanical operator
41060/051	CIA 173 - Underground self-supporting box
41600/001	T4 POWER - Electronic control unit

ITEM NUMBER	OPTIONAL ACCESSORIES
41020/054	SCB - Buffer battery charging card. To charge buffer batteries up to 4.5 A, for use with T4 POWER units
41060/050	SAC - Gate wing mounting bracket
41060/052	SB73 - Release lock
41060/055	1st wing slowdown kit
41060/056	2nd wing slowdown kit
41060/053	LE140 - Lever-operated unit for opening up to 140°
41060/054	LE180 - Chain-operated unit for opening up to 180°

NOTE: On two-wing gates, the slowdown function requires 1 slowdown kit for the 1st wing and 1 slowdown kit for the 2nd wing if the T4 POWER electronic control unit is used. On single-wing gates, the slowdown function requires 1 slowdown kit for the 1st wing if the T4POWER electronic control unit is used.

NOTE: For the available safety and signalling devices and for installation accessories, see section "Control units and indicators" in this catalogue (refer to the initial index).

ZT 70

Underground swing gate hydraulic operator. Residential and condominium use.

HYDRAULIC CONTROL UNIT ZT 70	B4	B5	SF4	SF5
SINGLE-PHASE POWER SUPPLY	230 V - 50 Hz			
ABSORBED POWER	250 W			
MAX. WING WIDTH (m)	2,0	2,0	4,0	4,0
PUMP CAPACITY (Lt/min)	0,6	0,75	0,6	0,75
PROTECTION DEGREE	IP54			
OPERATING TEMPERATURE	-20° +70° C			
MAX. OPERATING PRESSURE	40 Bar			
OIL QUANTITY	1 Lt			
OIL TYPE	AprimOil			
WEIGHT WITH OIL	5 kg			

JACK	AT 175	AT 176
MAX. USEFUL OPERATING ANGLE	110°	200°
MAX. WING WEIGHT	800 kg	800 kg
PROTECTION DEGREE	IP67	IP67
ANGULAR PUMP SPEED FROM 0.6 Lt/min.	6°/s	6°/s
ANGULAR PUMP SPEED FROM 0.75 Lt/min.	7°/s	7°/s
NOMINAL TORQUE	410 Nm	410 Nm
OIL QUANTITY	1 Lt	1,2 Lt
OIL TYPE	AprimOil	AprimOil
WEIGHT WITH OIL	12 kg	13 kg

Very low noise levels thanks to the hydraulic brake used to slow down the gate during opening and closing, thus preventing rebounds and noisy impacts.

The automation is located underground and therefore does not affect the design style of the gate.

The anti-crushing system consists of very sensitive bypass valves, calibrated during installation. They immediately cut the hydraulic pressure when an obstacle is detected, to ensure maximum system safety.

The system features an easy-maintenance self-supporting box. The jack is accessed by removing the stainless steel cover without removing the gate wing.

An easy-to-use manual release device ensures gate operation **in the event of power supply failure.**

IDEAL INSTALLATION (max. 2 m wing)

ITEM NUMBER	DESCRIZIONE		SINGLE WING	DOUBLE WING
41050/003	AT 175N - Hydraulic jack		1	2
41055/003	ZT 70B5 - Hydraulic tank		1	2
41005/050	CIA 170 - 800 kg underground self-supporting box		1	2
41056/054	TF - 10 m hose for ZT70		1	1
41056/055	RAC - Pair of TF hose couplings		1	2
41700/016	AprimOil (1 litre bottle)		1	1
41605/802	ESB 433 - 433.92 MHz swing gate Elettroset	**Item numbers included in the Elettroset**	1	1
	BA230 electronic control unit with 433Mhz built-in radio receiver	**41628/001**		
	433.92 MHz antenna kit	**41929/003**		
	Two TM4L - 433.92 MHz four-channel transmitters	**41905/024**		
	ET2N-W - 24V LED flashing light	**41840/010**		
	ER48 12-24V - Pair of photocells	**41812/010**		
	PC12E - Wall-mounted key-operated switch	**41830/007**		
	Signal panel			

ITEM NUMBER	DESCRIPTION - HYDRAULIC CONTROL UNIT
41055/003	ZT 70 B5 Hydraulic control unit with metal box - lock on opening and closing
41055/001	ZT 70 SF5 Hydraulic control unit with metal box, without hydraulic lock, electric lock required

ITEM NUMBER	DESCRIPTION - JACK
41050/003	AT 175N Single hydraulic jack for use without self-supporting box (41005/050). Adjustable slowdown during opening and closing
41051/002	AT 176N single hydraulic jack for use without self-supporting box. Adjustable slowdown during opening and closing
41050/002	AT 175 Hydraulic jack with metal box and stainless steel lid. Adjustable slowdown during opening and closing
41051/001	AT 176 Hydraulic jack with metal box and stainless steel lid. Adjustable slowdown during opening and closing
41005/050	CIA 170 Underground self-supporting box complete with installation accessories and stainless steel lid
41050/050	PF 70 Foundation plate for AT 175, AT176 (cataphoresis coated)

ITEM NUMBER	DESCRIPTION - EQUIPMENT
41628/001	BA230 electronic control unit with 433.92 MHz built-in radio receiver

ITEM NUMBER	OPTIONAL ACCESSORIES
41700/016	AprimOil (1 litre bottle)
41056/056	TRA - Copper pipe with 8 mm ext. Ø (to be ordered in the desired length)

NOTE: For the available safety and signalling devices and for installation accessories, see section "Control units and indicators" in this catalogue (refer to the initial index).

ZT 71

Compact underground hydraulic operator for swing gates. Residential and condominium use.

CONTROL UNIT	B5	SF5
SINGLE-PHASE POWER SUPPLY	230 V-50 Hz	
MAX. WING WIDTH (m)	2,0	4,0
PROTECTION DEGREE	IP54	
ABSORBED POWER	250 W	
OPERATING TEMP.	-20°+70° C	
PUMP CAPACITY (Lt/min)	0,75	0,75
MAX. OPERATING PRESSURE	40 Bar	
OIL TYPE	AprimOil	
WEIGHT WITH OIL	5 kg	
OIL QUANTITY	1 Lt	

JACK	
USEFUL OPERATING ANGLE	110° max.
MAX. WING WEIGHT	800 kg
ANGULAR PUMP SPEED FROM 0.6 Lt/min.	6°/s
ANGULAR PUMP SPEED FROM 0.75 Lt/min.	7°/s
NOMINAL TORQUE	410 Nm
WEIGHT WITH OIL	12 kg
OIL QUANTITY	1 Lt
OIL TYPE	AprimOil

Very low noise levels thanks to the hydraulic brake to slowdown the gate during opening and closing, thus preventing rebound and noisy impacts.

The automation is located underground, and therefore does not affect the design style of the gate.

The anti-crushing system consists of very sensitive bypass valves, calibrated during installation. They immediately cut the hydraulic pressure when an obstacle is detected to ensure maximum system safety.

The system features an easy-maintenance self-supporting box. The jack is accessed by removing the stainless steel cover without removing the gate wing.

An easy-to-use manual release device ensures gate operation **in the event of a power supply failure.**

(*) Product certified under ideal installation conditions.

IDEAL INSTALLATION (max. 2 m wing)

ITEM NUMBER	DESCRIPTION		SINGLE WING	DOUBLE WING
41056/002	ZT 71 B5 - (ZT 70 B5 Hydraulic control unit + AT 175N jack)		1	2
41056/051	CIA 171 - 800 kg Underground self-supporting box		1	2
41605/802	ESB 433 - 433.92 MHz swing gate Elettroset	**Item numbers included in the Kit**	1	1
	BA230 electronic control unit with 433MHz built-in radio receiver	**41628/001**		
	433.92 MHz antenna kit	**41929/003**		
	Two TM4L - 433.92 MHz four-channel transmitters	**41905/024**		
	ET2N-W - 24V LED flashing light	**41840/010**		
	ER48 12-24V - Pair of photocells	**41812/010**		
	PC12E - Wall-mounted key-operated switch	**41830/007**		
	Signal panel			

ITEM NUMBER	DESCRIPTION
41056/002	ZT 71B5 (ZT B5 Hydraulic control unit + AT 175N jack) Double hydraulic lock with adjustable slowdown on opening and closing
41056/004	ZT 71SF5 (ZT 70SF5 control unit + AT 175N jack) Without hydraulic lock, adjustable slowdown on opening and closing
41056/051	CIA 171 Self-supporting box complete with installation accessories and stainless steel lid

NOTE: All compact hydraulic operators contain the SED 71/72 direct external release device

ITEM NUMBER	OPTIONAL ACCESSORIES
41056/052	SED 71/72 - Direct external release (provided as standard with all ZT operators)
41056/053	SER 71/72 - Driven external release ZT 71 ZT 72
41704/002	CS - External strongbox, for driven release
41704/004	CSP - Wall mounted outdoor strongbox
41700/016	AprimOil 1 litre bottle

NOTE: For the available safety and signalling devices and for installation accessories, see section "Control units and indicators" in this catalogue (refer to the initial index).

03.
SLIDING GATES

ONDA 624
ONDA 623
ONDA 800 / 801E
AT 80E
ONDA 2000 / 2001
AT 88T
AT 90T / AT 92T

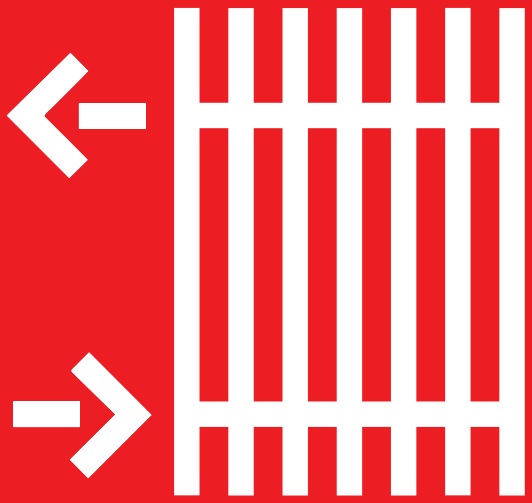

SLIDING GATES

TYPES

RESIDENTIAL USE

A wide range of motors for residential use is available, for light wings up to 400 kg and heavy wings up to 1,200 kg, for the installation of "custom-made" systems.

24V version
ONDA 624

230V version
ONDA 623
ONDA 800
AT 80 E

CONDOMINIUM USE

The following motors for condominium use are available: for light wings of 300 kg and heavy wings up to 2,000 kg.

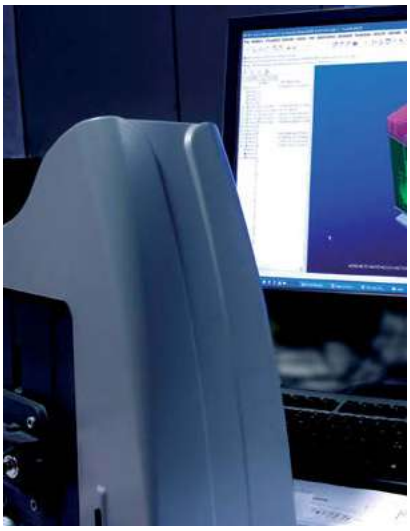

24V version
ONDA 624

230V version
ONDA 623
ONDA 801 E
AT 80 E
ONDA 2000

INDUSTRIAL USE

For industrial use, it is possible to automate heavy gates for large entrances (as in the case of shopping centres, factories, hospitals, etc.), with motors designed to operate gates having wings up to 12,000 kg. Designed to ensure maximum safety in operation and reliable performance over time, to withstand all weather conditions.

230V version
AT 80 E
ONDA 2000

380V version
AT 88 T
AT 90 T
AT 92 T

TYPICAL SYSTEM COMPOSITION

1) Operator: device allowing, with an external power supply, to move a gate.
2) Control unit: electronic unit for handling the operator movement.
3) Transmitter: wireless equipment that transmits information to the control unit.
4) Antenna: device that increases the reception of the signals sent by the transmitter.
5) Flashing light: light signalling that the gate is moving.
6) Pair of photocells: safety devices stopping the gate movement in case of obstacles.
7) Control unit: it allows activation of gate movement through a mechanical or electronic key.
8) Safety edge: sensitive edge used to prevent the risk of crushing due to electric gate movement. In case of contact, the automation system inverts motion and prevents damage to people and property.

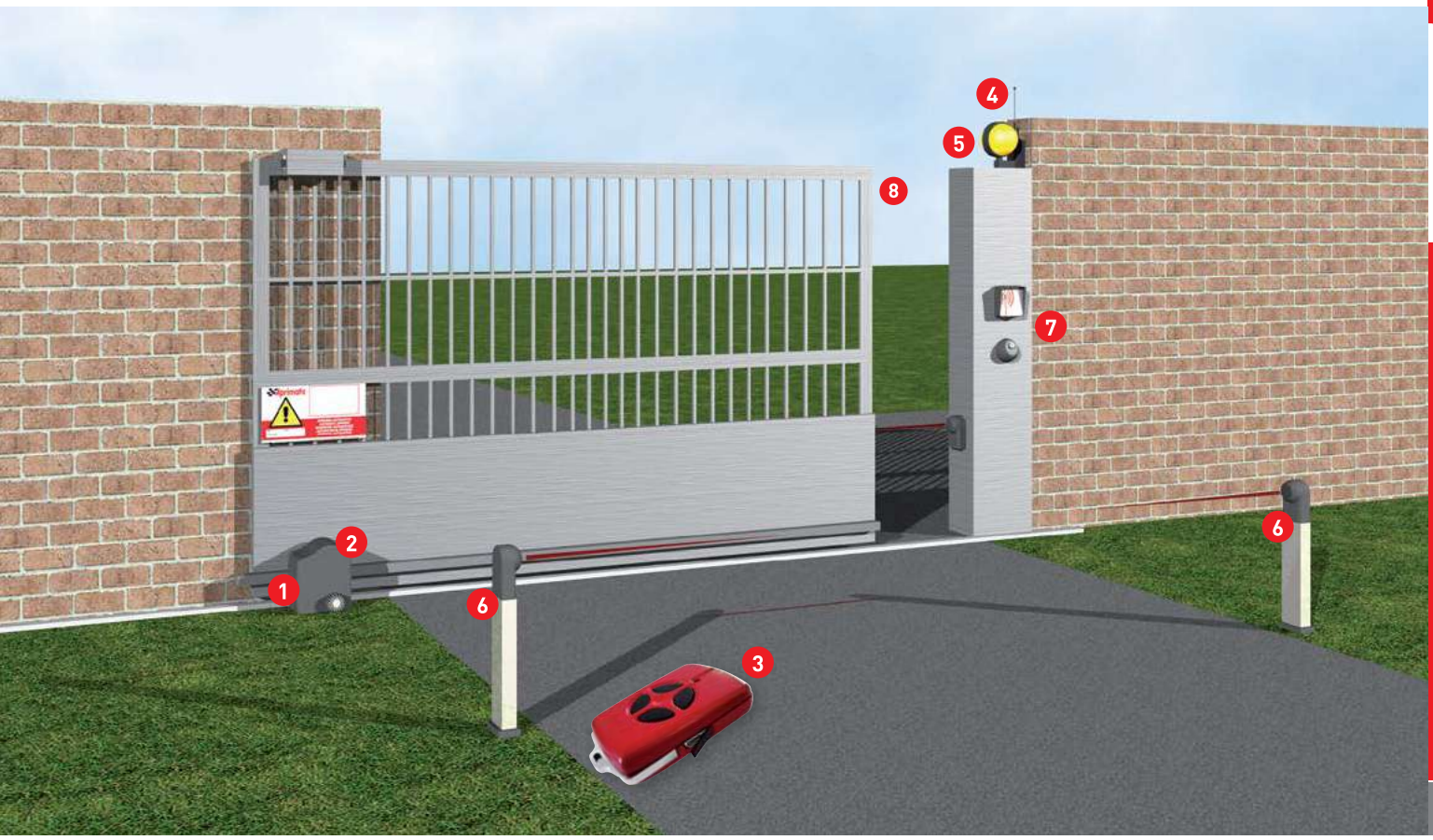

EUROPEAN STANDARDS

Standards **EN 12453** and **EN 12445** set out the minimum safety parameters. For automatic closing systems whose operation involves persons. These standards allow the identification of the necessary technical measures aimed at ensuring the safety of users and facilities.

Classification criteria include the position of the system, the type of user and the control mode.

THE SYSTEM can be:

a system can be found in a delimited **private area**, in a **private area which adjoins a public area** or in a completely **public area**.

THE USER can be:

a user is **not instructed** when he/she has not received the necessary information to operate the automation system; this generally happens for automation systems found in public areas. For automation systems in private areas, instead, the user is usually **instructed**.

THE CONTROL can be:

the system can be controlled in a number of ways: **automatic** when the pulse activates a series of operations and not a single action; r**adio-controlled** if a pulse corresponds to a single operation (e.g.: opening or closing); operated by **pulses from a fixed position** if the activation of the system is possible from a single location even without automatic control reset; finally, it may lack the **self-holding** function, if the desired action lasts as long as the command activation.

MANDATORY SAFETY DEVICES

A – Operator present and control with automatic reset

B – Operator present and control with manual reset

C – Mechanical or electronic devices (you need to check the conformity of the impact forces tolerated compared to reference standards)

D – Infrared photocells to detect obstacles in the operation area

THE SCENARIO – REGULATORY REQUIREMENTS

Utente e tipo di impianto	Control device: Without self-holding	With pulse from a fixed position	Radio control	Automatic
Private area instructed user	A	C	C	C + D
Private area not instructed user	C	C	C + D	C + D
Public area instructed user	B	C	C + D	C + D
Public area not instructed user	~	C + D	C + D	C + D

EXAMPLE OF A TYPICAL SYSTEM COMPLIANT WITH **EN 12453 - EN 12445** STANDARDS

System
ON A PUBLIC AREA

The system marks the boundary between a private and a public area (e.g., the driveway gate with a ramp for a condominium garage).

User
INSTRUCTED

The system is activated by people having received a proper training on the automation system operation.

Control
RADIO

To send pulses even from a fixed position (e.g. desktop) or from mobile stations

Safety is guaranteed by
INFRARED BEAM PHOTOCELLS

Aprimatic automation systems are designed for connection of all types of infrared beam photocells, ensuring greater safety for the user.

SAFETY EDGE

Sensitive edge used to prevent the risk of crushing due to electric gates movement. In case of contact, the automation system inverts motion and prevents damage to people and property.

REFERENCE LAYOUT FOR SLIDING GATE SYSTEMS

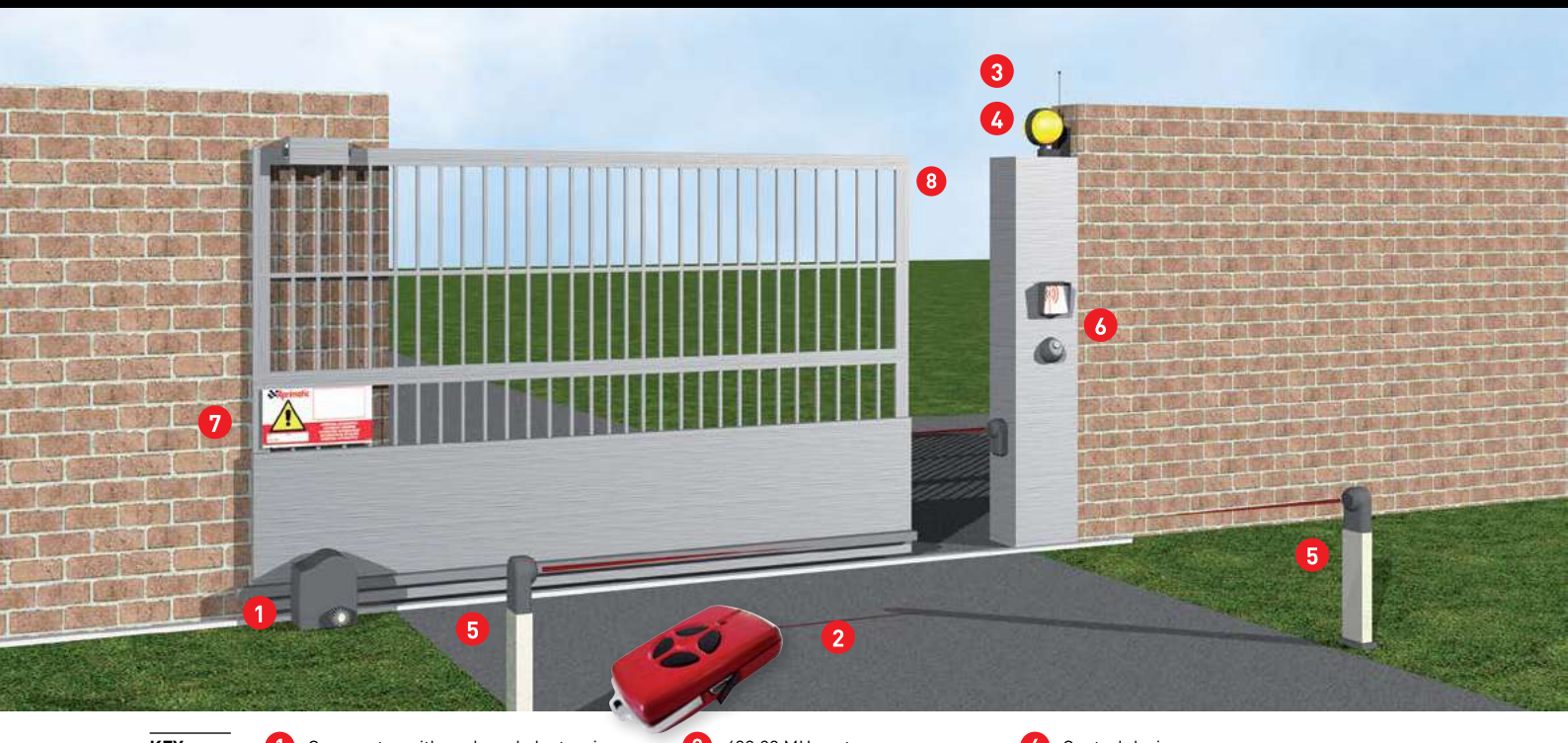

KEY

1. Gear motor with on-board electronic control unit and built-in radio receiver
2. Transmitter
3. 433.92 MHz antenna
4. Flashing light
5. Pair of photocells
6. Control device
7. Aprimatic sign
8. Safety edge

CHOOSING THE RIGHT PRODUCT

EXTERNAL MOUNTING AUTOMATION SYSTEMS

	MODEL	USE	POWER SUPPLY	CYCLES DAY	MAX. WING WEIGHT	CLUTCH	PAGE
	ONDA 624	R C	24 Vdc	100	600 kg 400 kg	Electronic	58
	ONDA 623	R C	230 Vac 230 Vac	100	600 kg 400 kg	Electronic	60
	ONDA 800 **ONDA 801 E**	R C	230 Vac 230Vac	100 200	800 kg 500 kg	800 Mechanical 500 Electronic	62
	AT 80 E	R C I	230 Vac	200 800	1200 kg 800 kg	Mechanical	64
	ONDA 2000 **ONDA 2001**	C I	230 Vac 230 Vac	1000 1000	2000 kg 1000 kg	2000 Mechanical 2001 Electronic	66

REFERENCE LAYOUT FOR SLIDING GATE SYSTEMS

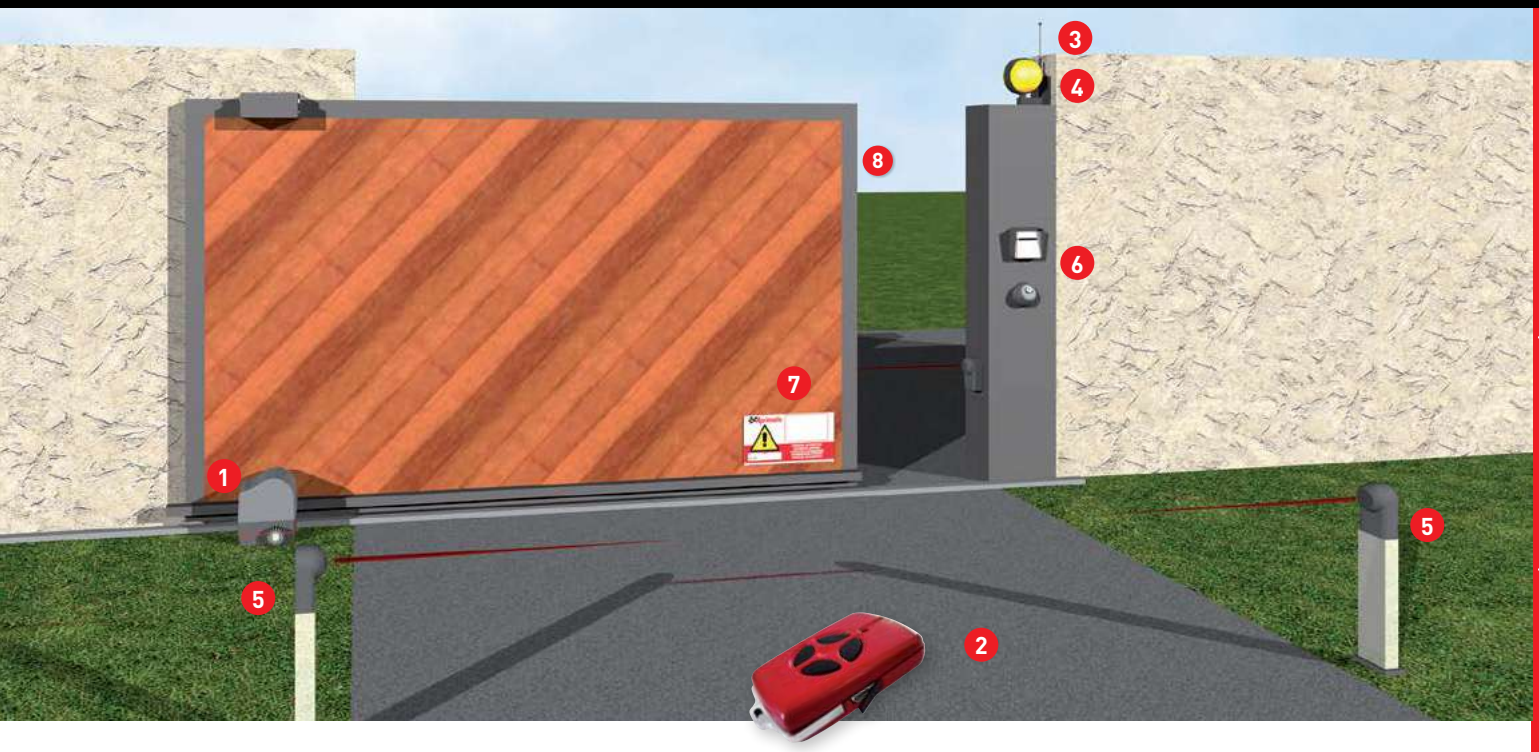

NOTE: For equipment and control, safety and warning devices, see the optional accessories indicated for the specific operator.

NOTE: For more devices, see the section "Control units and Indicators" in this catalogue (refer to the initial index).

EXTERNAL MOUNTING AUTOMATION SYSTEMS

	MODEL	USE	POWER SUPPLY	CYCLES DAY	MAX. WING WEIGHT	CLUTCH	PAGE
	AT 88 T	I I	380 Vac	Continuous use	4000 kg	Mechanical	68
	AT 90 T **AT 92 T**	I I	380 Vac 380 Vac	Continuous use Continuous use	8000 kg 12000 kg	Mechanical Mechanical	70

KEY (R) RESIDENTIAL (C) CONDOMINIUM (I) INDUSTRIAL

NOTE: The data provided refer to correctly installed products undergoing regular maintenance.

ONDA 624

NEW · Safety Tested · 24 Vcc · 600 kg · i218

Low-voltage gear motor for sliding gates. Residential use for wings up to 600 kg, condominium use for wings up to 400 kg.

TECHNICAL DATA

MAIN POWER SUPPLY	230 Vac - 50 Hz
MOTOR POWER SUPPLY	24 Vdc
MAX. WING WEIGHT	600 kg
CYCLE NUMBER	100 cycles/day
PROTECTION DEGREE	IP44
MAX. ABSORBED POWER	100 W
MAX. ABSORBED CURRENT	5 A
MAX. THRUST FORCE	650 N
MAX. LINEAR SPEED	10 m/min
OPERATING TEMPERATURE	-20° +55° C
HEIGHT OF PINION FROM GROUND	62 mm
WEIGHT OPERATOR	8 Kg

Complies with the current safety standards as regards to obstacle detection and inversion of movement in accordance with **EN12453** and **EN 12445 (*)**.
The electronic torque adjustment combined with encoder technology guarantees a gradual approach during opening and closing movements.

Continuity of operation guaranteed, in the event of power supply failure, by a set of optional batteries which may be fitted inside the operator casing.

Sturdy and reliable thanks to the die-cast aluminium casing.

New SC24 control unit with radio receiver 433,92Mhz built-in.

Worm screw gear motor with aluminium body and on-board electronic control unit. Equipped with adjustable-height foundation plate.

Emergency release lever with customised key, for use during power supply failures.

(*) Product certified under ideal installation conditions.

IDEAL INSTALLATION

ITEM NUMBER	DESCRIPTION	Q.ty
41102/001	ONDA 624 with on-board SC24 control unit with radio receiver 433Mhz built-in	1
41905/024	TM4L - 433.92 MHz four-channel transmitter	N
41929/001	Ant 433 - 433.92 MHz antenna with 4.5 m coaxial cable and ground connection	1
41840/010	ET2N-W - 24 V LED flashing light	1
41830/007	PC12E - Wall-mounted key-operated switch	1
41812/010	ER48 12-24V - Pair of photocells	1
41180/064	CP- Aprimatic 10m plastic rack with steel core and mounts module 4)	1

NOTE: Use of a safety edge is recommended; see section "Control units and Indicators".

N: Based on specific installation requirements

ITEM NUMBER	DESCRIPTION
41102/001	ONDA 624 with on-board on-board SC24 control unit with radio receiver 433Mhz built-in (rack required)

ITEM NUMBER	OPTIONAL ACCESSORIES
41180/064	CP - APRIMATIC 10 m plastic rack with steel core and mounts (module 4)
41102/050	Battery kit (no. 2 batteries of 12V - 1.3Ah)
41629/051	Basic wired battery charger (cable for connecting the output control unit to the battery)
41629/052	Battery charger card with charge control for a long battery life. Device + connection cables.

NOTE: For the available safety and signalling devices and for installation accessories, see section "Control units and indicators" in this catalogue (refer to the initial index).

ONDA 623

600 kg

i 218

Low-voltage gear motor for sliding gates. Residential use for wings up to 600 kg, condominium use for wings up to 400 kg.

TECHNICAL DATA	
MAIN POWER SUPPLY	230 V - 50 Hz
MAX. WING WEIGHT	600 kg
CYCLE NUMBER	100 cycles/day
PROTECTION DEGREE	IP44
MAX. ABSORBED POWER	1,3 A
MAX. ABSORBED CURRENT	250 W
MAX. THRUST FORCE	650 N
MAX. LINEAR SPEED	10 m/min
OPERATING TEMPERATURE	-20° +55° C
HEIGHT OF PINION FROM GROUND	62 mm
WEIGHT OPERATOR	8 Kg

Complies with the current safety standards as regards to obstacle detection and inversion of movement in accordance with **EN12453** and **EN 12445 (*)**. The electronic torque adjustment combined with encoder technology guarantees a gradual approach during opening and closing movements.
Available as optional, the new magnetic encoder system for the compliance the sliding gates, to concern on the safety and anti-crushing (only for the 230V motors).

Continuity of operation guaranteed, in the event of power supply failure, by a set of optional batteries which may be fitted inside the operator casing.

Sturdy and reliable thanks to the die-cast aluminium casing.

Worm screw gear motor with aluminium body and on-board electronic control unit. Equipped with adjustable-height foundation plate.

Emergency release lever with customised key, for use during power supply failures.

(*) Product certified under ideal installation conditions.

IDEAL INSTALLATION ONDA 623

ITEM NUMBER	DESCRIPTION		Q.ty
41623/001	ONDA 623 with SC230 on-board control unit and 433Mhz receiver		1
41180/064	CP- Aprimatic 10m plastic rack with steel core and mounts module 4)		1
41700/801	EKK-24V Elettrokit	**Item numbers included in the kit**	1
	433.92 MHz antenna kit	**41929/003**	
	Two TM4L - 433.92 MHz four-channel transmitters	**41905/024**	
	ET2N-W- 24V Led flashing light	**41840/010**	
	ER48 12-24V Pair of photocells	**41812/010**	
	PC12E Wall-mounted key-operated switch	**41830/007**	
	Signal panel		

NOTE: Use of a safety edge is recommended; see section "Control units and Indicators".

NEW

ITEM NUMBER	ACCESSORIES
41127/050	ENC - magnetic encoder for gearmotors 230V ONDA series

ITEM NUMBER	ACCESSORIES
41180/064	CP- Aprimatic 10m plastic rack with steel core and mounts module 4)
41180/063	CZ - Aprimatic 4m galvanised steel rack with mounts (module 4)

NOTE: For the available safety and signalling devices and for installation accessories, see section "Control units and indicators" in this catalogue (refer to the initial index).

ONDA 800 / 801 E

Gear motor for sliding gates, for condominium use with wings up to 500 kg and for residential use with wings up to 800 kg.

TECHNICAL DATA	
MAIN POWER SUPPLY	230 V - 50 Hz
MAX. WING WEIGHT	800 kg (Z16) 500 kg (Z20)
CYCLE NUMBER	100 cycles/day
PROTECTION DEGREE	IP44
ABSORBED POWER	260 W
THRUST FORCE	1250 N (Z16) 1000 N (Z20)
MAX. LINEAR SPEED	9,5 m/min (Z16) 12,0 m/min (Z20)
OPERATING TEMPERATURE	-20° +70° C
HEIGHT OF PINION FROM GROUND	58 mm
WEIGHT OPERATOR	11 Kg

ONDA 800 - with mechanical clutch for anti-crushing safety and preset for integrating the control unit.

ONDA 801E - with SC 230 on-board control unit and electronic clutch.

ONDA 801E / 800E - for residential gates up to 800 kg, or condominium gates up to 500 kg.

Self-locking worm screw gear motor with anodised aluminium body. Steel gears with permanent lubrication. No electric lock required.

Equipped with a practical key release for manual operation in the event of power supply failure.

Z20 20-teeth pinion available for installation in the gear motor for applications requiring faster automation speed.

Available as optional, the new magnetic encoder system for the compliance the sliding gates, to concern on the safety and anti-crushing (only for the 230V motors).

IDEAL INSTALLATION - ONDA 800

ITEM NUMBER	DESCRIPTION		Q.ty
41127/029	ONDA 800 Z16 Motor with mechanical clutch		1
41180/063	CZ - APRIMATIC 4 m galvanised steel rack with mounts (module 4)		1
41615/801	ESS 433 - 433.92 MHz swing gate Elettroset	**Item numbers included in the kit**	1
	SC230 control unit with 433.92MHz buit-in radio receiver	**41626/001**	
	433.92 MHz antenna kit	**41929/003**	
	ER48 12-24V Pair of photocells	**41812/010**	
	ET2N-W 24V led flasing light	**41840/010**	
	Two TM4L - 433.92 MHz four-channel transmitters	**41905/024**	
	PC12E Wall-mounted key-operated switch	**41830/007**	
	Signal panel		

NOTE: Use of a safety edge is recommended; see section "Control units and Indicators".

IDEAL INSTALLATION - ONDA 801E

ITEM NUMBER	DESCRIPTION		Q.ty
41127/023	ONDA 801 E Z16 Motor with electronic clutch and on-board SC230 electronic card with built-in 433.92 MHz receiver		1
41180/063	CZ - APRIMATIC 4 m galvanised steel rack with mounts (module 4)		1
41700/801	EKK-24V Elettrokit	**Item numbers included in the kit**	1
	433.92 MHz antenna kit	**41929/003**	
	Two TM4L - 433.92 MHz four-channel transmitters	**41905/024**	
	ET2N-W- 24V Led flashing light	**41840/010**	
	ER48 12-24V Pair of photocells	**41812/010**	
	PC12E Wall-mounted key-operated switch	**41830/007**	
	Signal panel		

NOTE: Use of a safety edge is recommended; see section "Control units and Indicators".

ITEM NUMBER	DESCRIPTION
41127/029	ONDA 800 Z16 (rack required) Gear motor with mechanical clutch and 16-teeth pinion, preset for the integration of SC230control unit
41127/023	ONDA 801E Z16 (rack required) Gear motor with on-board SC230 control unit with built-in radio, electronic clutch and 16-teeth pinion

ITEM NUMBER	ACCESSORIES
NEW **41127/050**	ENC - magnetic encoder for gearmotors 230V ONDA series
41126/051	PF 500/800 - Foundation plate (package with 4 pieces)
41180/064	CP - APRIMATIC 10 m plastic rack with steel core and mounts (module 4)
41180/063	CZ - APRIMATIC 4 m galvanised steel rack with mounts (module 4)
41127/101	Z20 - 20-teeth pinion

NOTE: For the available safety and signalling devices and for installation accessories, see section "Control units and indicators" in this catalogue (refer to the initial index).

AT 80 / AT 80 E

1200 kg

i 219

Sliding gate gear motor. Intensive use for wings up to 800 kg and residential use for wings up to 1200 kg.

TECHNICAL DATA	
MAIN POWER SUPPLY	230 V - 50 Hz
MAX. WING WEIGHT	1200 kg (Z16) 800 kg (Z20)
CYCLE NUMBER	200 cycles/day
PROTECTION DEGREE	IP44
ABSORBED POWER	330 W
THRUST FORCE	1400 N (Z16) 1120 N (Z20)
MAX. LINEAR SPEED	9,5 m/min (Z16) 12,0 m/min (Z20)
OPERATING TEMPERATURE	-20° +70° C
LUBRICANT QUANTITY	1,25 Lt
LUBRICANT TYPE	AprimOil SPIRAX
HEIGHT OF PINION FROM GROUND	70 mm
WEIGHT OPERATOR	13 Kg

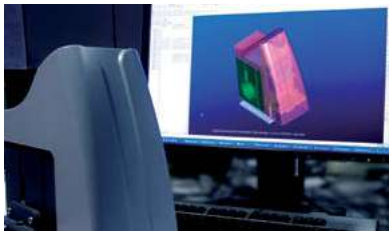

Anti-crushing device with wet mechanical clutch.

Emergency release lever with customised key for gate release and an effective anti-intrusion protection.

Wet gear motor with self-locking reduction unit for lockless application.

Maximum reliability thanks to steel gears and permanent system lubrication.

It can be secured to the ground both via a fixed and a tilting support.

The latter allows operation even when the guide is not on a perfectly level surface, thus preserving mechanical parts from operational stress.

SC230 electronic control unit on board of the operator. On AT80E model only.

IDEAL INSTALLATION - AT 80 WITHOUT CONTROL UNIT

ITEM NUMBER	DESCRIPTION		Q.ty
41120/021	AT80 Z16 Gear motor without control unit		1
41180/063	CZ - APRIMATIC 4 m galvanised steel rack with mounts (module 4)		1
41615/801	ES 433.92 MHz sliding gate Elettroset	**Item numbers included in the kit**	1
	SC230 control unit with 433.92MHz built-in radio receiver	**41626/001**	
	433.92 MHz antenna kit	**41929/003**	
	ER48 12-24V Pair of photocells	**41812/010**	
	ET2N-W 24V flashing light	**41840/010**	
	Two TM4L 433.92 MHz four-channel transmitters	**41905/024**	
	PC12E Wall-mounted key-operated switch	**41830/007**	
	Signal panel		

NOTE: Use of a safety edge is recommended; see section "Control units and Indicators".

IDEAL INSTALLATION - AT 80E WITH CONTROL UNIT

ITEM NUMBER	DESCRIPTION		Q.ty
41120/023	AT80E Z16 Gear motor with SC230 on-board control unit with built-in 433.92 MHz receiverv		1
41180/063	CZ - APRIMATIC 4 m galvanised steel rack with mounts (module 4)		1
41700/801	EKK-24V Elettrokit	**Item numbers included in the kit**	1
	433.92 MHz antenna kit	**41929/003**	
	ER48 12-24V Pair of photocells	**41812/010**	
	ET2N-W - 24V Led flashing light	**41840/010**	
	Two TM4L 433.92 MHz four-channel transmitters	**41905/024**	
	PC12E Wall-mounted key-operated switch	**41830/007**	
	Signal panel		

NOTE: Use of a safety edge is recommended; see section "Control units and Indicators".

ITEM NUMBER	DESCRIPTION
41120/023	AT 80E YZ16 (rack required) Gear motor with on-board SC230 control unit with built-in radio, 16-teeth pinion and electromechanical limit stop
41120/021	AT 80 YZ16 (rack required) Gear motor preset for the integration of SC 230 control unit, 16-teeth pinion and electromechanical limit stop

NOTE: Each installation requires an IF 80 or IB 80 package.

ITEM NUMBER	ACCESSORIES
41120/051	IF80 - Fixed installation package
41120/052	IB80 - Tilting installation package
41120/050	PF80 - Foundation plate for masonry installation (package with 4 pieces)
41180/063	CZ - APRIMATIC 4 m galvanised steel rack with mounts (module 4)
41127/101	Z20 - 20-teeth pinion

NOTE: For the available safety and signalling devices and for installation accessories, see section "Control units and indicators" in this catalogue (refer to the initial index).

ONDA 2000 / 2001

i 220

Gear motor for sliding gates with wings from 1000 up to 2000kg. Intensive use.

TECHNICAL DATA

MAIN POWER SUPPLY	230 V - 50 Hz
MAX. WING WEIGHT	2000 kg
CYCLE NUMBER	1000 cycles/day
PROTECTION DEGREE	IP44
ABSORBED POWER	700 W
THRUST FORCE	2570 N
MAX. LINEAR SPEED	9,5 m/min
OPERATING TEMPERATURE	-20° +70° C
LIMIT STOP	Electromechanical
PINION	Z16
LUBRICANT TYPE	AprimOil SPIRAX
WEIGHT OPERATOR	18KG

For residential use, up to 2,000 kg, or condominium use up to 1,000 kg.

ONDA 2000 - with mechanical clutch for anti-crushing safety without on-board electronic control unit.

ONDA 2001 - with on-board SC 230 device and electronic control unit.

Worm screw gear motor with permanent lubrication and anodised aluminium body.

Practical lever release with customised key for emergency operations.

Available as optional, the new magnetic encoder system for the compliance the sliding gates, to concern on the safety and anti-crushing (only for the 230V motors).

NOTE: Due to the high power of the motor, properly evaluate the system risk analysis.

IDEAL INSTALLATION - ONDA 2000 Z16 MOTOR WITH MECHANICAL CLUTCH

ITEM NUMBER	DESCRIPTION		Q.ty
41125/007	ONDA 2000 Z16 Motor with mechanical clutch		1
41180/063	CZ - Aprimatic 4m galvanised steel rack with mounts (module 4)		1
41615/801	ES 433.92 MHz sliding gate Elettroset	**Item numbers included in the kit**	1
	SC230 control unit with 433.92MHz receiver built-in	**41626/001**	
	433.92 MHz antenna kit	**41929/003**	
	ER48 12-24V Pair of photocells	**41812/010**	
	ET2N-W - 24V led flasing light	**41840/010**	
	Two TM4L 433.92 MHz four-channel transmitters	**41905/024**	
	PC12E Wall-mounted key-operated switch	**41830/007**	
	Signal panel		

NOTE: Use of a safety edge is recommended; see section "Control units and Indicators".

IDEAL INSTALLATION - ONDA 2001 E Z16 MOTOR WITH ELECTRONIC CLUTCH

ITEM NUMBER	DESCRIPTION		Q.ty
41125/005	ONDA 2001 E Z16 Motor with electronic clutch and on-board SC 230 control unit with built-in 433.92 MHz receiver		1
41180/063	CZ - Aprimatic 4m galvanised steel rack with mounts (module 4)		1
41700/801	EKK-24V Elettrokit	**Item numbers included in the kit**	1
	433.92 MHz antenna kit	**41929/003**	
	ER48 12-24V Pair of photocells	**41840/010**	
	ET2N-W- 24V Led flashing light	**41840/010**	
	Two TM4L 433.92 MHz four-channel transmitters	**41905/024**	
	PC12E Wall-mounted key-operated switch	**41830/007**	
	Signal panel		

NOTE: Use of a safety edge is recommended; see section "Control units and Indicators".

ITEM NUMBER	DESCRIPTION
41125/007	ONDA 2000 Z16 (rack required) Gear motor with mechanical clutch and 16-teeth pinion, preset for the integration of the control unit
41125/005	ONDA 2001 E Z16 (rack required) Gear motor with on-board SC 230 control unit with built-in 433.92 MHz receiver, electronic clutch and 16-teeth pinion

ITEM NUMBER	OPTIONAL ACCESSORIES
NEW **41127/050**	ENC - magnetic encoder for gearmotors 230V ONDA series
41125/050	PF2000 - Foundation plate
41180/063	CZ - Aprimatic 4m galvanised steel rack with mounts (module 4)

NOTE: For the available safety and signalling devices and for installation accessories, see section "Control units and indicators" in this catalogue (refer to the initial index).

AT 88 T

i 221

Automation for
industrial sliding gates.
Intensive use.

TECHNICAL DATA	AT 88T
MAIN POWER SUPPLY	Three-phase 230/400 3~50 Hz
MAX. GATE WEIGHT	4000 kg
PROTECTION DEGREE	IP44
MOTOR POWER	1,2Kw
MAX ABSORBED CURRENT	2,7A (a 400 V)
NO. OF MOTOR/PINION REVS g/1'	1400/33
DRIVE SPEED m/1'	9
PINION MODULE	4 mm
OPERATING TEMPERATURE	-15° +60° C
LUBRICANT BRAND	MOBIL SHC 632
WEIGHT OPERATOR	50 Kg

AT 88T MOTOR

These motors are designed to drive very heavy sliding gates. Intended for an intensive use, they guarantee a high degree of reliability

Adjustable dry clutch between the motor and gear unit, for the preservation of mechanical parts in case of obstacles to the movement of the gate.

Toothed pinion suitable for 4 mm rack module. Rack available in 1 m items with adjustment slots and spacers for gate installation. Bidirectional lever mechanical limit stop.

The electromechanical unit consists of a ventilated three-phase motor, coupled to a steel worm screw gear unit and a bronze gear.

Emergency manual operation thanks to a device for trip disengaging mounted on the gear unit, easily operable by rotating the lever.

The gear motor is encased in a stainless steel protective box with ABS inspection door that can be opened with a key.

IDEAL INSTALLATION - AT 88T

ITEM NUMBER	DESCRIPTION	Q.ty
41124/001	AT 88T Three-phase gear motor	1
41615/009	SC380-4 control without receiver	1
41923/009	RRSE - Unico 433.92 MHz Memory System receiver	1
41929/001	ANT 433 433.92 MHz Antenna	1
41811/001	ER2N Pair of photocells	1
41841/001	ET22 230V flashing light	1
41905/024	TM4L - 433.92 MHz four-channel transmitter	N
41180/063	CZ - Aprimatic 4m galvanised steel rack with mounts (module 4)	1
41830/007	PC12E Wall-mounted key-operated switch	1

NOTE: Use of a safety edge is recommended; see section "Control units and Indicators".

N: Based on specific installation requirements

ITEM NUMBER	DESCRIPTION
41124/001	AT 88T - Three-phase gear motor (with foundation plate)

ITEM NUMBER	ACCESSORIES
NEW **41615/009**	SC380-4 Electronic control unit in sealed APRIMATIC container (IP55) with 4 operating modes: automatic, semi-automatic, dead-man operation, suitable for a three-phase (230/380 V - 50 Hz) operator with max. power 4000W
41180/063	CZ - Aprimatic 4m galvanised steel rack with mounts (module 4)
41850/002	CF1M - Straight safety edge 1.5 m
41850/003	CF2M - Straight safety edge 2 m
41850/004	CF3M - Straight safety edge 3 m

NOTE: The use of a safety edge is recommended.

NOTE: For the available safety and signalling devices and for installation accessories, see section "Control units and indicators" in this catalogue (refer to the initial index).

AT 90 T / AT 92 T

i 222

Automation for
industrial sliding gates.
Intensive use.

TECHNICAL DATA	AT 90T	AT 92T
MAIN POWER SUPPLY	Three-phase 230/400 V ~ 3 50 HZ	Three-phase 230/400 V ~ 3 50/60 HZ
MAX. GATE WEIGHT	8000 Kg	12000 Kg
PROTECTION DEGREE	IP55	IP44
MOTOR POWER	1500 W	3000 W
MAX. ABSORBED CURRENT	3,5 A (a 400 V)	6,8 A (a 400 V)
NO. OF MOTOR/PINION REVS G/1'	1400/23	1400/17
DRIVE SPEED M/1'	8	9
PINION MODULE	5 mm	8 mm
OPERATING TEMPERATURE	-15° +50° C	-15° +50° C
LUBRICANT	MOBIL SHC 632	TIVELA OIL SC320
WEIGHT OPERATOR	90 Kg	245 Kg

MOTORE AT 90T

These motors are designed to drive very heavy sliding gates. Intended for an intensive use, they guarantee a high degree of reliability

Adjustable dry clutch between the motor and gear unit, for the preservation of mechanical parts in case of obstacles to the movement of the gate.

Toothed pinion suitable for 5 mm rack module (Mod. AT 90T) and 8 mm (Mod. AT 92T). Rack available in 1 m items with adjustment slots and spacers for gate installation.
Bidirectional lever mechanical limit stop.

The electromechanical unit consists of a ventilated three-phase motor, coupled to a steel worm screw gear unit and a bronze gear.

Emergency manual operation thanks to a device for trip disengaging mounted on the gear unit, easily activated by rotating the lever (for Mod. AT 90T).

The gear motor is encased in a stainless steel protective box with stainless steel inspection door that can be opened with a key.

IDEAL INSTALLATION - AT 90T

ITEM NUMBER	DESCRIPTION	Q.ty
41134/001	AT 90T Three-phase gear motor	1
41615/010	SC380-5,5 three-phase control unit without receiver	1
41923/011	RRSE-E- Unico Memory System 433.92 MHz receiver	1
41929/001	ANT433 433.92 MHz antenna	1
41811/001	ER2N Pair of photocells	1
41841/001	ET22 230V flashing light	1
41905/024	TM4L - 433.92 MHz four-channel transmitter	N
41180/061	CZ Module 5 steel rack (1M)	N (order N metres based on gate length)

NOTE: The same items can be used when installing an AT 92T gear motor, swapping the rack with module 8.

NOTE: Use of a safety edge is recommended; see section "Control units and Indicators".

N: Based on specific installation requirements

ITEM NUMBER	DESCRIPTION
41134/001	AT 90T - Three-phase gear motor (with foundation plate)
41134/003	AT 92T - Three-phase gear motor (with template and foundation plate)
NEW **41615/010**	SC380-5,5 three-phase unit (without receiver)

ITEM NUMBER	ACCESSORIES
41180/061	CZ - Rack rail in galvanised steel, module 5 (1 m with joints) - for AT 90T
41180/062	CZ - Rack rail in galvanised steel, module 8 (1 m with screws) - for AT 92T
41850/002	CF1M - Straight safety edge 1.5 m
41850/003	CF2M - Straight safety edge 2 m
41850/004	CF3M - Straight safety edge 3 m

NOTE: The use of a safety edge is recommended.

NOTE: For the available safety and signalling devices and for installation accessories, see section "Control units and indicators" in this catalogue (refer to the initial index).

04.

UP-AND-OVER, SECTIONAL, FOLDING DOORS

ALZO
AT 50
MATIC-BOX 800
MATIC-BOX 1200

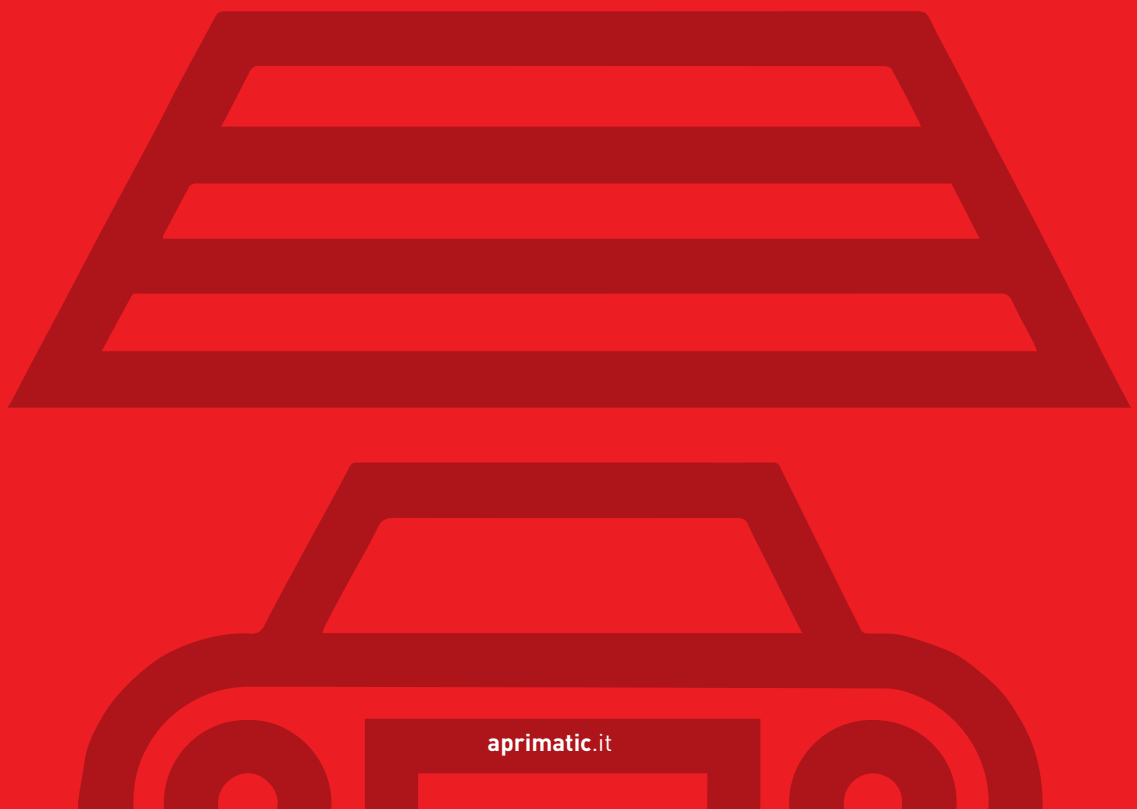

UP-AND-OVER / SECTIONAL DOORS

TYPES

UP-AND-OVER DOOR WITH COUNTERWEIGHTS OR SPRINGS (with door automation)

Door equipped with balancing system with counterweights or springs. On opening and closing, the door may wholly fall within or partly protrude. Application with single or double motor for heavy doors or up-and-over doors with built-in pedestrian door.

Electromechanical
ALZO
TWIN ALZO

Hydraulic
AT 50
TWIN AT50

COUNTERWEIGHT-BALANCED UP-AND-OVER DOOR (with drive or spring operator)

Door equipped with balancing system with counterweights or springs.
On opening and closing, the door may wholly fall within or partly protrude.

Electromechanical
MATIC-BOX 800
MATIC-BOX 1200

SECTIONAL DOOR

Door equipped with spring balancing system. Consisting of many horizontal panels hinged together. When opening, the door falls entirely within the garage.

Electromechanical
MATIC-BOX 800
MATIC-BOX 1200

TYPICAL SYSTEM COMPOSITION

1) Operator: device allowing, with an external power supply, to move a door.
2) Control unit: electronic unit for handling the operator movement.
3) Transmitter: wireless equipment that transmits information to the control unit.
4) Antenna: device that increases the reception of the signals sent by the transmitter.
5) Flashing light: light signalling that the gate is moving.
6) Pair of photocells: safety devices stopping the gate movement in the presence of obstacles.
7) Control unit: allows activation of gate movement through a mechanical or electronic key.
8) Safety edge: Sensitive edge used to prevent the risk of crushing due to electric door movement. In case of contact, the automation system inverts motion and prevents damage to people and property.

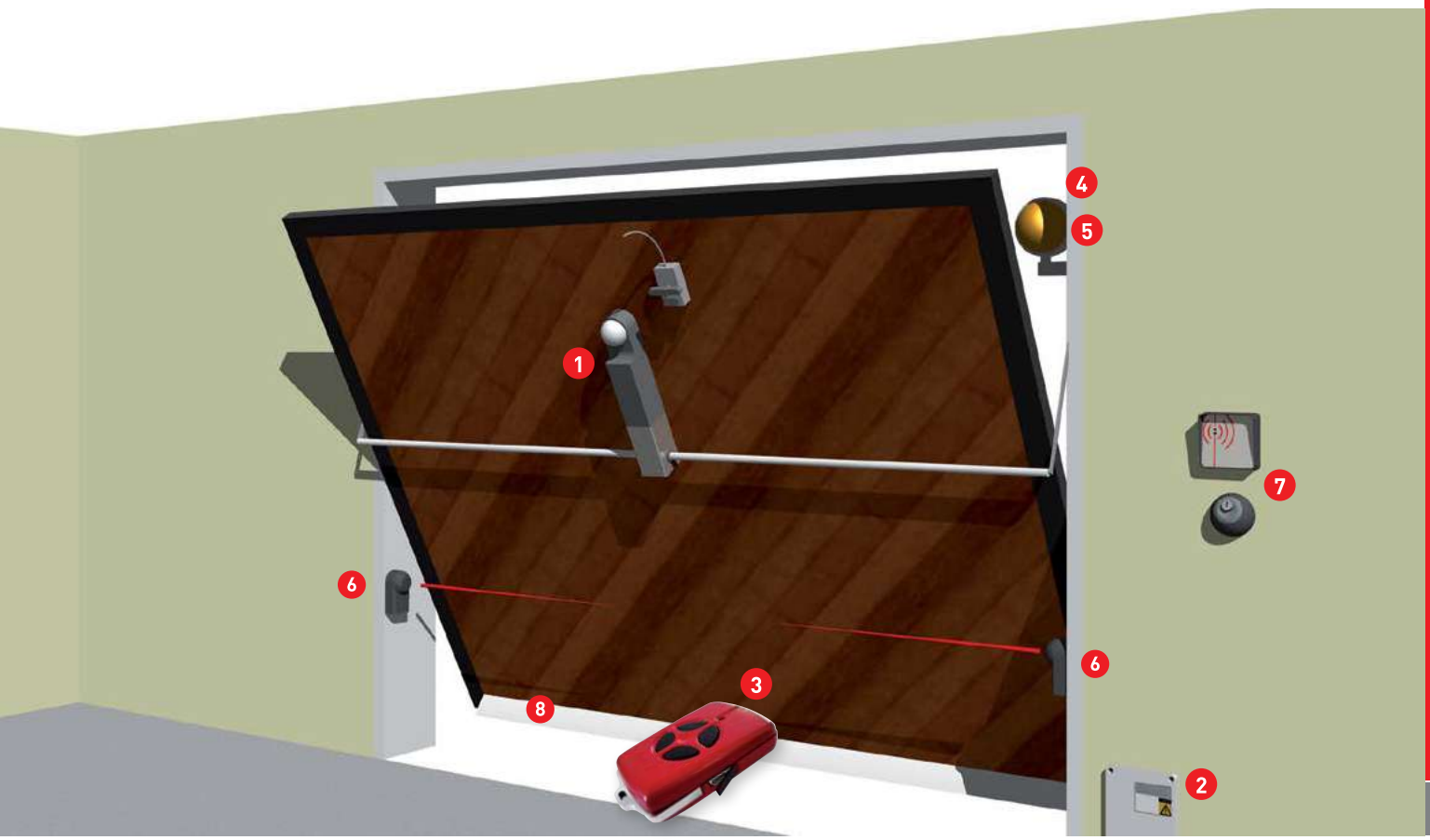

REFERENCE LAYOUT FOR UP-AND-OVER DOOR SYSTEM

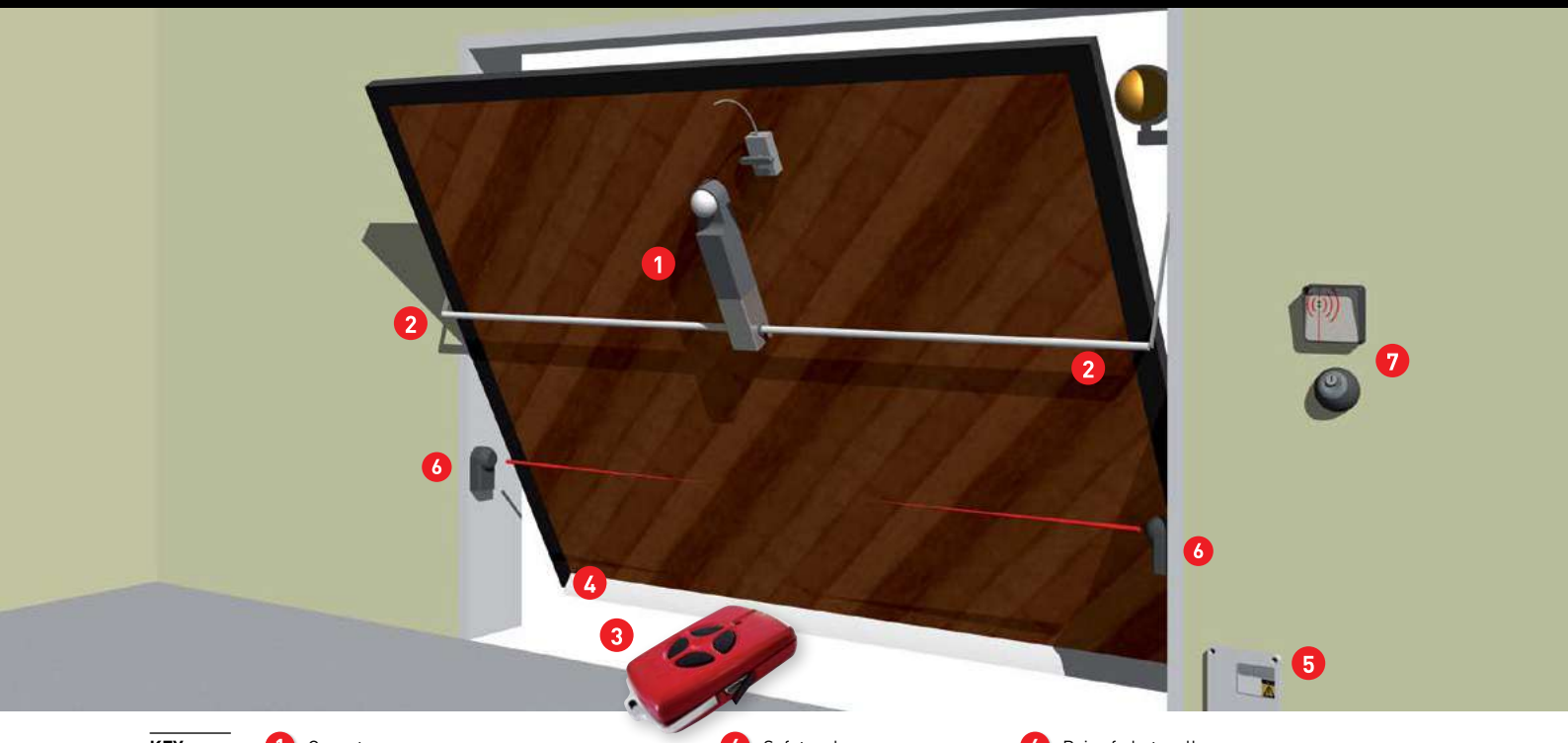

KEY

1. Operator
2. Pair of curved arms / curved arm
3. Transmitter
4. Safety edge
5. Electronic control unit
6. Pair of photocells
7. Control device

CHOOSING THE RIGHT PRODUCT

AUTOMATION SYSTEMS FOR COUNTERWEIGHT-BALANCED UP-AND-OVER DOORS

	MODEL	USE	CYCLES PER DAY	DOOR DIMENSION	SAFETY	TECHNOLOGY	PAGE
	ALZO	R	50	3,5 x 3,0 m	A*	Electromechanical	78
	TWIN ALZO	R	50	5,0 x 3,0 m	A*	Electromechanical	78
	AT 50	R C	150	3,5 x 3,0 m	Bypass valves	Hydraulic	80
	TWIN ALZO	R C	150	5,0 x 3,0 m	Bypass valves	Hydraulic	80

REFERENCE LAYOUT FOR SECTIONAL DOORS / COUNTERWEIGHT-BALANCED UP-AND-OVER DOORS

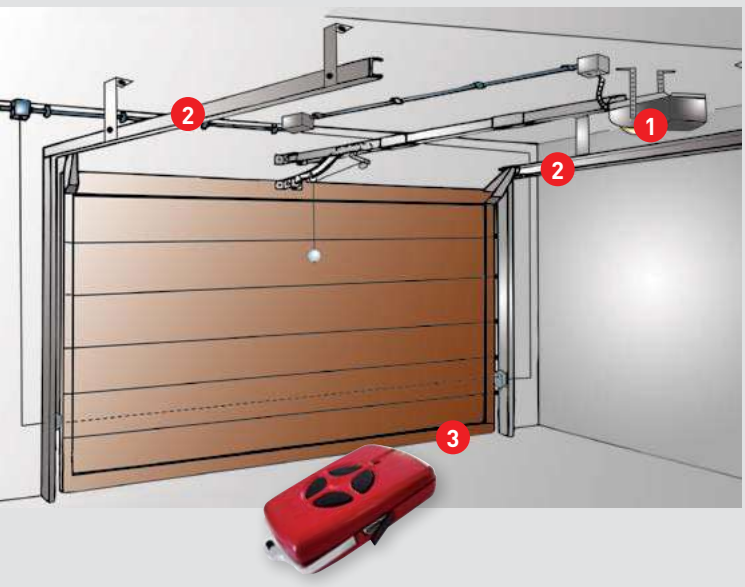

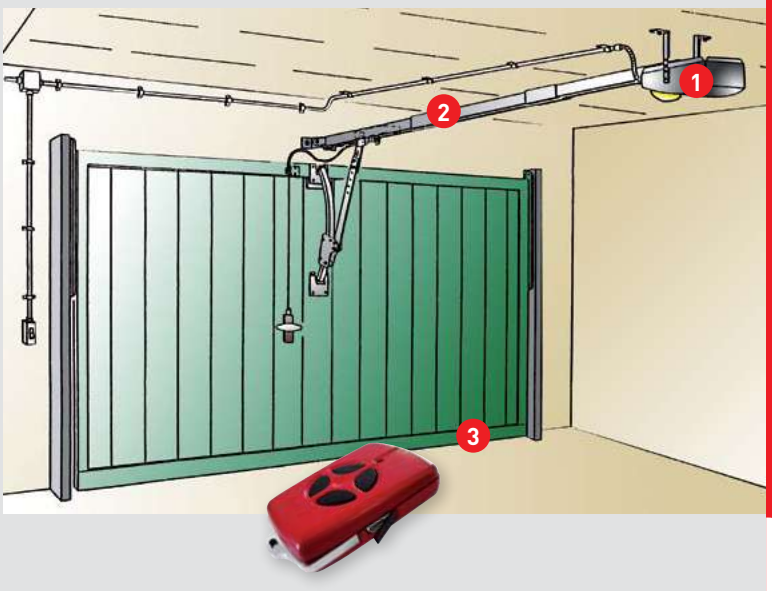

NOTE: For equipment and control, safety and warning devices, see the optional accessories indicated for the specific operator.

NOTE: For more devices, see the section "Control units and Indicators" in this catalogue (refer to the initial index).

DRIVEN AUTOMATION SYSTEMS FOR SECTIONAL AND UP-AND-OVER DOORS

	MODEL	USE	CYCLES PER DAY	DOOR DIMENSION	SAFETY	TECHNOLOGY	PAGE
	MATIC-BOX 800**	R	30	10/12 mq	A*	Electromechanical	82
	MATIC-BOX 1200**	R	30	14-18mq	A*	Electromechanical	82

KEY R RESIDENTIAL C CONDOMINIUM I INDUSTRIAL

*A -Anti-crushing
**Suitable for counterweight-balanced up-and-over doors if equipped with curved arm.

NOTE: The data provided refer to correctly installed products undergoing regular maintenance.
NOTE: The choice depends on the force required to move the frame and not on its size.

ALZO

i 222

Electromechanical operator
for up-and-over doors
Residential use.

TECHNICAL DATA

MAIN POWER SUPPLY	230 V - 50 Hz
NOMINAL TORQUE	450 Nm
INTERMITTENT USE	50%
SHEET DIMENSION	3,5 x 3 m single motor 5 x 3 m double motor
PROTECTION DEGREE	IP44
ABSORBED POWER	250 W
ABSORBED CURRENT	1,6 A
OPERATING TEMPERATURE	-20° +60° C
OPENING TIME	17 s
OVERLOAD INTERVENTION	150° C
WEIGHT OPERATOR	9 Kg

Self-locking gear motor, keeping the up-and-over door closed even in the absence of an electric lock.

External emergency release (optional) for accessing the garage in case of power supply failure.

High-quality materials:
steel transmission parts die-cast aluminium gear motor body and ABS protection hood with IP44 protection degree.

Maximum anti-crushing safety for the lower edge of the door, thanks to the on-board electronic control unit equipped with electronic torque adjustment and anti-crushing system (which can be disabled) with sensitive edges.

Timed courtesy light built into the operator to light up the garage during opening and closing.

Slowdown system for a soft approach of the door during opening and closing, thus avoiding noise and mechanical stress to the structure.

One of the best operators in the market.
Developing a 450 Nm torque, it allows the automation of counterweight-balanced up-and-over doors with size:
- 3.5 x 3 m using only one motor;
- 5 x 3 m, or up-and-over with built-in pedestrian door using two motors.

IDEAL INSTALLATION FOR SINGLE MOTOR (max. sheet dim. 3.5x3 m)

ITEM NUMBER	DESCRIPTION		Q.ty
41210/002	EM51 OPERATOR with T3EC on-board control device (without receiver)		1
41923/009	RRSE - Unico 433.92 MHz receiver		1
41905/024	TM4L - 433.92 MHz four-channel transmitter		N
41210/058	Pair of plasma-cut curved arms		1
41210/062	HARDWARE KIT	**Item numbers included in the Kit**	1
	Two TZ - Ø25mmx3 galvanised pipes with 1.8 m pre-welded bushes	**41210/068**	
	ST180 - 180 cm sheet fixing bracket	**41210/061**	

NOTE: The installation can be completed by adding a flashing light
N: Based on specific installation requirements

IDEAL INSTALLATION FOR DOUBLE MOTOR (max. sheet dim. 5x3 m)

ITEM NUMBER	DESCRIPTION	Q.ty
41210/002	EM51 OPERATOR with T3EC on-board control device (without receiver)	1
41210/001	EM51 SLAVE OPERATOR Including a pair of 20 cm pipes with splined bush	1
41210/069	Pair of straight arms, with quick coupling (required for double motor installation)	1
41210/061	ST180 - Sheet fixing bracket L= 180 cm	2
41923/009	RR SE - Unico 433.92 MHz receiver	1
41905/024	TM4L - 433.92 MHz four-channel transmitter	N

NOTE: The installation can be completed by adding a flashing light
N: Based on specific installation requirements.

ITEM NUMBER	DESCRIPTION
41210/002	EM51 T3EC OPERATOR - T3EC on-board electronic control unit (without receiver) Aprimatic signal panel
41210/001	EM51 SLAVE OPERATOR - Including a pair of 20 cm pipes with splined bush

ITEM NUMBER	OPTIONAL ACCESSORIES
41840/010	ET2N-W-24V led flashing light
41812/010	ER48 12-24V Pair of photocells
41210/054	SS EM 51 - Single external emergency release
41210/055	SD EM 51 - Double external emergency release
41201/052	Pair of straight telescopic arms
41201/051	Pair of curved telescopic arms
41210/068	TZ - 1.8 m Ø 25 mm x 3 galvanised pipe with pre-welded bushes
41210/061	ST180 - 180 cm sheet fixing bracket
41210/067	PST - Sheet fixing bracket extension
41850/001	CF3MS - 3.0 m straight safety edge (thin and specific for garage doors)

NOTE: Also application requires a rebalancing of the door (see instructions).
NOTE: For the available safety and signalling devices and for installation accessories, see section "Control units and indicators" in this catalogue (refer to the initial index).

AT 50

i 223

Hydraulic operator
for up-and-over doors.
Residential, condominium
and intensive use.

TECHNICAL DATA	AT50B7
MAIN POWER SUPPLY	230 V - 50 Hz
NOMINAL TORQUE AT 40 BAR	320Nm
SHEET DIMENSION	3,5 x 3 m single motor 5 x 3 m double motor
PROTECTION DEGREE	IP53
ABSORBED POWER	250 W
NOMINAL TORQUE AT 40 BAR	320 Nm
OPERATING TEMPERATURE	-20°+60° C
OPENING TIME	13 s approx..
MAX. OPERATING PRESSURE	40 bar
PUMP CAPACITY	1 Lt/min
OIL QUANTITY	1,3 Lt
WEIGHT WITH OIL	13 kg
OIL TYPE	AprimOil
SLOWDOWN	With T3E unit
WEIGHT OPERATOR	10 Kg

Maximum anti-crushing safety thanks to the sensitive edges (optional) combined with maximum pressure relief valves that limit the maximum value of the hydraulic pressure in the presence of obstacles (adjustable during installation).

Ideal for heavy workloads in the presence of large-sized up-and-over doors.

Locks on opening and closing (double lock): the door remains shut without installing further locks.

AT 50 can be easily installed without modifying the up-and-over doors.

Very high resistance to shocks and stress during operation thanks to the ductile cast iron body.

Great hydraulic sealing thanks to internal scrapers.

Silent and regular performance guaranteed by polyurethane seals and P.T:E. guide rings.

IDEAL INSTALLATION FOR SINGLE MOTOR (max. sheet dim. 3.5x3 m)

ITEM NUMBER	DESCRIPTION	PCS
41200/005	AT50B7 Operator	1
41625/003	T3E - Electronic control unit	1
41923/009	RR SE - Unico 433.92 MHz superheterodyne receiver	1
41905/024	TM4L - 433.92 MHz four-channel transmitter	N
41210/069	Pair of quick-fit straight arms	1
41210/068	TZ - 1.8 m Ø 25 mm x 3 galvanised pipe with pre-welded bushes	2
41201/056	Pair of 30x15x1.5 mm tubular upright supports - 2.5 m bars	1

NOTE: The installation can be completed by adding a flashing light

N: Based on specific installation requirements

IDEAL INSTALLATION FOR DOUBLE MOTOR (max. sheet dim. 5x3 m)

ITEM NUMBER	DESCRIPTION	PCS
41200/005	AT50B7 Operators	2
41625/003	T3E - Electronic control unit	1
41923/009	RR SE - Unico 433.92 MHz superheterodyne receiver	1
41905/024	TM4L - 433.92 MHz four-channel transmitter	N
41210/069	Pair of quick-fit straight arms	1
41201/055	Pair of 20 cm pipes with pre-welded splined bushes	1
41201/056	Pairs of tubular upright supports 30x15x1.5 mm - 2.5 m bars	2

NOTE: The installation can be completed by adding a flashing light

N: Based on specific installation requirements

ITEM NUMBER	DESCRIPTION
41200/005	AT 50B7 Operator
41625/003	T3E - Electronic control unit

ITEM NUMBER	OPTIONAL ACCESSORIES
41840/010	ET2N-W -24V led flashing light
41812/010	ER48 12-24V Pair of photocells
41201/050	ALZO/AT 50 slowdown limit stop unit
41200/050	SS AT 50 - AT 50 Single external emergency release
41201/051	Pair of curved telescopic arms
41201/052	Pair of straight telescopic arms
41201/055	Pair of 20 cm pipes with pre-welded splined bushes
41850/001	CF3MS - 3.0 m straight safety edge (thin and specific for garage doors)

NOTE: AT 50 application requires a rebalancing of the door (see instructions).

NOTE: For the available safety and signalling devices and for installation accessories, see section "Control units and indicators" in this catalogue (refer to the initial index).

MATIC BOX 800 / 1200

24 Vdc · 800 N · 1200 N · i 223

Low-voltage electromechanical operator for sectional and counterweight-balanced up-and-over doors. Residential use.

TECHNICAL DATA	800	1200
MAIN POWER SUPPLY	230V AC 50/60Hz	230V AC 50/60Hz
MOTOR POWER SUPPLY	24DC	24DC
OUTPUT VOLTAGE	80W	120W
TRACTION FORCE	800N	1200N
OPENING/CLOSING SPEED	0.15 m/s	0.15 m/s
LAMP	LED	LED
LIGHTING TIME	3 minutes	3 minutes
DECODING	Rolling code	Rolling code
BATTERY (optional)	2 batteries 12V 3,5A	2 batteries 12V 3,5A
RADIO FREQUENCY	433.92MHz	433.92MHz
OPERATING TEMP.	-20°C / +50°C	-20°C / +50°C
RELATIVE HUMIDITY	‹90%	‹90%
MAXIMUM DOOR SIZE	10/12 m^2	14/18 m^2
DIMENSIONS (mm)	400x250x150	400x250x150
WEIGHT OPERATOR	5 Kg	5 Kg

Maximum anti-crushing safety thanks to the on-board electronic control unit equipped with auto reverse safety system when an obstacle is detected while closing the gate and to the use of sensitive edges.

The kit MATIC-BOX can be used for sectional doors and when installed with the accessory adapter arm, even to automate up-and-over doors.

Slowdown system for a soft approach of the door during opening and closing, thus avoiding noise and mechanical stress to the structure.

Timed courtesy light built into the operator to light up the garage during opening and closing.

The **pre-assembled guides** optimise installation time, while the encoder-controlled stroke simplifies the configuration phase.

Silent and resistant thanks to the belt drive.

Continuity of operation guaranteed, in the event of power supply failure, by a set of optional batteries which may be fitted inside the operator casing. Possibility of manual operation via the release system (optional).

IDEAL INSTALLATION - MATIC-BOX 800

ITEM NUMBER	DESCRIPTION	Q.ty
41243/800	MATIC-BOX 800 Operator with on-board unit and 433.92 MHz radio receiver, nr.2 TML four channel transmitter (guide NOT included -see "Guides and accessories)	1
41905/024	TM4L - 433.92 MHz four-channel transmitter	N

N: Based on specific installation requirements

IDEAL INSTALLATION OF COUNTERWEIGHT-BALANCED UP-AND-OVER DOORS - MATIC-BOX 1200

ITEM NUMBER	DESCRIPTION	Q.ty
41243/810	MATIC-BOX 1200 Operator with on-board unit and 433.92 MHz radio receiver, nr.2 TM4L four channel transmitter (guide NOT included -see "Guides and accessories)	1
41241/056	Adapter arm for counterweight-balanced up-and-over doors	1
41905/024	TM4L - 433.92 MHz four-channel transmitter	N

N: Based on specific installation requirements

ITEM NUMBER	DESCRIPTION	Max. sheet dimension
41243/800	MATIC-BOX 800	10/12 m^2
41243/810	MATIC-BOX 1200	14/18 m^2

The two packages include:
The MATIC-BOX MATIC-BOX Operator with on-board unit and 433.92 MHz radio receiver, nr.2 TM4L four channel transmitter

ITEM NUMBER	MATIC-BOX GUIDES AND ACCESSORIES
41241/056	Adapter arm for counterweight-balanced up-and-over doors
41243/068	3,30m Belt drive rail 2part (2 pcsx1,65m)
41243/060	3.90m Belt drive rail 2 part (2pcs x 1.95m)
41243/070	Manual release without handle
41840/010	ET2N-W -24V led flashing light
41812/010	ER48 12-24V Pair of photocells

NOTE: For the available safety and signalling devices and for installation accessories, see section "Control units and indicators" in this catalogue (refer to the initial index).

05.

TRAFFIC BARRIERS

HARRIER E
HARRIER LUX

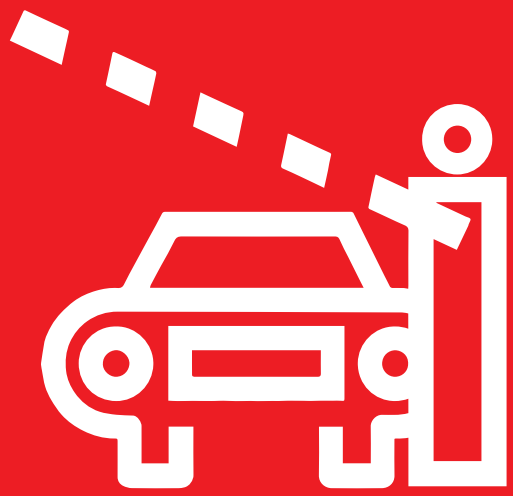

TRAFFIC BARRIERS

TYPES

SINGLE OR DOUBLE BARRIERS FOR CONDOMINIUM AND INTENSIVE USE

24V barriers used for the management of continuous use car parks in large apartment buildings, companies, or even private car parks with frequent passage of vehicles during the day.

Electromechanical
Harrier E
Harrier LUX

TYPICAL SYSTEM COMPOSITION

1) Operator: device with an external power supply designed for access control.
2) Control unit: electronic unit for handling the operator movement.
3) Transmitter: wireless equipment that transmits information to the control unit.
4) Flashing light: light signalling that the gate is moving.
5) Pair of photocells: safety devices stopping the gate movement in the presence of obstacles.
6) Control unit: allows activation of gate movement through a mechanical or electronic key.

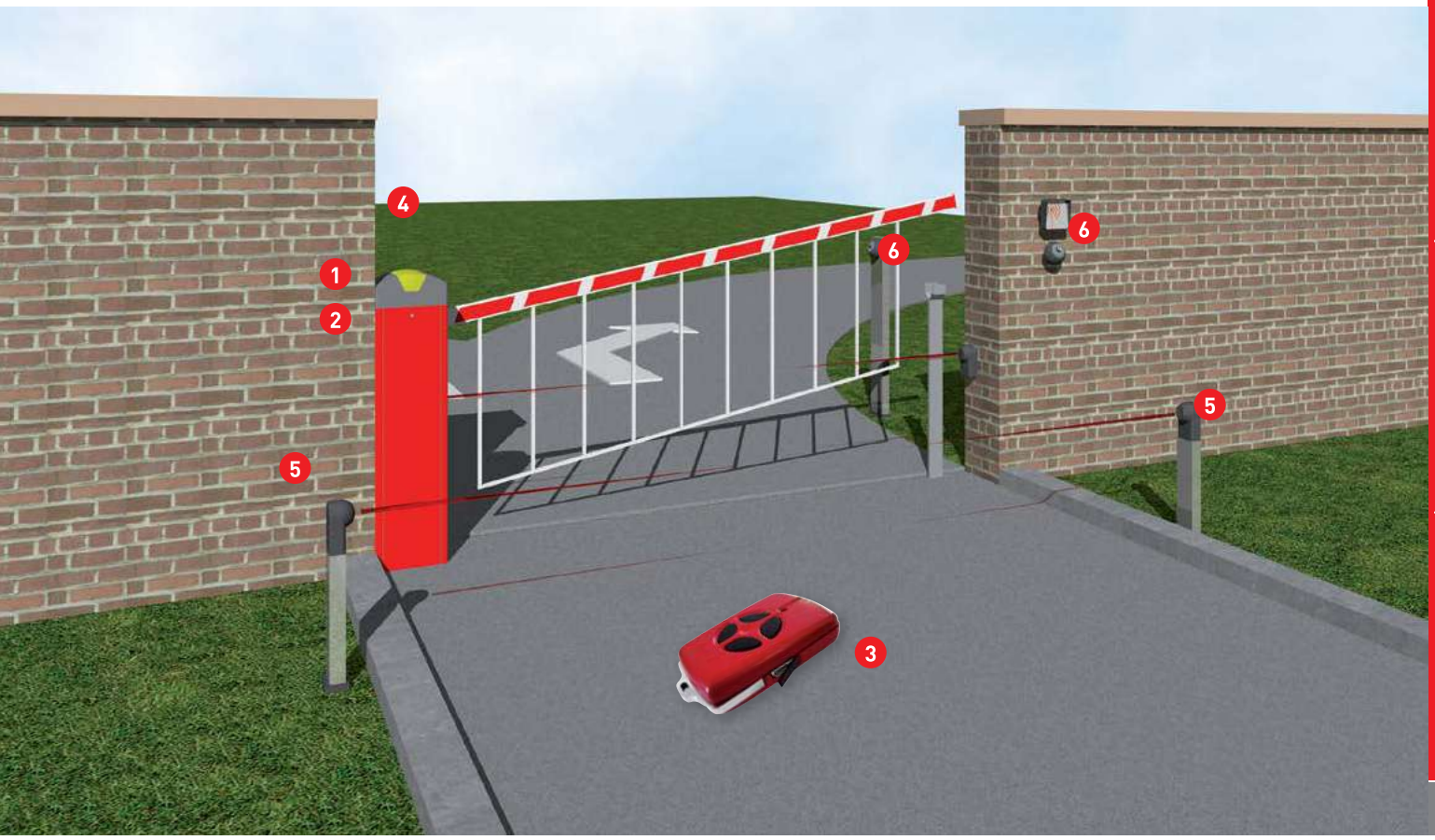

AUTOMATION SYSTEMS FOR TRAFFIC BARRIERS

KEY

1. Automation for bars
2. Electronic control unit
3. Transmitter
4. Flashing light
5. Pair of photocells
6. Control device: key-operated switch / presence reader / keyboard combination lock / card reader / magnetic keys

CHOOSING THE RIGHT PRODUCT

AUTOMATION SYSTEMS FOR TRAFFIC BARRIERS

	MODEL	USE	CYCLES PER DAY	CYCLES /H	BEAM MAX. LENGTH (M)	TECNOLOGY	PAGE
	HARRIER E40 **HARRIER E60**	R I	1400 500	40%	4m 6m	Electromechanical Electromechanical	90
	HARRIER LUX E40 **HARRIER LUX E60**	C I	1400 500	85%	4m 6m	Electromechanical Electromechanical	92

REFERENCE LAYOUT FOR BARRIER SYSTEM (BARRIER WITH SKIRT)

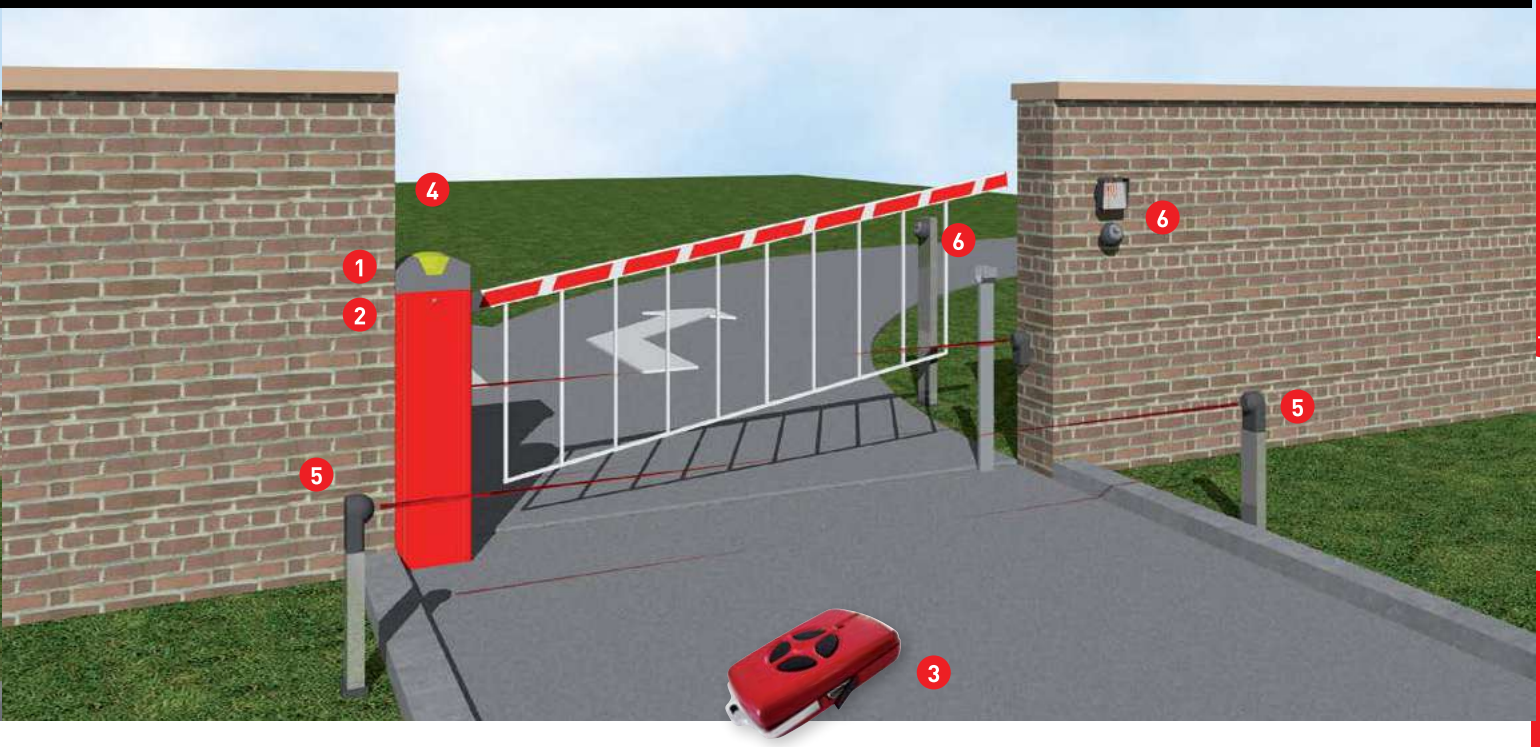

NOTE: For equipment and control, safety and warning devices, see the optional accessories indicated for the specific operator.

NOTE: For more devices, see the section "Control units and Indicators" in this catalogue (refer to the initial index).

Available as optional, the new magnetic encoder system for the compliance the sliding gates, to concern on the safety and anti-crushing (only for the 230V motors).

TRAFFIC BARRIERS - BEAMS

	90x25 Max length 4,5 m	Ø 80 Max length 6 m	Telescopic 4.5-6 m
ELECTROMECHANICAL BARRIERS			
Harrier E	●	●	●
Harrier LUX	●	●	●

KEY (R) RESIDENTIAL (C) CONDOMINIUM (I) INDUSTRIAL

* Beams with predisposition of accessories installation like shockproof rubber edge, Led lights strip kit, basculant pin. Accessories to be ordered for separate.

NOTE: The data provided refer to correctly installed products undergoing regular maintenance.

HARRIER

i 224

Electromechanical traffic barriers for vehicle passage from 2.5 to 6.0 m. Continuous use.

TECHNICAL DATA	LUX E40	LUX E60
MAIN POWER SUPPLY	230 Vca - 50 Hz	230 Vca - 50 Hz
OPENING TIME	2,5 s	9,5 s
MAX BEAM LENGTH	4,0 m	6,0 m
PROTECTION DEGREE	IP45	IP45
MAX. ABSORBED POWER	0,18 kW	0,18 kW
ABSORBED CURRENT	1,6 A	1,55 A
NOMINAL TORQUE	70 Nm	160 Nm
OPERATING TEMP.	-20° + 50° C	-20° + 50° C

Continuous use barrier, to meet any automation requirements, available in stainless steel and painted versions.

Easy changing of opening direction that can be carried out quickly by the technician during installation.

Available in 2 models painted (mod. E) equipped with Traffic electronic control unit with photocell test and torque adjustment.
Beams available with 90 x 25 mm profile and round Ø 80 mm.
Equipped with limit stop for opening and closing operations.
The mechanical slowdown is ensured by a crank and slotted link mechanism.

New photocell test function.
In order to increase automation safety, the Traffic control unit, equipped with Harrier barriers, allows to activate a new safety test function. Before each closure an operational test is carried out on the photocells and only if the test is successful the automation system proceeds to closing.

IDEAL INSTALLATION - HARRIER

ITEM NUMBER	DESCRIPTION	Solution A	Solution B
	HARRIER barrier ith 433.92MHz receiver and on-board Traffic control unit	1	2
41514/050	PF Harrier - Foundation plate	1	2
	Beam fixing flange	1	2
	Beam	1	2
	Spring (tobe selected based on beam type)	1	2
41905/024	TM4L 433.92MHz four-channel transmitter	N	N
41812/010	ER48 (12V-24V)- Pair of photocells	1	N
41830/007	PC12E - Wall-mounted key-operated switch	N	N
41830/055	CPC - PC12E column H=110cm	N	N
41514/057	FC HARRIER - Fork support	1	~

No.: Based on specific installation requirements.

ITEM NUMBER	DESCRIPTION	Beam Length
41514/002	HARRIER E40 Traffic control unit on-board	4,0 m
41514/003	HARRIER E60 Traffic control unit on-board	6,0 m

ITEM NUMBER	OPTIONAL ACCESSORIES
41514/057	FC HARRIER - Fork support from 2.5 m to 6.0 m
41504/055	PP - Articulated swinging tip
41590/106	Aprimatic stickers for Ø80 beam (package with 50 single stickers)
	SKIRT only for 90x25 beam profile:
41504/051	Vertical skirt module (module height 69 cm, quantity of vertical modules to order: beam length in metres multiplied by 2)
41504/052	Horizontal skirt module (centre distance 46 cm, quantity of horizontal modules to order: number of vertical modules minus 1)

ITEM NUMBER	ACCESSORI OBBLIGATORI
41514/050	PF HARRIER - Foundation plate
41514/051	Stainless steel fixing flange for 90 x 25 mm beam
41514/052	Stainless steel fixing flange for Ø80 mm beam
	90 x 25 BEAMS:
41518/002	- 2.5 m beam (see table for spring matching)
41518/003	- 3,0 m beam (see table for spring matching)
41518/004	- 3,5 m beam (see table for spring matching)
41518/005	- 4,0 m beam (see table for spring matching)
41518/006	- 4,5 m beam (see table for spring matching)
	Ø 80 BEAMS:
41522/001	- 3,0 m beam (see table for spring matching)
41522/002	- 6,0 m beam (see table for spring matching)
41523/001	- Telescopic beam from 4.5 m to 6 m (see table for spring matching)
	SPRINGS:
41514/053	- Harrier "Green" spring
41514/054	- Harrier "Blue" spring
41514/055	- Harrier "Red" spring

HARRIER: CHOOSING THE RIGHT PRODUCT

Beam and accessory type	Beam length								
	2 m	**2,5 m**	**3 m**	**3,5 m**	**4 m**	**4,5 m**	**5 m**	**5,5 m**	**6 m**
90 x 25 Beam	E40	E40	E40	E40	E40	E60			
90 x 25 Beam with swinging tip	E40	E40	E40	E40	E40	E60			
90 x 25 Beam with skirt		E40	E40	E40	E60	E60			
Ø 80 Round beam	E40	E40	E40	E40	E40	E60	E60	E60	E60
Round telescopic beam						E60	E60	E60	E60

NOTE: For the available safety and signalling devices and for installation accessories, see section. Control units and indicators. In this catalogue (refer to the initial index).

HARRIER LUX

i 224

Electromechanical traffic barriers for vehicle passage from 2.5 to 6.0 m. Continuous use.

TECHNICAL DATA	LUX E40	LUX E60
MAIN POWER SUPPLY	230 Vca - 50 Hz	230 Vca - 50 Hz
OPENING TIME	2,5 s	9,5 s
MAX BEAM LENGTH	4,0 m	6,0 m
PROTECTION DEGREE	IP45	IP45
MAX. ABSORBED POWER	0,18 kW	0,18 kW
ABSORBED CURRENT	1,6 A	1,55 A
NOMINAL TORQUE	70 Nm	160 Nm
OPERATING TEMP.	-20° + 50° C	-20° + 50° C

Continuous use barrier, to meet any automation requirements, available in stainless steel and painted versions.

Easy changing of opening direction that can be carried out quickly by the technician during installation.

Available in 2 models painted (mod. E) equipped with Traffic electronic control unit with photocell test and torque adjustment.
Beams available with 90 x 25 mm profile and round Ø 80 mm.
Equipped with limit stop for opening and closing operations.
The mechanical slowdown is ensured by a crank and slotted link mechanism.

New photocell test function.
In order to increase automation safety, the Traffic control unit, equipped with Harrier barriers, allows to activate a new safety test function. Before each closure an operational test is carried out on the photocells and only if the test is successful the automation system proceeds to closing.

IDEAL INSTALLATION - HARRIER

ITEM NUMBER	DESCRIPTION	Solution A	Solution B
	HARRIER barrier ith 433.92MHz receiver and on-board Traffic control unit	1	2
41514/050	PF Harrier - Foundation plate	1	2
	Beam fixing flange	1	2
	Beam	1	2
	Spring (tobe selected based on beam type)	1	2
41905/024	TM4L 433.92MHz four-channel transmitter	N	N
41812/010	ER48 (12V-24V)- Pair of photocells	1	N
41830/007	PC12E - Wall-mounted key-operated switch	N	N
41830/055	CPC - PC12E column H=110cm	N	N
41514/057	FC HARRIER - Fork support	1	~

No.: Based on specific installation requirements.

ITEM NUMBER	DESCRIPTION	Beam Length
41514/022	HARRIER LUX E40 Traffic control unit on-board	4,0 m
41514/023	HARRIER LUX E60 Traffic control unit on-board	6,0 m

ITEM NUMBER	OPTIONAL ACCESSORIES
41514/057	FC HARRIER - Fork support from 2.5 m to 6.0 m
41504/055	PP - Articulated swinging tip
41590/106	Aprimatic stickers for Ø80 beam (package with 50 single stickers)
	SKIRT only for 90x25 beam profile:
41504/051	Vertical skirt module (module height 69 cm, quantity of vertical modules to order: beam length in metres multiplied by 2)
41504/052	Horizontal skirt module (centre distance 46 cm, quantity of horizontal modules to order: number of vertical modules minus 1)

ITEM NUMBER	ACCESSORI OBBLIGATORI
41514/050	PF HARRIER - Foundation plate
41514/051	Stainless steel fixing flange for 90 x 25 mm beam
41514/052	Stainless steel fixing flange for Ø80 mm beam
	90 x 25 BEAMS:
41518/002	- 2.5 m beam (see table for spring matching)
41518/003	- 3,0 m beam (see table for spring matching)
41518/004	- 3,5 m beam (see table for spring matching)
41518/005	- 4,0 m beam (see table for spring matching)
41518/006	- 4,5 m beam (see table for spring matching)
	Ø 80 BEAMS:
41522/001	- 3,0 m beam (see table for spring matching)
41522/002	- 6,0 m beam (see table for spring matching)
41523/001	- Telescopic beam from 4.5 m to 6 m (see table for spring matching)
	SPRINGS:
41514/053	- Harrier "Green" spring
41514/054	- Harrier "Blue" spring
41514/055	- Harrier "Red" spring

HARRIER: CHOOSING THE RIGHT PRODUCT

Beam and accessory type	Beam length								
	2 m	2,5 m	3 m	3,5 m	4 m	4,5 m	5 m	5,5 m	6 m
90 x 25 Beam	E40	E40	E40	E40	E40	E60			
90 x 25 Beam with swinging tip	E40	E40	E40	E40	E40	E60			
90 x 25 Beam with skirt		E40	E40	E40	E60	E60			
Ø 80 Round beam	E40	E40	E40	E40	E40	E60	E60	E60	E60
Round telescopic beam						E60	E60	E60	E60

NOTE: For the available safety and signalling devices and for installation accessories, see section. Control units and indicators. In this catalogue (refer to the initial index).

06.

CONTROL DEVICES AND INDICATORS

ELECTRONIC CONTROL UNIT

ACCESS CONTROL MEMORY SYSTEM 433,92MHZ

INSTALLATION ACCESSORIES

ELECTRONIC CONTROL UNITS

Aprimatic control units ensure reliability and durability thanks to the careful design and selection of the best components available and offer the highest technological content, together with a variety of features. Prestigious third-party laboratories perform compliance testing required for EC marking and certify the compliance of the equipment with the requirements imposed by European standards for electrical safety and electromagnetic compatibility.

Top quality electronic and electromechanical components and careful circuit design for exceptional interference immunity.

Spike filters built onto the card for high protection against mains disturbances.

Voltage stabilisers dedicated to logic circuits and power on/reset circuits to protect against fluctuations and transient power failures.

Zero-crossing **power triacs** to minimise interference and to guarantee perfect operation and a long working life of the equipment.

Short circuit and overload **protection fuses** for 24Vdc transformers, motors and accessories.

Boards, circuits, power components and heat sinks all dimensioned to guarantee trouble-free operation even in continuous use at maximum nominal power.

Compact board size to leave plenty of room for wiring and to ensure easy installation and maintenance.

Numbered and mechanically polarised **removable terminal boards** to guarantee easy wiring and safe connections. Plug-in connectors for easy installation of receivers and optional boards.

Boxes fitted with locking devices operated by a special key supplied as standard, and seals with **IP55** protection degree for high resistance to atmospheric agents.

SWING GATE CONTROL UNITS				
	BUILT-IN	BA24	T4 POWER	BA230
R251 FM		●		
R251 FE		●		
FORTY				●
TWENTY				●
EM 73N			●	
ZT 70				●
ZT 71				●

SLIDE CONTROL UNITS				
	SC230	SC380-4	SC380-5,5	SC24
ONDA 624				●
ONDA623	●			
ONDA 800	●			
AT 80 E	●			
ONDA 2000-2001	●			
AT 88 T		●		
AT 90 T			●	
AT 92 T			●	

UP-AND-OVER CONTROL UNITS			
	T3 EC	T3 E	INTEGRATA
ALZO	●		
AT 50		●	
MATIC-BOX 800			●
MATIC-BOX 1200			●

BARRIER CONTROL UNITS	
	TRAFFIC
HARRIER E40	●
HARRIER E60	●
HARRIER LUX40	●
HARRIER LUX60	●

THE RANGE

	ITEM NUMBER	DESCRIPTION
	41628/001	BA230 - Electronic control unit for swing gates with one/two electromechanical or hydraulic 230 Vac operators, with electronic slowdown and torque control, built-in receiver, compatibility with all Aprimatic receiver modules
	41626/001	SC230 - Electronic control unit for swing gates with electromechanical 230 Vac operator, built-in receiver, compatibility with all Aprimatic receiver modules
	41625/003	T3E - Electronic control unit for up-and-over doors and bars with one/two electromechanical or hydraulic 230 Vac operators
	41600/001	T4 POWER - Electronic control unit for swing gates with one/two electromechanical 24 Vdc operators
	41629/001	BA24 - Electronic control unit for swing gates with one/two 24V electromechanical operators, with built-in receiver 433MHz, compatibility with all Aprimatic receiver modules. Possibility to manage the limit switch adjustment electronically by optional card 41629/050

* Until stocks last

ACCESSORIES

	ITEM NUMBER	DESCRIPTION
	41706/009	FR 220 - Mains filter for electronic control units to be used in case of mains disturbances
	41629/050	FC BA24 - card to manage electronic limit switch for R251 FE operators - for BA24 control unit
	41629/051	Basic wired battery charger (cable for connecting the output control unit to the battery)- for BA24 and SC24 control unit
	41629/052	Battery charger card with charge control for a long battery life. Device + connection cables. For BA24 and SC24 control unit.
	41629/053	Expansion module for electric lock - for BA24 control unit

CONTROL UNIT TECHNICAL SPECIFICATIONS

TECHNICAL DATA	BA230	SC230	BA24	SC24
POWER SUPPLY	Single phase 230 Vac (6% - 10%) - 50 Hz	Single phase 230 Vac (6% - 10%) - 50 Hz	Single phase 230 Vac (6% - 10%) - 50 Hz	Single phase 230 Vac (6% - 10%) - 50 Hz
MOTOR VOLTAGE	230 Vac	230 Vac	24 V	24 V
OPERATING TEMPERATURE	-20° +55° C	-20° +55° C	-20° +55° C	-20° +55° C
STORAGE TEMPERATURE	-40° +85° C	-40° +85° C	-40° +85° C	-40° +85° C
RELATIVE HUMIDITY	90% max. (non condensing)	90% max. (non condensing)	90% max. (non condensing)	90% max. (non condensing)
PROTECTION DEGREE	IP 55	IP 55	IP 55	IP 55

INPUTS				
Opening/Start	Yes	Yes	Yes	Yes
Closing	~	~	~	~
Pedestrian Start / Partial opening	Yes	Yes	Yes	Yes
Stop	Yes	Yes	Yes	Yes
Standard safety (photocell)	Yes	Yes	Yes	Yes
Additional safety	Yes	Yes	Yes	Yes
Limit stop	~	Yes	Yes, optional card	Yes
prepared for motor control with encoder	Yes	Yes	Yes	Yes

OUTPUTS				
Motor	2	1	2	1
Flashing light	Yes	Yes	Yes	Yes
Indicator light	Yes	Yes	Yes	Yes
Electric lock	Yes	~	Yes, with CN1	~
Courtesy light	~	~	~	~
Accessory 24 Vdc power supply	1 A	350mA	1A	300mA

SPECIAL FUNCTIONS				
Limit stop slowdown	~	~	~	~
Electronic slowdown	Yes	Yes	Yes	Yes
Anti-crushing	~	Yes, with encoder	Yes	Yes
Electronic torque control	Yes	Yes	Yes	Yes
Motor braking	Yes	Yes	~	Yes
Built-in 433.92 MHz superheterodyne receiver	Yes	Yes	Yes	Yes
safety tests	Yes	Yes	Yes	Yes

OPERATING MODES				
Automatic standard	Yes	Yes	Yes	Yes
Automatic super	Yes	Yes	Yes	Yes
Automatic with Stop	~	Yes	~	Yes
Semi-automatic with Stop	Yes	Yes	Yes	Yes
Semi-automatic Open/Close	~	~	~	~
Dead man	~	~	~	~

SETTINGS				
Operating time	~	~	~	~
Pause time	Yes	Yes	Yes	Yes
Wing delay on closing	Yes	~	Yes	~
Braking delay	Yes	Yes	Yes	Yes
Torque adjustment	Yes	Yes	Yes	Yes
Slowdown	Yes	Yes	Yes	Yes

TECHNICAL SPECIFICATIONS OF PROFESSIONAL CONTROL UNITS

TECHNICAL DATA	T3E	T4 POWER
POWER SUPPLY	Single phase 230 Vac (6% - 10%) - 50 Hz	
MOTOR VOLTAGE	230 Vac	230 Vac
OPERATING TEMPERATURE	-20° +55° C	-20° +55° C
STORAGE TEMPERATURE	-40° +85° C	-40° +85° C
RELATIVE HUMIDITY	90% max. (non condensing)	
PROTECTION DEGREE	IP 55	IP 55

INPUTS		
Opening/Start	Yes	Yes
Closing	Yes	~
Pedestrian Start / Partial opening	~	Yes
Stop	Yes	Yes
Standard safety (photocell)	Yes	Yes
Additional safety	Yes	Yes
Limit stop	Yes	~

OUTPUTS		
Motor	1	2
Flashing light	Yes	Yes
Indicator light	Yes	Yes
Electric lock	~	Yes
Courtesy light	Yes	Yes (1)
Accessory 24 Vdc power supply	300 mA	500 mA

SPECIAL FUNCTIONS		
Limit stop slowdown	Yes	Yes (2)
Electric slowdown	~	~
Anti-crushing	Yes	Yes
Electronic control of the torque	~	~
Motor braking	~	~
433 MHz built-in superheterodyne receiver	~	~

OPERATING MODES		
Automatic Standard	SÌ	SÌ
Automatic Super	~	~
Automatic with stop Stop	~	~
Semi-Automatic with stop	SÌ	SÌ
Semi-Automatic open/close	SÌ	~
Dead man	SÌ	~

SETTINGS		
Operating time	Yes	~
Pause time	Yes	Yes
Wing delay on closing	~	Yes
Braking delay	~	~
Torque adjustment	~	~
Slowdown	Yes	Yes

(1) With optional "Light Card"
(2) With optional "LS Card"

Elettroset and Elettrokit:
flexible and easy use for any automation system

COMPATIBILITY WITH APRIMATIC OPERATORS

ELETTROSET FOR SLIDING GATES / ELETTROKIT

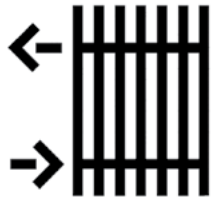

	ONDA 624	ONDA 623	ONDA 800	ONDA 801E	AT 80E	ONDA 2000	ONDA 2001
433.92 MHz sliding gate Elettroset	~	~	●	~	~	●	~
230 V 433.92 MHz Elettrokit	~	●	~	●	●	~	●
24 V 433.92 MHz Elettrokit	●	~	~	~	~	~	~

SWING GATE ELETTROSET / ELETTROKIT

	TWENTY	FORTY	R251	ZT 70	ZT 71
433.92 MHz swing gate Elettroset	●	●	~	●	●
24 V 433.92 MHz Elettrokit	~	~	●	~	~

ELETTROKIT FOR TRAFFIC BARRIERS

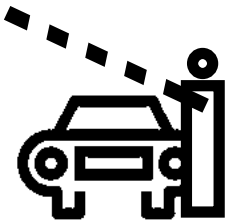

	HARRIER E	HARRIER LUX
230 V 433.92 MHz Elettrokit	~	~
24 V 433.92 MHz Elettrokit	●	●

Kit 41615/801
The kit includes:

ES 433.92 MHZ SLIDING GATE ELETTROSET

ITEM NUMBER	DESCRIPTION
41626/001	- SC230 Electronic control unit with 433.92MHz built-in radio receiver
41929/003	- 433.92 MHz antenna
41905/024	- Two TM4L 433.92 MHz four-channel transmitters
41840/010	- ET2N-W - 24V flashing light
41812/010	- ER48 12 - 24V pair of photocells
41830/007	- PC12E Wall-mounted key-operated switch - Signal panel

Price kit 41605/802.
The kit includes:

ESB 433.92 MHZ SWING GATE ELETTROSET	
ITEM NUMBER	**DESCRIPTION**
41628/001	- BA230 Electronic control unit with 433.92MHz built-in radio receviver
41929/003	- 433.92 MHz antenna kit
41905/024	- Two TM4L 433.92 MHz four-channel transmitters
41840/010	- ET2N-W - 24 V flashing light
41812/010	- ER48 12-24V pair of photocells
41830/007	- PC12E wall-mounted key-operated switch - Signal panel

Price kit 41700/800.
The kit includes:

ELETTROKIT EKK - 230 V	
ITEM NUMBER	**DESCRIPTION**
41929/003	- 433.92 MHz antenna kit
41905/024	- Two TM4L 433.92 MHz four-channel transmitters
41841/009	- ET20N - 230 V flashing light
41812/010	- ER48 12-24V Pair of photocells
41830/007	- PC12E Wall-mounted key-operated switch - Signal panel

Price kit 41700/801.
The kit includes:

ELETTROKIT EKK - 24 V	
ITEM NUMBER	**DESCRIPTION**
41929/003	- 433.92 MHz antenna kit
41905/024	- Two TM4L 433.92 MHz four-channel transmitters
41840/010	- ET2N-W - 24V LED flashing light
41812/010	- ER48 12-24V Pair of photocells
41830/007	- PC12E Wall-mounted key-operated switch - Signal panel

ACCESS CONTROL
MEMORY SYSTEM 433.92

MEMORY SYSTEM is the perfect radio access control solution for residential and industrial buildings, condominiums, car-parks, clubs, tourist ports and other community applications.
Technology, design and special dedicated access control functions make of Memory System an indispensable tool for advanced installers wishing to attract new customers by guaranteeing maximum security.
Memory System's access management functions make it far more than just another remote opening system and allow installations to be managed with far greater professionalism and skill.

4- and 14-KEY ROLLING CODE REMOTE CONTROLS
- A single code set from 72,000,000,000,000,000 possible combinations guarantees maximum user security.
- Attractive, stylish design in clear orange and red, and excellent ergonomics.

UNICO MEMORY SYSTEM RECEIVERS
Memory System receivers represent a unique hardware and software solution and can be expanded with up to 4 channels. They are suitable for all installation types and all access control requirements.
- 24 Vdc / Vac power supply, low consumption (20 mA max. in stand by).
- 104 dBm sensitivity, range from 40 to 120 m, front end radio frequency input filter.
- Hopping / rolling code decoding system.
- Radio code self-learning, beeper and flasher for code recognition.
- Standard removable memory module for up to 496 different codes. Optional module for over 2,000 codes.
- Standard relay output and relay modules for up to 3 expansion channels with 4 operating modes:
  pulse, hold, step-by-step, and timer with programmable 1-255 second duration.

APRIBASE1 CONFIGURATION BASE
A configuration base for remote controls, receivers and memory modules.
For use in conjunction with Apricot Manager software.
Complete with serial cable for connection to a PC.

APRICOT MANAGER ACCESS MANAGEMENT SOFTWARE
Apricot Manager software allows installers to make full, simple and intuitive use of all Memory System access management functions (user identification, lost code cancellation, hierarchic access control, etc.). The powerful database also allows you to archive all installation data for easier maintenance and warranty management etc.

REMOTE CONTROLS AND RECEIVERS

MEMORY SYSTEM 433.92 MHZ

	ITEM NUMBER	DESCRIPTION
	41905/004	TM4 - 433.92 MHz four-channel rolling code remote control
	41905/024	TM4L - 433.92Mhz four channel rolling code remote control with programming mode only MODE 0 - Standard
	41903/014	TR14 - 433.92 MHz 14-channel remote control with function keys that can be customised using the Apricot RC Customizer (until stocks last)
	41923/011	R R-SE-E - Unico 433.92MHz Memory System receiver (narrow-hand superheterodyne version) with built-in antenna.
	41929/001	ANT433 - 433.92 MHz antenna with 4.5 m coax cable and ground connection to be used as external antenna for 41923/009 receiver

ACCESSORIES FOR UNICO MEMORY SYSTEM RECEIVER 41923/009

	ITEM NUMBER	DESCRIPTION
	41923/052	CA41 - Expansion relay module for additional channel
	41923/053	CA43 - Expansion relay module for 3 additional channels
	41923/051	MM2 - Optional removable memory module up to 2,032 codes
	41923/059	CR44 - IP44 container for outdoor installation
	41706/007	CA2 – Expansion relay card (multiple package with 6 pcs.) (until stocks last)

PORTABLE HAND-HELD CONFIGURATION TOOLS

MEMORY SYSTEM

APRIBASE 1

CONFIGURATION BASE FOR REMOTE CONTROLS AND RECEIVERS

Customise Installer code and System code. Select access management functions. Select receiver output channel functions: pulse, hold, step-by-step and timer with 1-255 s programmable duration. Configure codes in memory modules or internal buffers. Configure remote controls with code customisation.

Read remote controls.
Identify, read, edit and transfer data to and from memory modules.
Cancel and disable memory module codes. Edit memory module function parameters. Program remote controls to duplicate, replace and disable codes by radio. Transfer data to and from PC.

	ITEM NUMBER	DESCRIPTION
	41930/001	Apribase 1 - Configuration base for memory modules and remote controls, complete with power unit and battery charger for configuration tool
	41930/102	Configuration cable for use with the TM4 41905/004 transmitter

APRICOT SOFTWARE

MEMORY SYSTEM

APRICOT MANAGER
is the software allowing to make full and simple use of all Memory System access management functions.
It is also a very useful tool allowing the installer to store customer and system data, thus facilitating maintenance operations, warranty management etc.
Using Apricot Manager does not require any particular IT skills. The window-based interface allows to perform all operations in a simple and intuitive way.

The software is supplied on a self-installing CD-ROM for PC with the following operating systems: Windows 95, 97, 2000, NT and Windows 10.
Any prohibited or potentially dangerous operations that could compromise the integrity of stored data are protected against operator errors. Access to the application is protected by a password that can be customised by the user.
Installation is protected with unique user number for each support.

COMMON ACCESSORIES

	ITEM NUMBER	DESCRIPTION
	41930/009	Apricot Manager, Windows XP version (multi-language) - Access control Software on self-installing CD-ROM only for PC with Windows XP operating system (No Notebook) always in combination with APRIBASE1. Request directly to the Aprimatic Customer Service.

Note : Ask availability to Customer Service.

OTHER ACCESS CONTROL SYSTEMS

PROXIMITY READERS

PR5
New access control reader with proximity-reader technology. The PR5 proximity reader works with the practical keychain Tag or ISO badge. PR5 is easily installed even on existing systems, replacing existing Aprimatic readers (CT/4, LB/4, ...) because it is mounted on the same mechanics.
Reading distance: 5 cm
Decoder connection: 3-wire bus.

TAG
Proximity keychain tag. Reading distance 5-8 cm.

	ITEM NUMBER	DESCRIPTION
	41820/001	PR5 - Proximity reader always in combination with the DEC/A 41820/050 decoding card
	41820/051	Proximity keychain TAG*, reading distance 5-8 cm
	41820/053	Proximity ISO badge TAG*

* For multiple purchases, always consider 1 extra TAG to be used as a Master.

DECODER

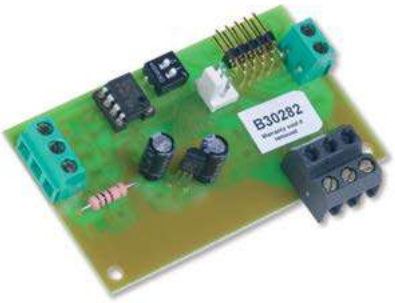

DEC/A
Decoder card with 256 codes for access control systems. Plug-in installation on Aprimatic control units. DEC/A is compatible with the PR5 proximity sensor; CT4 keypad and LB4 magnetic card reader. It replaces the previous range of Aprimatic decoders (DC/3 and DB/4).

TECHNICAL DATA	
POWER SUPPLY	24 Vdc ± 15%
INSTALLATION	Plug-in
NUMBER OF STORABLE CODES	256
READER CONNECTION	3-wire bus
DIMENSIONS	mm 105x65x30

ITEM NUMBER	DESCRIPTION
41820/050	DEC/A - Access control decoder with 256 codes

KEYBOARD COMBINATION LOCK

	ITEM NUMBER	DESCRIPTION
	41800/002	CT4 - Electronic keyboard combination lock with capacitive keypad for over 2 billion possible combinations, data transmission on serial cable between the keyboard and the decoding card ensures tamper-proof protection. Always in combination with the DEC/A 41820/050 decoding card.

ANTI-TAMPER KEY-OPERATED SWITCHES

	ITEM NUMBER	DESCRIPTION
	41830/006	PM12 - Two-contact metal key-operated switch for wall- or post-mounting
	41830/005	PC12 - Two-contact key-operated switch, accessories are available for recessed post- and wall-mounting and for external wall- and post-mounting
	41830/007	PC12E - Two-contact key-operated switch, accessories are available for recessed post and wall-mounting and for external wall and post-mounting

OPTIONAL ACCESSORIES FOR PR5; CT4; PC12; PM12 AND PC12E		CT4 41800/002	PR5 41820/001	PC12 41830/005	PM12 41830/006	PC12E 41830/007
41830/051 Galvanised post for key-operated switch (height 110 cm)	H= 110 cm	●	●	●		
41830/055 Aluminium post for PC12E key-operated switch (height 110 cm)	H= 110 cm					●
41830/053 Plastic container for recessed wall-mounting (pack of 6 pcs)		●	●	●		
41830/050 PC12 Metal container to be welded		●	●	●		
41830/054 Metal container to be welded (pack of 8 pcs)		●	●	●		

	ITEM NUMBER	DESCRIPTION
	41812/051	Base plate for 41830/051 or 41830/055 post mounting (pack of 4 pcs)
	41830/052	Bracket for metal pillar connection complete with screws to be matched to 41830/050 or 41830/054 metal container (pack of 4 pcs)

FLASHING LIGHTS

ET2N-W

ET 2N
ET 20N

ET 22

Antenna Kit

Yellow light indicators always visible at a distance in all weather conditions. Made of polycarbonate, they have a high degree of mechanical resistance to impacts.

ITEM NUMBER	DESCRIPTION
41840/006*	ET 2N - 24 V LED flashing light (internal white Led light)
41840/010*	ET2N-W - 24V LED flahing light (internal yellow Led light)
41841/009*	ET 20N - 230 V single flashing lamp
41841/001	ET 22 - 230 V double flashing lamp
41929/003	433.92 MHz antenna kit for ET2N-W and ET20N

* Sold without antenna kit

METAL DETECTOR

ITEM NUMBER	DESCRIPTION
41801/004	230 V single channel Loop Detector
41801/005	230 V two-channel Loop Detector

STRAIGHT EDGES

Straight edges consist of an aluminium support profile with a rubber profile containing the steel cable system for obstacle detection.

ITEM NUMBER	DESCRIPTION
41850/002	CF1M - 1.5 m straight safety edge
41850/003	CF2M - 2.0 m straight safety edge
41850/004	CF3M - 3.0 m straight safety edge
41850/001	CF3MS - 3.0 m straight safety edge (thin and specific for garage doors)

RADIO BAND

TBX 868 MHz

RU 868 MHz

Radio signalling devices of safety edges on automatic accesses. The Radio Band system establishes a constant dialogue between emitter and receiver at a frequency of 868 MHz, with continuous auto-test. Each receiver manages as many as 6 transmitters.

ITEM NUMBER	DESCRIPTION
41906/001	TBX 868 MHz - Radio Band transmitter
41926/001	RU 868 MHz - Radio Band receiver

OPTIONAL POWER UNITS

	ITEM NUMBER	DESCRIPTION
	41703/002	AL1 - 24 Vdc 500 mA power unit for independent control of electric locks, relays, CT4 keyboard combination lock, LB4 badge reader, with preset connection for DC/3 and DB/4 decoding cards
	41703/001	24 Vdc 250 mA power unit for safety devices and accessories - dimensions Ø 50 mm, h 30 mm, can be installed in 3-module flush-mounting boxes

PHOTOCELLS

ER12-24V - MINI PHOTOCELLS FOR WALL-MOUNTING

The ER12-24V photocells, with 20-m maximum range, are designed to be welded onto a post or wall-mounted and require no recess. The elements are self-aligning and therefore need no adjustments.
The transmitter and receiver are infrared-modulated and therefore unaffected by sun disturbances or bright direct light.
IP45 protection degree guaranteed by a special rubber seal that prevents water infiltrations.

ITEM NUMBER	DESCRIPTION
41812/008	ER12-24V - Modulated infrared photocells, 12-24 Vac power supply, for post- or wall-mounting

THE ER48 (12-24V) PHOTOCELLS

The ER48 (12-24V) photocells, with 15-m maximum range, are designed to be welded onto a post or wall-mounted and require no recess. The elements are self-aligning and therefore need no adjustments.

CODICE	DESCRIZIONE
41812/010	ER48 Modulated infrared photocells, 24 Vdc power supply, for post- or wall-mounting
41812/055	POWER FUL card - optional card used in case of accessories power supply output from 30V up to 60V

ER2N - PHOTOCELLS FOR RECESSED MOUNTING

ER2N photocells are equipped with an adjustment system that keeps them perfectly aligned. The modulated infrared beam makes them unaffected by sun disturbances or bright direct light.

ITEM NUMBER	DESCRIPTION
41811/001	ER2N - Modulated infrared photocells, 24 Vdc/Vac, for post mounting, recessed mounting or inside a container to be welded, max. range 40 m

REFLEX PHOTOCELLS

REFLEX - PHOTOCELL WITH REFLECTION OF POLARISED LIGHT FOR AUTOMATIC GATES.

Quick installation (on wall or support post) because it requires wiring only to one end of the gate; the round reflector must be secured at the same height as the photocell, on the other end of the gate.
Extremely reliable, because it can detect even highly reflective objects, such as mirrors or glossy surfaces.
Extremely easy photocell alignment: thanks to the analogue pointing LED, finding the best efficiency point is easy.
An optional accessory is available to protect the reflector from bumps and splashes.

ITEM NUMBER	DESCRIPTION
41810/002	REFLEX - Photocell with reflection of polarised light
41810/050	Reflector protection

TECHNICAL DATA

POWER SUPPLY	24 Vdc / Vac
MAX. ABSORBED POWER	3 W
MAX. RANGE RECEIVER RELAY CONTACT	1A - 24 Vdc for resistive loads; 0.5A - 24Vdc for non-resistive loads
INTERVENTION TIME	20 ms
MAX. OPERATING DISTANCE	nominal 12 m
OPERATING TEMPERATURE	-15° +70° C
RELATIVE HUMIDITY	‹ 90% non condensing
LIGHT REJECTION	20000 lux
PROTECTION DEGREE	IP 45
APPLICATION FIELD	**For use in protected environments (indoors, under porches, etc.)**

PHOTOCELLS

ER180B - BATTERY-POWERED PHOTOCELLS FOR WALL-MOUNTING

The ER180B photocells are equipped with lenses adjustable up to 180°. The TX transmitter is powered by 2 1.5V batteries (2 x AAA or LR03) with a maximum duration of 30 months. The RX receiver is powered by a 12-24 Vac/dc current through the system's electronic control unit.

ITEM NUMBER	DESCRIPTION
41817/001	ER180B - Battery-powered photocells, 12-24Vac/dc, for wall-mounting, max. range 20 m

DESCRIPTION OF OPTIONAL ACCESSORIES FOR REFLEX, ER12-24V, ER2N PHOTOCELLS

		ER48 41812/010	**ER12-24V** 41812/008	**REFLEX** 41810/002	**ER2N** 41811/001
41811/050 Galvanised post for ER2N photocells (height 51 cm)	H= 51 cm				●
41812/052 Galvanised post for ER12-24V photocells (height 44 cm)	H= 44 cm	●	●	●	
41812/050 Aluminium post for ER12-24V photocells (height 44 cm)		●	●	●	
41830/053 Plastic container for recessed wall-mounting (pack of 6 pcs)					●
41830/050 PC12 Metal container to be welded					●
41830/054 Metal container to be welded (pack of 8 pcs)					●

	ITEM NUMBER	DESCRIPTION
	41812/051	Foundation plate for 41811/050 or 41812/052 or 41812/050 posts (pack of 4 pcs)
	41830/052	Bracket for metal pillar connection complete with screws to be matched to 41830/050 or 41830/054 metal container (pack of 4 pcs)
	41812/054	ER12-24V 41812/008 or ER48 41812/010 fixing plates for corner- or wall- installation (pack of 10 pcs)

INSTALLATION ACCESSORIES FOR OPERATORS

ELECTRIC LOCK AND ACCESSORIES FOR EXTERNAL SWING GATE OPERATORS

	ITEM NUMBER	DESCRIPTION
	41080/008	ES3 - 12 Vac Electric lock complete with ground striker plate (requires CL1 or CL2)
	41080/005	CL1 - Single-wing cylinder (keys included)
	41080/004	CL2 - Double-wing cylinder (keys included)
	41080/001	CB3 - Striker plate for ES3

INSTALLATION ACCESSORIES

	ITEM NUMBER	DESCRIPTION
	41080/003	Welding plate for vertical fitting of ES3
	41080/002	Welding plate for horizontal fitting of ES3

INSTALLATION ACCESSORIES FOR OPERATORS

ACCESSORIES FOR EXTERNAL OPERATORS:

	ITEM NUMBER	DESCRIPTION
	41007/051	Front and rear bolt-on fixing plates

ACCESSORIES FOR UNDERGROUND OPERATORS:

	ITEM NUMBER	DESCRIPTION
	41056/056	TRA - Copper pipe with 8 mm ext. Ø (to be ordered in the desired length)
	41700/016	AprimOil (1 litre bottle) for hydraulic operators
	41700/014	AprimOil SPIRAX (1 litre bottle) for wet gear motors

SIGNAL PANEL

ITEM NUMBER	DESCRIPTION
APMA5845000	Aprimatic signal panel

01.
ROLLING SHUTTERS

AUTOMATION SYSTEMS FOR SHUTTER AND SUN BLINDS	TUBOLAR MOTORS: - REVOLUX SERIES
AUTOMATION SYSTEMS FOR ROLLING GATES	SERIES ROLLING SHUTTERS MOTORS: - RO-MATIC RS140 - RO-MATIC RS180 - RO-MATIC RS230 - RO-MATIC RD360 - RO-MATIC RD460

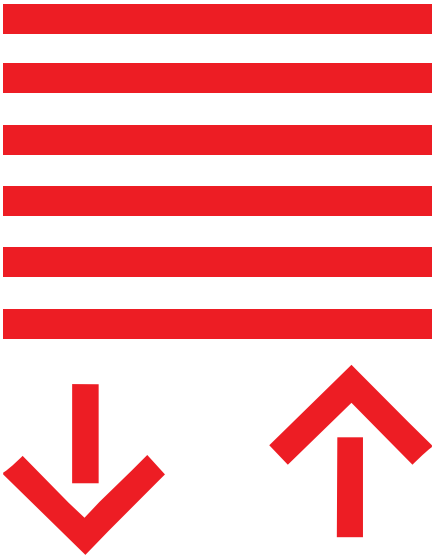

ROLLING SHUTTERS

TYPES

ROLLING SHUTTER MOTORS

Automation system used
for standard rolling shutters
or rolling shutters with container or with
adjustable slats.

Revolux 35 series
Revolux 35 Wireless series
Revolux 45 series
Revolux 45 MP
Revolux 45 Wireless series
Revolux 59 series
Revolux 59 MP series

BLIND MOTORS

Automation system used
for technicalfabric
curtains, which can be installed
in small premises as a sun-block,
or as a projector screen. The same can
be fitted on folding-arm sun blinds.

Revolux 35 series
Revolux 35 Wireless series
Revolux 45 series
Revolux 45 Wireless series
Revolux 59 series
Revolux 92 series

ROLLING GATE MOTORS

Automation system used for closing
premises used for residential and
commercial use.

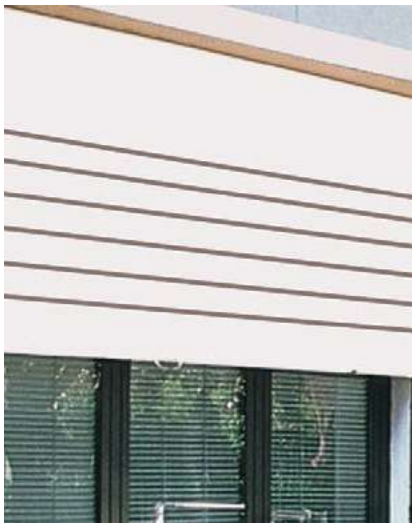

RO-MATIC RS140 series
RO-MATIC RS180 series
RO-MATIC RS230series
RO-MATIC RD360 series
RO-MATIC RD460 series

SHUTTERS AND SUN BLINDS: TYPICAL SYSTEM COMPOSITION

1) Operator with and without on-board receiver: device that allows powering a rolling shutter or sun blind with an external power supply.

2) Accessories for installing/fixing the motor.

3) Transmitter: wireless equipment that transmits information to the control unit.

Tubular operator on rolling shutter

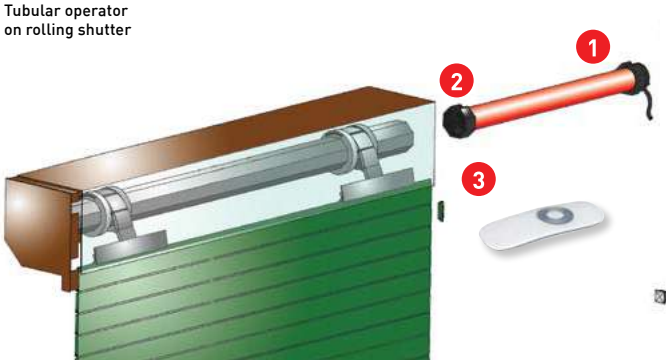

Tubular operator on sun blinds

ROLLING GATES: TYPICAL SYSTEM COMPOSITION

1) Operator: device for shutter operation with an external power supply.
2) Control unit: electronic unit for handling the operator movement.
3) Transmitter: wireless equipment that transmits information to the control unit.
4) Antenna: device that increases the reception of the signals sent by the transmitter.
5) Flashing light: light signalling that the automation is moving.
6) Pair of photocells: safety devices stopping automation movement in the presence of obstacles.
7) Control unit: allows to activate the movement of the automation through a mechanical or electronic key.

THE RANGE

Aprimatic's range of tubular motors for rolling shutters and sun blinds is extremely reliable, fast, and silent and offers performance to satisfy even the most demanding users.
Available with wired or wireless controls.

SMS model: without emergency operation (ideal for rolling shutters)
CMS model: with emergency operation (ideal for sun blinds). Device allowing, with the necessary accessories, to perform manual operation with the relevant rod.

Models with mechanical limit stops: easy adjustment facilitated by the presence of 2 mechanical settings on the motor head.
Models with electronic limit stops: limit stop adjustment via electric pulse.

REVOLUX TUBULAR MOTORS

Tubular motors for rolling shutters and sun blinds.

5 years warranty

IP44

ROLLER KIT REVOLUX

SERIES 35 TUBULAR MOTORS WITHOUT EMERGENCY OPERATION

SERIES 45S SHORT TUBULAR MOTORS WITHOUT EMERGENCY OPERATION

SERIES 45 TUBULAR MOTORS WITHOUT EMERGENCY OPERATION

SERIES 45 TUBULAR MOTORS WITH EMERGENCY OPERATION

SERIES 59 TUBULAR MOTORS WITHOUT EMERGENCY OPERATION

SERIES 59 TUBULAR MOTORS WITH EMERGENCY OPERATION

SERIES 92 TUBULAR MOTORS WITH EMERGENCY OPERATION

SERIES 92 TUBULAR MOTORS WITHOUT EMERGENCY OPERATION

New series 92 motors: the best solution for the automation of rolling gates or mesh gates (weighing up to max. 350 kg).

RO-MATIC RS140 / RS180 / RS230
RD360 / RD460

Operator for rolling gates, for residential use. With single or double motors, for lift from 140kg up to 380kg.

NEW WIRELESS SYSTEMS

The entire range of Aprimatic Revolux, known for its performance and reliability, is now available in a wireless version, with built-in receiver.

Available new MP version tubular motors, with built-in receiver for the management of the movement of adjustable shutters.

REVOLUX WIRELESS SERIE 35

REVOLUX WIRELESS SERIE 45

NEW

REVOLUX WIRELESS SERIE MP-RS* 45/59

RADIO CONTROLS FOR REVOLUX WIRELESS TUBULAR MOTORS

Revolux wireless series radio control to manage up to 15 tubular motors

CONTROL SYSTEMS FOR TUBULAR MOTORS (WIRED AND WIRELESS)**

NEW

*MP-RS Multiposition tubular motors with 3 limit switches, with the possibility of controlling the 3rd position by means of a wall push-button switch via wire. Ideal for the movement of roller shutters with adjustable slats.
** See ADI section

CHOOSING THE RIGHT PRODUCT ROLLING SHUTTER AUTOMATION SYSTEMS

$$\textbf{WEIGHT} = \frac{\text{Nominal motor torque (Nm)}}{\text{Lifting lever (m)}}$$

The nominal motor torque in Nm (Newton metre) is indicated on the motor label. The lifting force is obtained by adding the radius of the winding roller (R1 in the drawing) and half the thickness of the shutter (R2 in the drawing) or half the length of the rope supporting the applied weight.

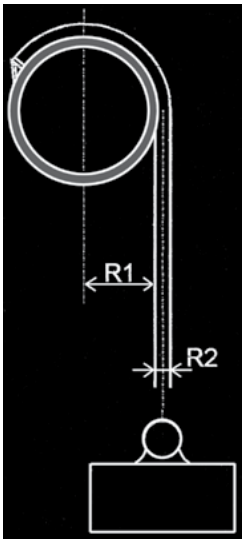

EXAMPLE IN METRES

Motor rated torque 45 Nm
Pipe diameter 60 mm - R1 = 30 mm (0.030 m)
Shutter thickness 10 mm - R2 = 5 mm (0.005 m)

$$\textbf{WEIGHT} = \frac{45\ \text{Nm}}{0{,}030\ \text{m} + 0{,}005} = \frac{45\ \text{Nm}}{0{,}035\ \text{m}} = 1285\ \text{N} \qquad 9{,}81\ \text{N} = 1\ \text{kg} \longrightarrow \textbf{WEIGHT} = \frac{1285\ \text{Nm}}{9{,}81} = 131\ \text{kg}$$

This motor can lift a free weight of 131 kg. However, application on window frames and rolling shutters requires safety coefficients of up to 50%. Therefore the maximum weight that can be lifted by the motor must be divided in half, and thus is 65 kg.

The tables to the side allow the selection of a motor in relation to the diameter of the winding roller and the weight of the rolling shutter. The weight of the rolling shutter in kg can be obtained by multiplying the area by the weight per m² of the material it is made of.

WARNING
The data detected are indicative. The installer is required to evaluate the choice of the motor which can vary according to various factors, related to friction, twisting of the roller and installation and application conditions.
In particular, for roller shutters with a width exceeding 2000mm, the use of a motor model with higher torque is recommended.

WINDING MATERIAL	Kg for m²
ALUMINIUM WITH POLYURETHANE FOAM	3,5
ALUMINIUM WITH HD POLYURETHANE FOAM	4,8
PVC	6,0
WOOD	8,5
EXTRUDED ALUMINIUM	9,0
STEEL WITH POLYURETHANE FOAM	9,5
STEEL WITH HD POLYURETHANE FOAM	10,5
STEEL	11,0

ROLLER WEIGHT (Kg)	WINDING ROLLER Ø (mm)			
	Ø 40 mm	Ø 60 mm	Ø 70 mm	Ø 97 / Ø 108 mm
5 Kg	10 Nm	20 Nm	20 Nm	
10 Kg	10 Nm	20 Nm	20 Nm	
15 Kg	10 Nm	20 Nm	20 Nm	
20 Kg	10 Nm	20 Nm	20 Nm	
25 Kg		20 Nm	20 Nm	
30 Kg		20 Nm	20 Nm	
35 Kg		20 Nm	30 Nm	
40 Kg		30 Nm	30 Nm	
45 Kg		30 Nm	30 Nm	
50 Kg		30 Nm	50 Nm	
55 Kg		30 Nm	50 Nm	
60 Kg		50 Nm	50 Nm	
80 Kg		50 Nm	50 Nm	
85 Kg		50 Nm	50 Nm	
90 Kg		50 Nm	80 Nm	
95 Kg			80 Nm	
100 Kg			80 Nm	
105 Kg			80 Nm	
110 Kg			100 Nm	
130 Kg			100 Nm	
135 Kg			100 Nm	
140 Kg			120 Nm	
150 Kg			120 Nm	
300 Kg				300 Nm
350 Kg				300 Nm

KEY

10 Nm	30 Nm	80 Nm	120 Nm
20 Nm	50 Nm	100 Nm	300 Nm

NOTE: Winding and friction coefficients included.

ROLLING SHUTTER AUTOMATION SYSTEMS

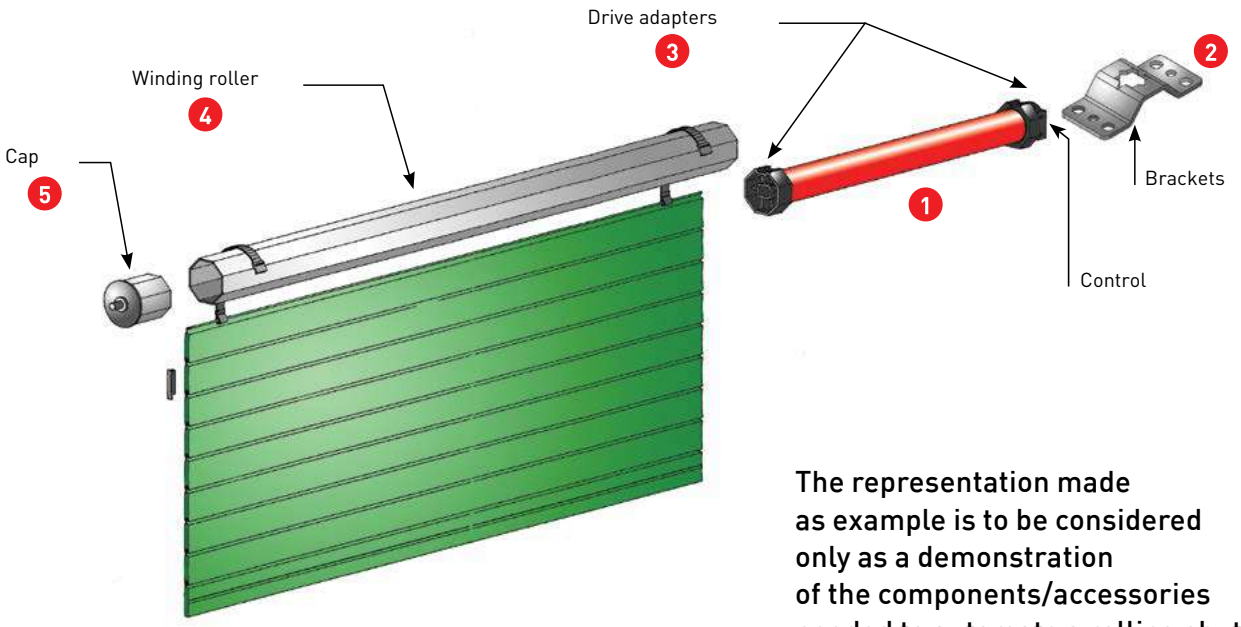

The representation made as example is to be considered only as a demonstration of the components/accessories needed to automate a rolling shutter.

MINIMUM CONFIGURATION - TUBULAR MOTOR WITHOUT EMERGENCY OPERATION			
Ref.	**Component**	**Notes**	**Page**
1	Tubular motor	Revolux 35 series Motors (models from 6Nm to 10Nm) Revolux 45 series Motors (20Nm - 30Nm - 50Nm models) Revolux 59 series Motors (80Nm - 100Nm - 120Nm models) Revolux 92 series Motors (230Nm model)	125 126-127 129 130
2	Motor fixing accessories	Revolux 35 series Revolux 45 series Revolux 59 series Revolux 92 series	125 128 130 131
3	Pipe adapters	Revolux 35 series Revolux 45 series Revolux 59 series Revolux 92 series	125 128 130 131

OPTIONAL ACCESSORIES			
Ref.	**Component**	**Notes**	**Page**
4	Octagonal pipe		131
5	Cap with round adjustable pivot		131

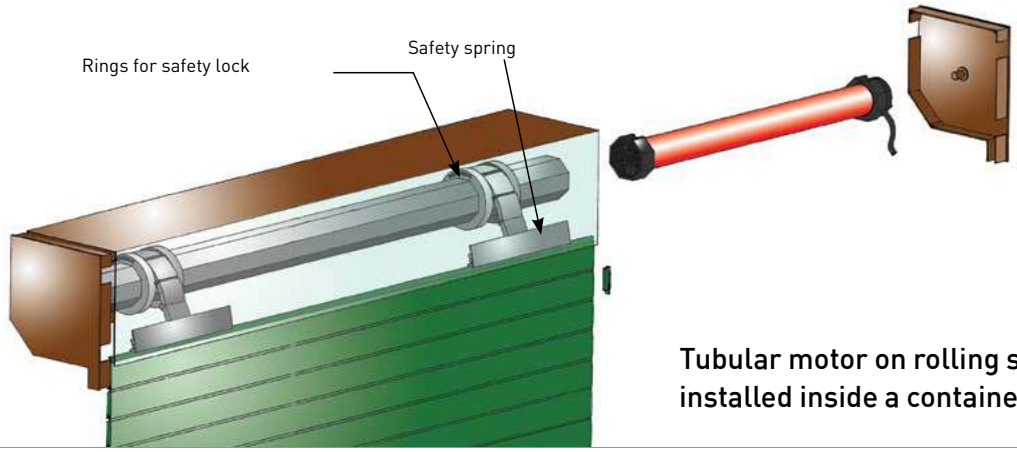

Tubular motor on rolling shutter installed inside a container

CHOOSING THE RIGHT PRODUCT AUTOMATION SYSTEMS FOR BLINDS

50 mm DIAMETER AND ROUND OGIVE ROLLER

NUMBER OF ARMS	ARM PROTRUSION (m)						
	1,5 m	2 m	2,5 m	3 m	3,5 m	4 m	5 m
2	20 Nm	30 Nm	30 Nm	30 Nm	30 Nm	30 Nm	50 Nm
4	30 Nm	30 Nm	30 Nm	50 Nm	50 Nm	50 Nm	~
6	30 Nm	30 Nm	50 Nm	50 Nm	~	~	~
8	50 Nm	50 Nm	~	~	~	~	~

NOTE: Winding and friction coefficents included.

70 mm DIAMETER AND ROUND OGIVE ROLLER

NUMBER OF ARMS	ARM PROTRUSION (m)						
	1,5 m	2 m	2,5 m	3 m	3,5 m	4 m	5 m
2	20 Nm	30 Nm	30 Nm	30 Nm	30 Nm	50 Nm	50 Nm
4	30 Nm	30 Nm	30 Nm	50 Nm	50 Nm	50 Nm	80 Nm
6	30 Nm	50 Nm	50 Nm	50 Nm	80 Nm	80 Nm	100 Nm
8	50 Nm	50 Nm	80 Nm	80 Nm	100 Nm	120 Nm	120 Nm

NOTE: Winding and friction coefficents included.

78 mm DIAMETER AND ROUND OGIVE ROLLER

NUMBER OF ARMS	ARM PROTRUSION (m)						
	1,5 m	2 m	2,5 m	3 m	3,5 m	4 m	5 m
2	20 Nm	30 Nm	30 Nm	50 Nm	50 Nm	50 Nm	80 Nm
4	30 Nm	50 Nm	50 Nm	50 Nm	50 Nm	50 Nm	80 Nm
6	50 Nm	50 Nm	50 Nm	80 Nm	80 Nm	100 Nm	120 Nm
8	80 Nm	80 Nm	80 Nm	80 Nm	100 Nm	120 Nm	~

NOTE: Winding and friction coefficents included.

KEY

10 Nm	30 Nm	80 Nm	120 Nm
20 Nm	50 Nm	100 Nm	300 Nm

AUTOMATION SYSTEMS FOR BLINDS

Tubular operator on sun blinds

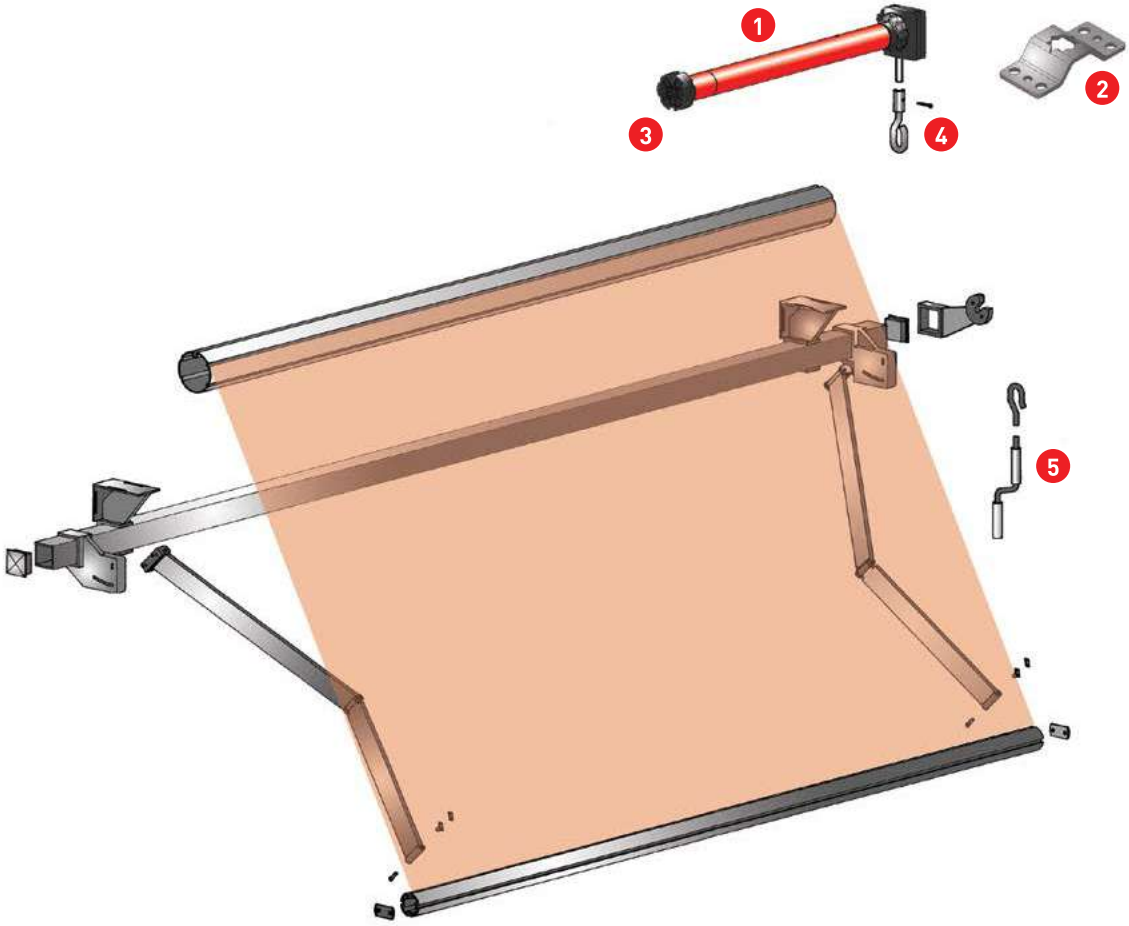

MINIMUM CONFIGURATION - TUBULAR MOTOR WITHOUT EMERGENCY OPERATION			
Ref.	**Component**	**Notes**	**Page**
1	Tubular motor	Revolux Series 35 Motors (models from 6Nm to 10Nm) Revolux Series 45 Motors (20Nm - 30Nm - 50nm models) Revolux 59 Series Motors (80Nm - 100Nm - 120Nm models)	125 126-127 129
2	Motor fixing accessories	Revolux 35 series Revolux 45 series Revolux 59 series	125 128 130
3	Pipe adapters	Revolux 35 series Revolux 45 series Revolux 59 series	125 128 130
4	Accessories for emergency operation	Revolux 45M series Revolux 59M series	128 130

OPTIONAL ACCESSORIES			
Ref.	**Component**	**Notes**	**Page**
5	Rod for manual emergency operation		131

REVOLUX TUBOLAR **MOTORS**

5 years warranty

IP44

Tubular motors for rolling shutters and sun blinds.

The motors can be combined with ADI control units, thus allowing the creation of fully-automated systems even with radio controls.

The wide availability of adapters and installation accessories allows to meet any application requirement.

3 automation kits are available for 30 kg, 60 kg and 90 kg shutters respectively, complete with accessories for installation.

The motors of the series 45, 59 and 92 are also available in CSM versions, i.e., equipped with emergency operation for manual opening in case of power supply failure.

Models with electronic limit switches, radio, 3 limit switches with the possibility of controlling the 3rd position by means of a wall push-button switch via wire **(series 45 and 59 vers.MP-RS)**. Also ideal for the movement of roller shutters with adjustable slats. Programming only with radio control.

TECHNICAL DATA

SERIES	MODEL (S without emergency operation) (M with emergency operation)	TORQUE (Nm)	POWER (W)	SPEED (rpm)	DIAMETER (Ø)
35	35S 10Nm/17	10	126	17	35
	35S 6Nm/28F	6	121	28	35
45	45S 10Nm - SHORT	10	112	15	45
	45S 20Nm	20	150	15	45
	45S 30Nm	30	165	15	45
	45S 50Nm	50	230	12	45
	45M 20Nm	20	145	15	45
	45M 30Nm	30	191	15	45
	45M 50Nm	50	191	12	45
45MP-RS	45S MP-RS 30Nm	30	188	15	45
	45S MP-RS 50Nm	50	225	11	45
59	59S 80Nm - 59M 80Nm	80	330	15	60
	59S 100Nm - 59M 100Nm	100	345	12	60
	59S 120Nm - 59M 120Nm	120	350	9	60
59MP-RS	59S MP-RS 80Nm	80	320	15	60
	59S MP-RS 100Nm	100	342	11	60
	59S MP-RS 120Nm	120	360	9	60
92	92S 300Nm - 92M 300Nm	300	940	9	92

For all 35 and 45 series models, the operating time is 4 minutes.
Engine equipped with a 1.9 m cable for electrical connection.

ROLLER KIT REVOLUX

MOTORS WITHOUT EMERGENCY OPERATION AND MECHANICAL LIMIT STOPS

ITEM NUMBER	KIT DESCRIPTION	Max. weight
43302/802	ROLLER KIT 30 kg (45S-20Nm)	Ø 60 35 kg
43302/803	ROLLER KIT 60 kg (45S-30Nm)	Ø 60 56 kg
43302/804	ROLLER KIT 90 kg (45S-50Nm)	Ø 60 90 kg
	The kits include	
	Revolux 45S tubular motor (20Nm-30Nm or 50Nm version)	
43381//061	Octagonal adapter - Ø60	
43380/057	Bracket with square shaft 10 for direct insertion in existing walls	
43380/083	Support with square shaft 10	

SERIES 35 TUBULAR MOTORS WITHOUT EMERGENCY OPERATION*

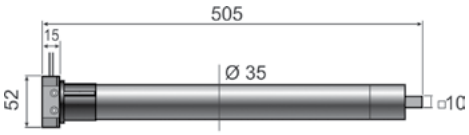

MOTOR WITHOUT EMERGENCY OPERATION AND MECHANICAL LIMIT STOP

ITEM NUMBER	DESCRIPTION	Max. weight**
43300/001	REVOLUX 35S 10Nm	Ø 40 20 kg
43300/002	REVOLUX 35S 6Nm	Ø 40 20 kg

** see Table on page120

Mod.	A mm
10	593,5

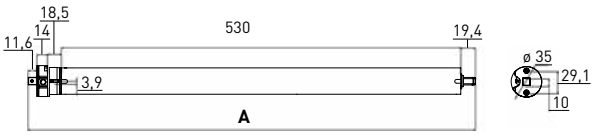

WIRELESS MOTOR WITHOUT EMERGENCY OPERATION AND ELECTRONIC LIMIT STOPS

ITEM NUMBER	DESCRIPTION
43800/001	REVOLUX WIRELESS 35SMS 10Nm 35mm diameter without manual emergency operation and with electronic limit stops. Built-in receiver.

DESCRIPTION OF SERIES 35 ACCESSORIES

ADAPTERS	ITEM NUMBER	DESCRIPTION
	43380/087	Octagonal for 40 mm roller
	43380/115	Round for 40 mm roller

ACCESSORIES	ITEM NUMBER	DESCRIPTION
	43380/077	Square shaft
	43380/082	Support kit with square shaft
	43380/091	Standard side support

NOTE: All described motors, except for the REVOLUX WIRELESS models, can be combined with ADI control units - See the "Home Automation" section of this catalogue (refer to the initial index).

(*) To complete the tubular motor installation, add an adapter to be chosen based on rolling shutter or blind winding roller, and a support to be chosen based on installation type. See the relevant pages on adapters and accessories for item selection.

TUBULAR MOTORS

SERIES 45 TUBULAR MOTORS WITHOUT EMERGENCY OPERATION*

NEW

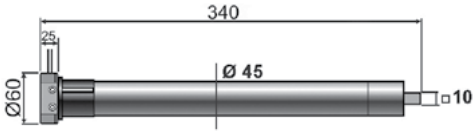

MOTOR WITHOUT EMERGENCY OPERATION AND MECHANICAL LIMIT STOP		
ITEM NUMBER	**DESCRIPTION**	**Max. weight****
43302/011	REVOLUX 45S 10Nm	Ø 60 20 kg

45S Short tubular motor is suitable for applications on small screens or shutters.

** see Table on page 120

SERIES 45 TUBULAR MOTORS WITHOUT EMERGENCY OPERATION*

Mod.	A mm
20	466
30	536
50	536

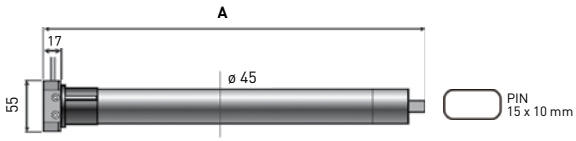

MOTOR WITHOUT EMERGENCY OPERATION AND MECHANICAL LIMIT STOP		
ITEM NUMBER	**DESCRIPTION**	**Max. weight****
43302/001	REVOLUX 45S 20Nm	Ø 60 35 kg
43302/002	REVOLUX 45S 30Nm	Ø 60 55 kg
43302/003	REVOLUX 45S 50Nm	Ø 60 88 kg

** see Table on page 120

Mod.	A mm
20	756,4
30	786,4
50	786,4

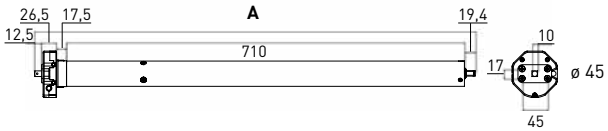

WIRELESS MOTOR WITHOUT EMERGENCY OPERATION AND ELECTRIC LIMIT STOP	
ITEM NUMBER	**DESCRIPTION**
43801/001 ((•))	REVOLUX WIRELESS 45SMS 20Nm 45mm diameter without manual emergency operation and with electronic limit stops. Built-in receiver.
43801/002 ((•))	REVOLUX WIRELESS 45SMS 30Nm 45mm diameter without manual emergency operation and with electronic limit stops. Built-in receiver.
43801/003 ((•))	REVOLUX WIRELESS 45SMS 50Nm 45mm diameter without manual emergency operation and with electronic limit stops. Built-in receiver.

((•))

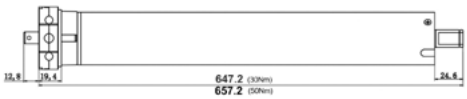

WIRELESS MULTIPOSITION MOTOR WITHOUT EMERGENCY OPERATION - 3 ELECTRIC LIMIT STOP	
ITEM NUMBER	**DESCRIPTION**
43812/002 NEW **MP-RS** ((•))	**REVOLUX WIRELESS 45SMS-MP 30Nm RS** 45mm diameter without manual emergency operation - 3 electronic limit stops to management of the movement of adjustable shutters, with integrated receiver. 60mm octagonal adapter already included. **Possibility of controlling the 3rd position by wall switch button via wire.** **N.B. programming only via radio control.**
43812/003 NEW **MP-RS** ((•))	**REVOLUX WIRELESS 45SMS-MP 50Nm RS** 45mm diameter without manual emergency operation - 3 electronic limit stops to management of the movement of adjustable shutters, with integrated receiver. 60mm octagonal adapter already included. **Possibility of controlling the 3rd position by wall switch button via wire.** **N.B. programming only via radio control.**

((•))

NOTE: All described motors, except for the REVOLUX WIRELESS models, can be combined with ADI control units - See the "Home Automation" section of this catalogue (refer to the initial index).

(*) To complete the tubular motor installation, add an adapter to be chosen based on rolling shutter or blind winding roller, and a support to be chosen based on installation type. See the relevant pages on adapters and accessories for item selection.

SERIES 45 TUBULAR MOTORS WITH EMERGENCY OPERATION*

Mod.	A mm
20	628
30	698
50	698

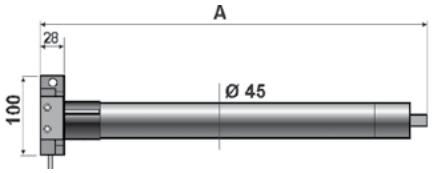

PIN 15 x 10 mm

MOTOR WITH EMERGENCY OPERATION AND MECHANICAL LIMIT STOP		
ITEM NUMBER	**DESCRIPTION**	**Max. weight****
43310/005	REVOLUX 45M 20Nm	Ø 60 35 kg
43310/006	REVOLUX 45M 30Nm	Ø 60 55 kg
43310/007	REVOLUX 45M 50Nm	Ø 60 88 kg

** see Table on page 120

Mod.	A mm
20	685
30	740
50	740

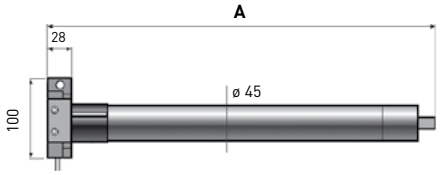

PIN 15 x 10 mm

WIRELESS MOTOR WITH EMERGENCY OPERATION AND MECHANICAL LIMIT STOPS		
ITEM NUMBER		**DESCRIPTION**
43810/001	((•))	REVOLUX WIRELESS 45CMS 20Nm 45mm diameter with manual emergency operation and mechanical limit stops. Built-in receiver.
43810/002	((•))	REVOLUX WIRELESS 45CMS 30Nm 45mm diameter with manual emergency operation and mechanical limit stops. Built-in receiver.
43810/003	((•))	REVOLUX WIRELESS 45CMS 50Nm 45mm diameter with manual emergency operation and mechanical limit stops. Built-in receiver.

RADIO CONTROLS FOR REVOLUX WIRELESS TUBULAR MOTORS

ITEM NUMBER		DESCRIPTION	
43901/001	((•))	1-channel radio control for Revolux wireless tubular motors Radio control for one tubular motor	
43901/005	((•))	5-channel radio control for Revolux wireless tubular motors Radio control for up to 5 tubular motors	
43901/015	((•))	channel radio control for Revolux wireless tubular motors Radio control for up to 15 tubular motors	

DID YOU KNOW THAT...

In the **ADI** section dedicated to home automation, you can find possible solutions and accessories to automate roller shutter and awning systems.
Discover the new range of control units, accessories and modules for home automation.

NOTE: All described motors, except for the REVOLUX WIRELESS models, can be combined with ADI control units - See the "Home Automation" section of this catalogue (refer to the initial index).

[*] To complete the tubular motor installation, add an adapter to be chosen based on rolling shutter or blind winding roller, and a support to be chosen based on installation type. See the relevant pages on adapters and accessories for item selection.

TUBULAR MOTORS

DESCRIPTION OF ADAPTERS FOR SERIES 45 (SMS-CMS) MOTORS

	ITEM NUMBER	DESCRIPTION
	43380/156	Octagonal for 60mm roller (pin 10x10mm) only for model Revolux SHORT
	43381/061	Octagonal for 60 mm roller (pin motor 15x10mm)
	43381/052	Octagonal for 70 mm roller (pin motor 15x10mm)
	43381/050	Ogive for 70 mm roller (pin motor 15x10mm)
	43381/051	Ogive for 78 mm roller (pin motor 15x10mm)
	43381/053	Bonfanti-Gaviota (pin motor 15x10mm)

DESCRIPTION OF ACCESSORIES FOR SERIES 45 SMS MOTORS

	ITEM NUMBER	DESCRIPTION
	43380/078	Revolux 45S Square shaft
	43380/083	Revolux 45S Support kit with square shaft
	43380/124	Direct fixing bracket
	43380/092	Revolux 45S standard side support
	43380/141	Revolux 45 Short standard side support
	43380/107	Revolux 45S threaded-hole support kit with square shaft
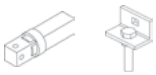	**43380/108**	Revolux 45S adjustable support kit with square shaft

DESCRIPTION OF ACCESSORIES FOR SERIES 45 CMS MOTORS

	ITEM NUMBER	DESCRIPTION
	43380/079	Revolux 45M square shaft
	43380/084	Revolux 45M Support kit with square shaft
	43380/116	Hexagonal 7 mm eyelet kit

DESCRIPTION OF COMMON ACCESSORIES FOR SERIES 45 MOTORS		
	ITEM NUMBER	**DESCRIPTION**
	43380/057	Adjustable support - 45S and 45M
	43380/068	Support with release - 45S and 45M
	43380/109	Square shaft plain support - 45S and 45M
	43380/110	Adjustable support - 45S and 45M
	43380/111	Wall support - 45S and 45M
	43380/119	One-position container bracket - 45S and 45M
	43380/101	Two-position container bracket - 45S and 45M
	43380/137	One-position container bracket - 45S and 45M

SERIES 59 TUBULAR MOTORS WITHOUT EMERGENCY OPERATION*

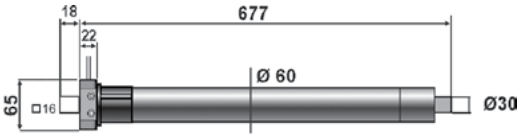

MOTOR WITHOUT EMERGENCY OPERATION AND WITH MECHANICAL LIMIT STOP		
ITEM NUMBER	**DESCRIPTION**	**Max. weight****
43320/001	59S-80	Ø 70 105 kg
43320/002	59S-100	Ø 70 139 kg
43320/003	59S-120	Ø 70 150 kg

** see Table on page 120

SERIES 59 TUBULAR MOTORS WITH EMERGENCY OPERATION*

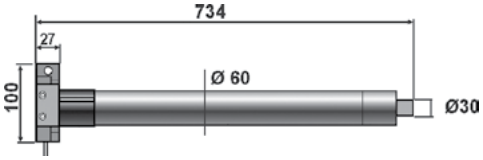

MOTOR WITH EMERGENCY OPERATION AND WITH MECHANICAL LIMIT STOP		
ITEM NUMBER	**DESCRIPTION**	**Max. weight****
43330/001	59M-80	Ø 70 105 kg
43330/002	59M-100	Ø 70 139 kg
43330/003	59M-120	Ø 70 150 kg

** see Table on page 120

SERIES 59 MP WIRELESS TUBULAR MOTORS WITHOUT EMERGENCY OPERATION * NEW

MP-RS

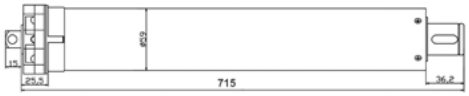

WIRELESS MULTIPOSITION MOTOR WITHOUT EMERGENCY OPERATION - 3 ELECTRIC LIMIT STOP		
CODICE	**DESCRIZIONE**	**Peso max.****
43822/001	59 SMS-MP-RS 80Nm	Ø 70 105 kg
43822/002	59 SMS-MP-RS 100Nm	Ø 70 139 kg
43822/003	59 SMS-MP-RS 120Nm	Ø 70 150 kg

** see Table on page 120

(*) 59 MP-RS series : 59mm diameter without manual emergency operation - 3 electronic limit stops to management of the movement of adjustable shutters, with integrated receiver. **Possibility of controlling the 3rd position by wall switch button via wire. N.B. programming only via radio control.**

TUBULAR MOTORS

DESCRIPTION OF ADAPTERS FOR SERIES 59 (SMS-CMS) MOTORS

	ITEM NUMBER	DESCRIPTION
	43380/088	Octagonal for 70 mm roller
	43380/104	Ogive for 78 mm roller
	43380/105	Ogive for 85 mm roller
	43380/120	Ogive for 97 mm roller

DESCRIPTION OF ACCESSORIES FOR SERIES 59 SMS MOTORS

	ITEM NUMBER	DESCRIPTION
	43380/085	Revolux 59S standard support

DESCRIPTION OF ACCESSORIES FOR SERIES 59 CMS MOTORS

	ITEM NUMBER	DESCRIPTION
	43380/081	Revolux 59M Square shaft
	43380/086	Revolux 59M Support kit with square shaft

DESCRIPTION OF COMMON ACCESSORIES FOR SERIES 59 MOTORS

	ITEM NUMBER	DESCRIPTION
	43380/099	Adjustable support - Revolux 59S and 59M
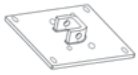	**43380/100**	Wall support - Revolux 59S and 59M

SERIES 92 TUBULAR MOTORS WITHOUT EMERGENCY OPERATION*

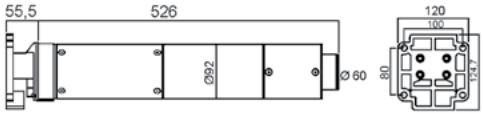

MOTOR WITHOUT EMERGENCY OPERATION AND WITH MECHANICAL LIMIT STOP

ITEM NUMBER	DESCRIPTION	Max. weight**
43340/002	92S-300	Ø 92 350 kg

** see Table on page 120

SERIES 92 TUBULAR MOTORS WITH EMERGENCY OPERATION*

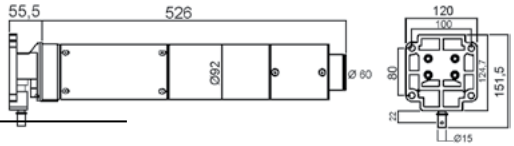

MOTOR WITH EMERGENCY OPERATION AND WITH MECHANICAL LIMIT STOP

ITEM NUMBER	DESCRIPTION	Max. weight**
43345/002	92M-300	Ø 92 350 kg

** see Table on page 120

(*) To complete the tubular motor installation, add an adapter to be chosen based on rolling shutter or blind winding roller, and a support to be chosen based on installation type. See the relevant pages on adapters and accessories for item selection.

TUBULAR MOTORS

DESCRIPTION OF COMMON ACCESSORIES FOR SERIES 92 MOTORS

	ITEM NUMBER	DESCRIPTION
	43380/118	Round for Ø 108 mm roller
	43380/125	Round for Ø 97 mm roller
	43380/134	Round for Ø 94 mm roller
	43380/140	Round for Ø 128 mm roller
	43380/131	Hook for series 92M

COMMON ACCESSORIES

DESCRIPTION OF COMMON ACCESSORIES FOR ALL TUBULAR MOTORS

	ITEM NUMBER	DESCRIPTION
	43380/094	Octagonal pipe Ø 60 mm (in 3 m bars)
	43380/095	Octagonal pipe Ø 70 mm (in 3 m bars)
	43380/066	Masonry camp
	43380/072	90° 4-hole articulation with 7 mm hexagonal rod eyelet L= 250 mm*
	43380/071	45° 2-hole articulation with 7 mm hexagonal rod eyelet L= 400 mm*
	43380/106	Linear joint **
	43380/112	Hook for steel rod L=108 mm **
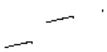	**43380/096**	Rod for emergency manual operation L=150 cm*
	43380/070	Rod with hook and articulated handle L=150 cm*
	43380/097	End piece with adjustable round pin for Ø 60 mm octagonal pipe
	43380/098	End piece with adjustable round pin for Ø 70 mm octagonal pipe
	43380/113	End piece for Ø 60 mm octagonal pipe
	43380/114	End piece for Ø 70 mm octagonal pipe
	43380/073	Safety spring spring for Ø 60 mm octagonal pipe
	43380/076	Safety spring spring for Ø 70 mm octagonal pipe

* Accessories specific for series 45M and 59M with emergency operation.
** Accessories specific for series 59M only.

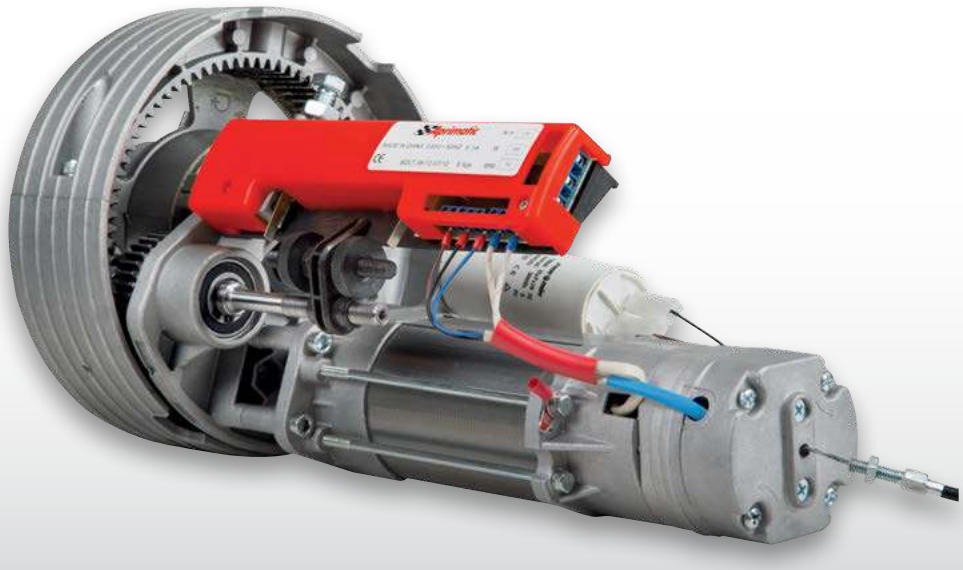

RO-MATIC RS140 / RS180

RO-MATIC RS140 / RS180

Operator for rolling gates for residential use.

ROLL500S

TECHNICAL DATA	RO-MATIC 140	RO-MATIC 180
POWER SUPPLY	230 V	230 V
ABSORBED CURRENT	2,5 A	3,1 A
ABSORBED POWER	520 W	650 W
NOMINAL TORQUE	140 Nm 130 Nm (vers. EB)	180 Nm 170 Nm (vers. EB)
MAX. LIFTING FORCE	140 kg	180 kg
REV/I°	10 n	10 n
CAPACITOR	18 µF	22 µF
OPERATING TEMPERATURE	-20° + 85°C	-20° +85° C
ROLLING GATE MAX. HEIGHT	6 m	6 m
PROTECTION DEGREE	IP30	IP30

RO-MATIC RS RS140 / RS180 (reversible) for rolling gates with 48/60 mm pole and 200/220 mm spring holder is a cost-effective solution for quick and easy installation of rolling gates up to 140 kg (RO-MATIC RS 140 model) and 180 kg (RO-MATIC RS 180 model). An electrical brake is available as accessory. **Mechanical limit stop adjustment**.

ROLL500S is an electronic control unit with built-in receiver, compatible with all Aprimatic 433.92 MHz remote controls, easy to install and put in service. It can be connected to control and safety devices and is also equipped with 4 control modes and configuration of pause/operation times. Outdoor strongboxes for recessed or wall installation available.

TYPICAL SYSTEM

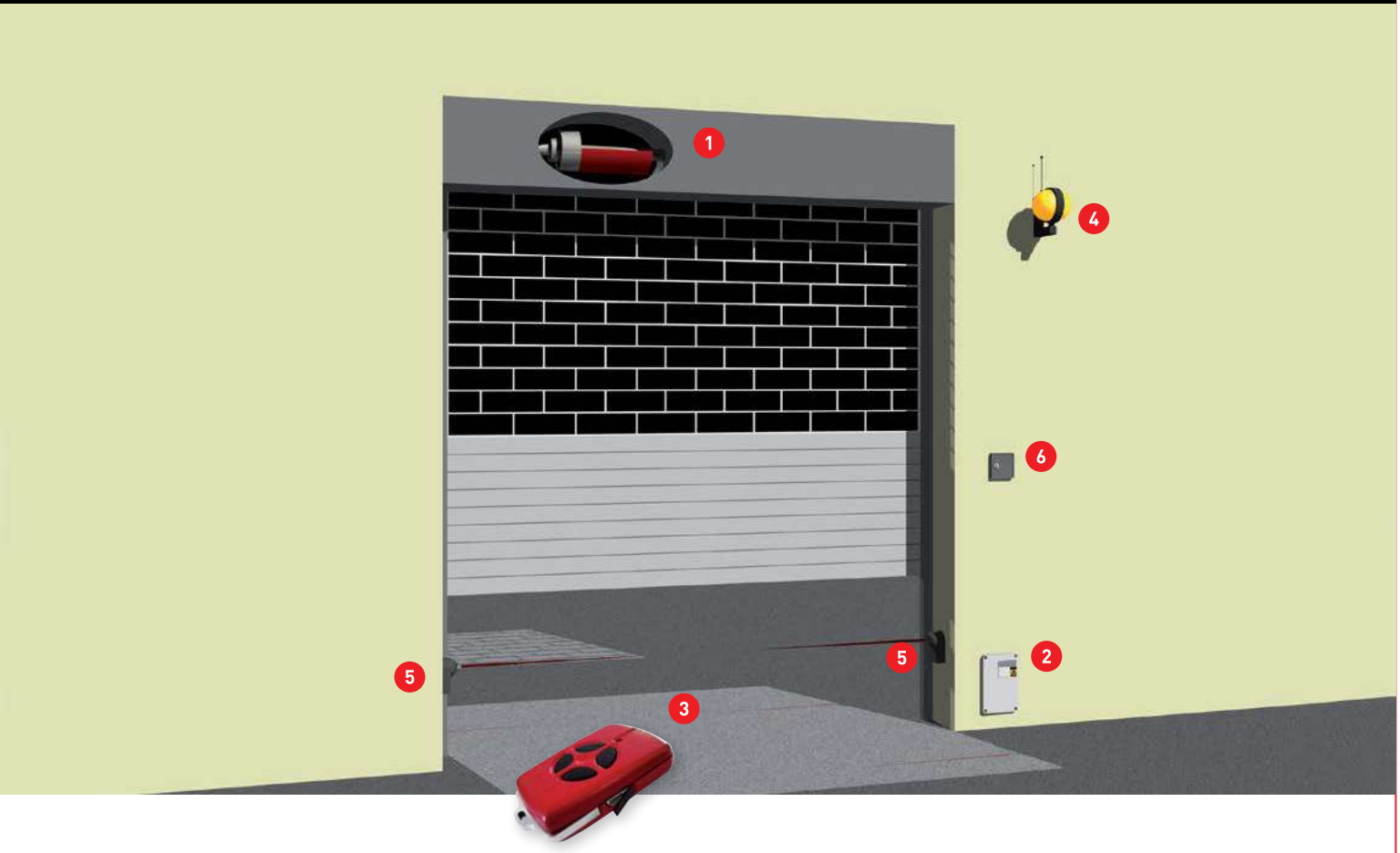

KEY

1. Operator
2. Electronic control unit
3. Transmitter
4. Flashing light
5. Pair of photocells
6. Control device: key-operated switch / presence reader / keyboard combination lock / card reader / magnetic keys

ITEM NUMBER	RO-MATIC RS 140 DESCRIPTION
43364/001	RO-MATIC RS140 140 kg gear motor without electrical brake
43364/002	RO-MATIC RS130 EB 140 kg gear motor with electrical brake

ITEM NUMBER	RO-MATIC RS 180 DESCRIPTION
43364/003	RO-MATIC RS180 180 kg gear motor without electrical brake
43364/004	RO-MATIC RS170 EB 180 kg gear motor with electrical brake

ITEM NUMBER	ACCESSORIES
43364/050	Electrical brake (with 5m steel cable)
41704/002	CS - Recessed strongbox (with up/down button and electrical brake release)
41704/004	CSP - Wall-mounted outdoor strongbox with up/down button
41704/005	Wall-mounted selector (with open/close button)
41704/007	Chromed built-in blind Slim - with up/down button and brake release (size L 37x H243 x D 33mm)
41704/008	Wall-mounted strong box Small - with up/down button and brake release (size L 60 x H120 x D 45mm)

41704/002

41704/004

41704/005

41704/007

41704/008

ITEM NUMBER	DESCRIPTION OF COMMON ACCESSORIES
43665/023	ROLL500S - Electronic control unit for rolling gates
41812/010	ER48 12-24V - Pair of photocells (optional)
41841/009	ET20N - 230 V flashing light (needed if the opening is on road side)
41905/024	TM4L - 433.92MHz four channel transmiter

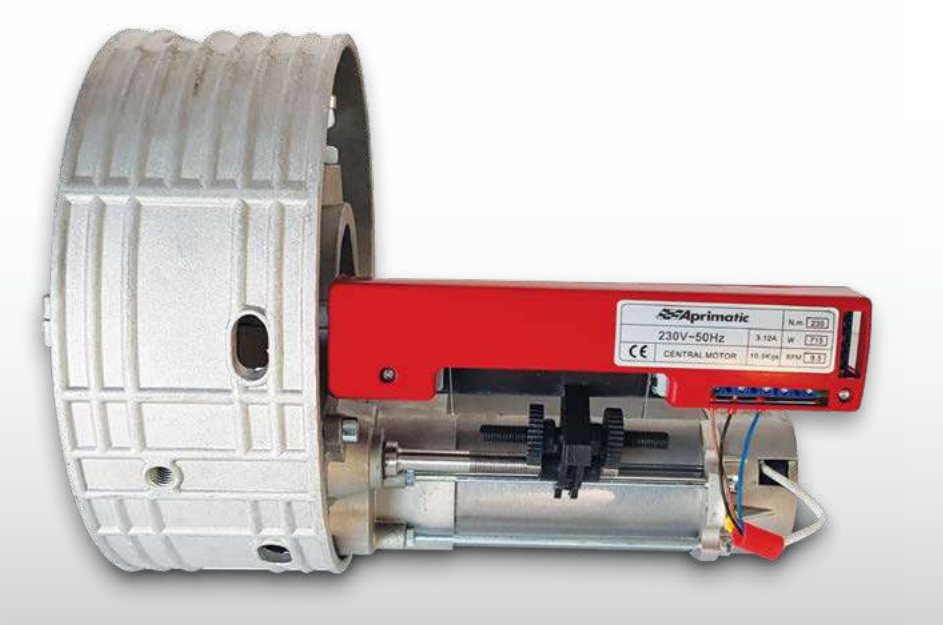

RO-MATIC RS230 NEW

RO-MATIC RS230

Attuatore per serrande avvolgibili, ad uso residenziale.

ROLL500S

TECHNICAL DATA	RO-MATIC RS230
POWER SUPPLY	230 V
ABSORBED CURRENT	3,12 A
ABSORBED POWER	715 W
NOMINAL TORQUE	230Nm
MAX. LIFTING FORCE	190 kg
REV/I°	9,5 n
CAPACITOR	22 µF
OPERATING TEMPERATURE	-20° + 85°C
ROLLING GATE MAX. HEIGHT	6 m
PROTECTION DEGREE	IP30
Nr. MOTOR	1
POLE	76 mm
SPRING HOLDER	240 mm

RO-MATIC RS230 (reversible) for rolling gates with 76 mm pole and 240 mm spring holder is a cost-effective solution for quick and easy installation of rolling gates up to 190 kg. An electrical brake is available as accessory.

Mechanical limit stop adjustment.

ROLL500S is an electronic control unit with built-in receiver, compatible with all Aprimatic 433.92 MHz remote controls, easy to install and put in service. It can be connected to control and safety devices and is also equipped with 4 control modes and configuration of pause/operation times. Outdoor strongboxes for recessed or wall installation available.

TYPICAL SYSTEM

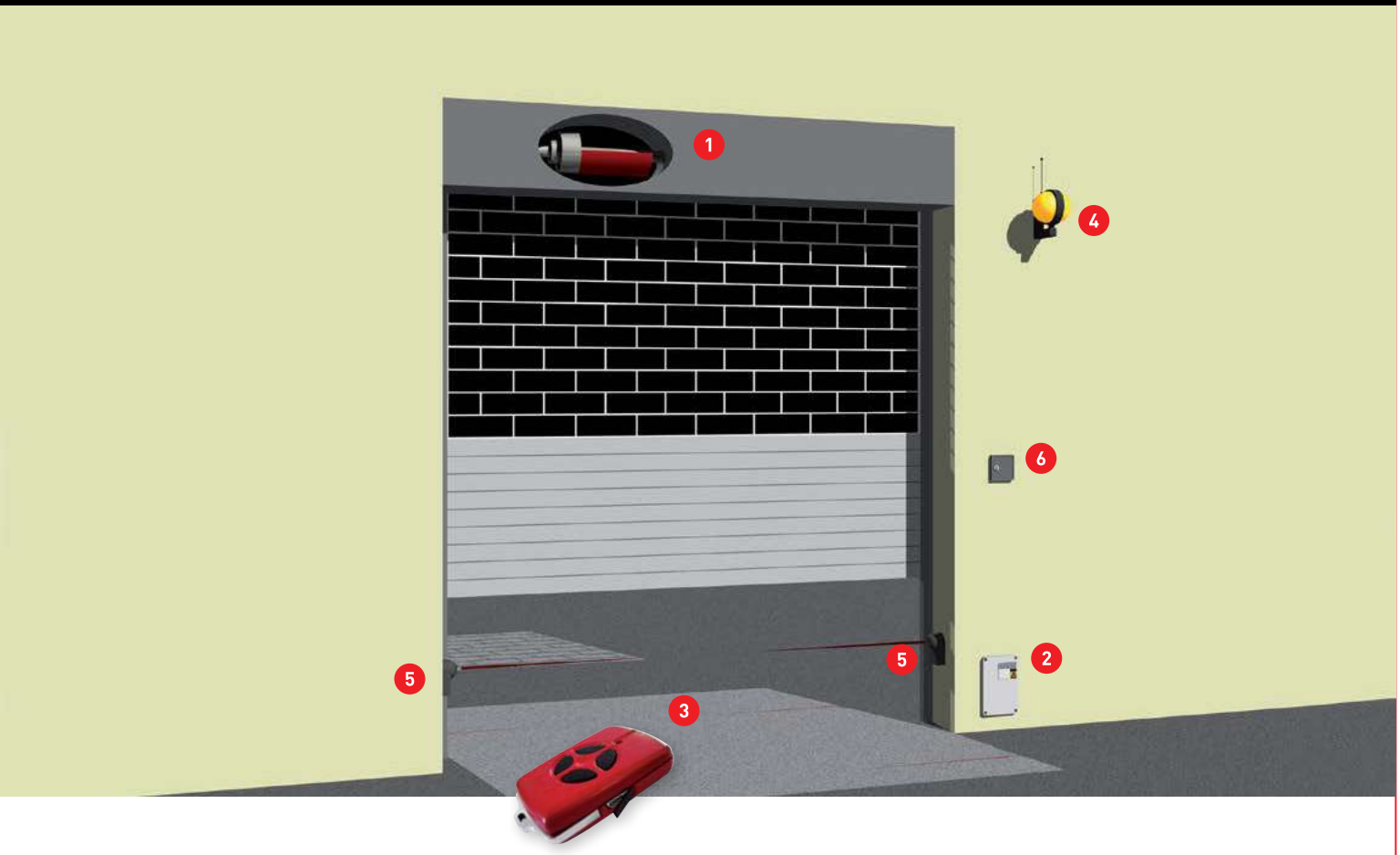

KEY

1. Operator
2. Electronic control unit
3. Transmitter
4. Flashing light
5. Pair of photocells
6. Control device: key-operated switch / presence reader / keyboard combination lock / card reader / magnetic keys

ITEM NUMBER	RO-MATIC RS230 DESCRIPTION
43364/021	RO-MATIC RS230 gear motor for rolling gates up to190kg without elctrical brake

ITEM NUMBER	ACCESSORIES
43364/050	Electrical brake (with 5m steel cable)
41704/002	CS - Recessed strongbox (with up/down button and electrical brake release)
41704/004	CSP - Wall-mounted outdoor strongbox with up/down button
41704/005	Wall-mounted selector (with open/close button)
41704/007	Chromed built-in blind Slim - with up/down button and brake release (size L 37x H243 x D 33mm)
41704/008	Wall-mounted strong box Small - with up/down button and brake release (size L 60 x H120 x D 45mm)

ITEM NUMBER	DESCRIPTION OF COMMON ACCESSORIES
43665/023	ROLL500S - Electronic control unit for rolling gates
41812/010	ER48 12-24V - Pair of photocells (optional)
41841/009	ET20N - 230 V flashing light (needed if the opening is on road side)
41905/024	TM4L - 433.92MHz four channel transmiter

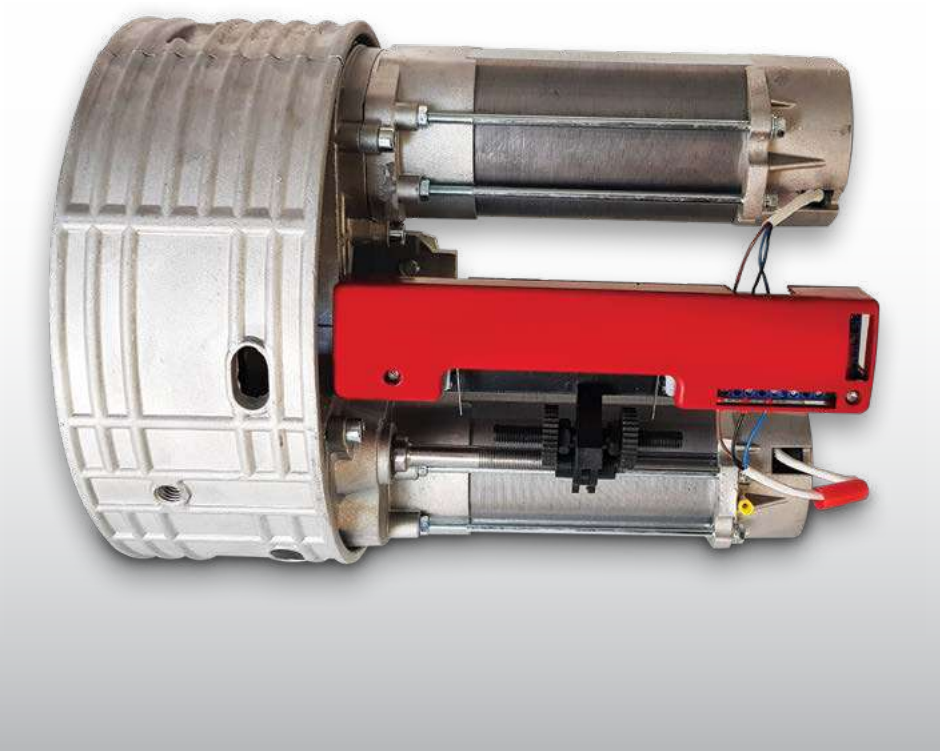

RO-MATIC RD360 / RD460 NEW

RO-MATIC RD360 / RD460

Operator for rolling gates for residential use.

ROLL500S

TECHNICAL DATA	RO-MATIC RD360	RO-MATIC RD460
POWER SUPPLY	230 V	230 V
ABSORBED CURRENT	5,21 A	6,22 A
ABSORBED POWER	1198 W	1430 W
NOMINAL TORQUE	360 Nm	460 Nm
MAX. LIFTING FORCE	360 kg	380 kg
REV/I°	10 n	9,5 n
CAPACITOR	40 µF	44 µF
OPERATING TEMPERATURE	-20° + 85°C	-20° +85° C
ROLLING GATE MAX. HEIGHT	6 m	6 m
PROTECTION DEGREE	IP30	IP30
Nr. MOTORS	2	2
POLE	60 mm	76 mm
SPRING HOLDER	200/240 mm	240 mm

RO-MATIC RD360 / RD460 (reversible) for rolling gates with 60/76 mm pole and 200/240 mm spring holder is a cost-effective solution for quick and easy installation of rolling gates up to 360 kg (RO-MATIC RD360 model) and 380 kg (RO-MATIC RD460 model). An electrical brake is available as accessory. **Mechanical limit stop adjustment**.

ROLL500S is an electronic control unit with built-in receiver, compatible with all Aprimatic 433.92 MHz remote controls, easy to install and put in service. It can be connected to control and safety devices and is also equipped with 4 control modes and configuration of pause/operation times. Outdoor strongboxes for recessed or wall installation available.

TYPICAL SYSTEM

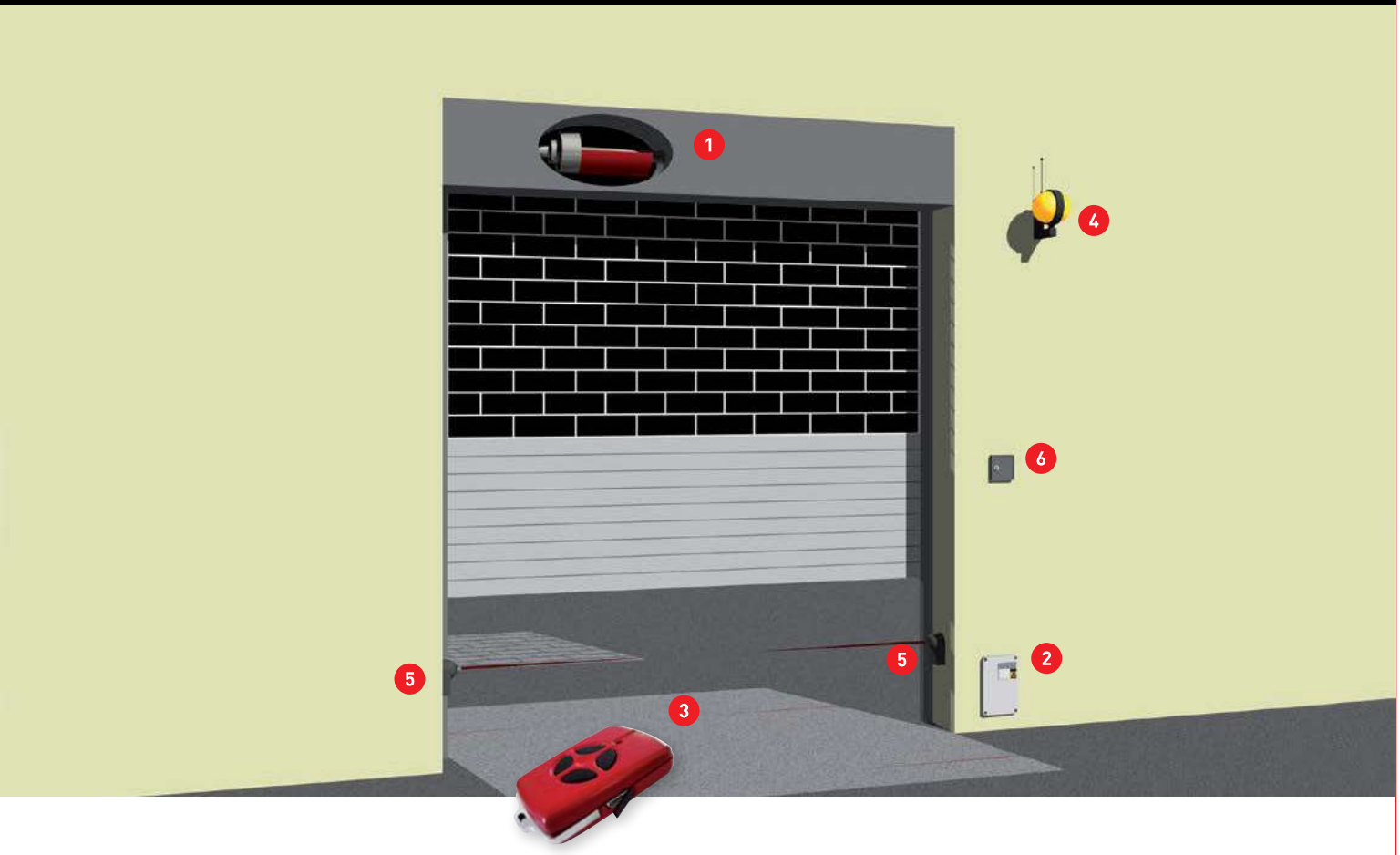

KEY

1. Operator
2. Electronic control unit
3. Transmitter
4. Flashing light
5. Pair of photocells
6. Control device: key-operated switch / presence reader / keyboard combination lock / card reader / magnetic keys

ITEM NUMBER	RO-MATIC RD 360 DESCRIPTION
43364/023	RO-MATIC RD360 gear motor for rolling gates up to360kg without elctrical brake

ITEM NUMBER	RO-MATIC RD 460 DESCRIPTION
43364/025	RO-MATIC RD460 gear motor for rolling gates up to 380kg without elctrical brake

ITEM NUMBER	ACCESSORIES
43364/050	Electrical brake (with 5m steel cable)
41704/002	CS - Recessed strongbox (with up/down button and electrical brake release)
41704/004	CSP - Wall-mounted outdoor strongbox with up/down button
41704/005	Wall-mounted selector (with open/close button)
41704/007	Chromed built-in blind Slim - with up/down button and brake release (size L 37x H243 x D 33mm)
41704/008	Wall-mounted strong box Small - with up/down button and brake release (size L 60 x H120 x D 45mm)

41704/002

41704/004

41704/005

41704/007

41704/008

ITEM NUMBER	DESCRIPTION OF COMMON ACCESSORIES
43665/023	ROLL500S - Electronic control unit for rolling gates
41812/010	ER48 12-24V - Pair of photocells (optional)
41841/009	ET20N - 230 V flashing light (needed if the opening is on road side)
41905/024	TM4L - 433.92MHz four channel transmiter

02.

SIDE-HUNG SHUTTERS

BUONGIORNO

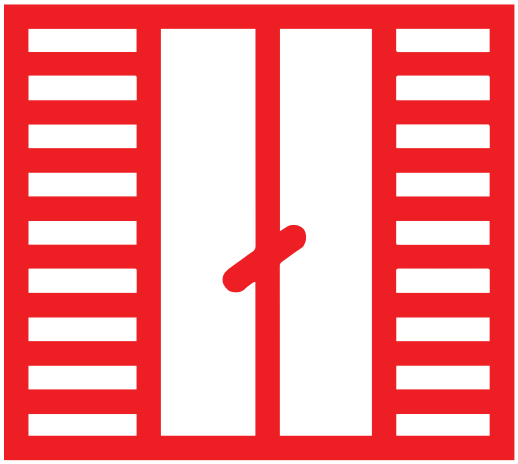

BUONGIORNO

i 225

Electromechanical operator for side-hinged shutters.

TECHNICAL DATA	
POWER SUPPLY	230 Vca
MOTOR POWER SUPPLY	24 Vcc
MOTOR POWER	4,2 W
MAX. NOMINAL TORQUE	40 Nm
ELECTRIC LOCK	Internal
CLUTCH	Mechanical
OPERATING TIME	18 sec. for 180°

INSTALLATION DATA	1 WING	2 WING
MIN. WINDOW WIDTH	43 cm	86 cm
MAX. WINDOW WIDTH	80 cm	155 cm
MAX. WING AREA	1,8 m2	1,75 m2 x 2
MAX. WING WEIGHT	80 kg	50 kg x 2

NOTE: Frictions are included in the weights.

Maximum reliability and great flexibility.

Buongiorno is an automation system for side-hinged shutters. It can be used with any type of window including those fitted with security grates and mosquito screens. It consists of an aluminium beam which acts as a support for the gear motor (two in two-wing applications) and a PVC guard. The beam and guard can be cut to size to enable application with shutters of varying sizes. **Buongiorno** is easy to install without modifying the existing shutters or carry out masonry work.

Absolute comfort.

Buongiorno enables you to open and close the shutters in your home without opening the windows simply by pressing a button.

Buongiorno is ideal for opening and closing your shutters in winter, in cold weather, in summer, even if your windows have mosquito screens or are difficult to reach.

Security and durability.

Buongiorno is fitted with an electronic clutch that behaves intelligently depending on the absorbed current. The shutter stops if it meets an obstacle during movement thus protecting the user and the gear motor. Thanks to this device, the installer does not have to make any limit stop adjustments. In the event of mains power supply failure, the user can open or close the shutter immediately without unlocking it. An electric lock can also be fitted on demand for increased security.

IDEAL SINGLE-WING INSTALLATION

ITEM NUMBER	DESCRIPTION	Q.ty
43400/802	BUONGIORNO SINGLE-WING KIT	
	The package includes:	
	BUONGIORNO single-wing automation with centralised control device	1
	Two "T" compass levers (RH and LH)	1
	Cover L = 800 mm	1

IDEAL DOUBLE-WING INSTALLATION

ITEM NUMBER	DESCRIPTION	Q.ty
43400/801	BUONGIORNO DOUBLE-WING KIT	
	The package includes:	
	BUONGIORNO double-wing automation system	1
	Two "T" compass levers (RH and LH)	1
	Cover L = 1500 mm	1

ITEM NUMBER	ACCESSORIES	Notes
43400/055	Curved lever with ambidextrous guide	Standard two-handed lever
43400/052	Compass "R" RH lever	Compact RH lever
43400/053	Compass "R" LH lever	Compact LH lever
43400/056	Compass "T" RH lever	Compact RH lever with heavy-duty bracket
43400/057	Compass "T" LH lever	Compact LH lever with heavy-duty bracket
43400/054	Bracket KIT for BUONGIORNO reverse application	Accessories for installation
43400/059	BUONGIORNO Electric lock unit	Electric security lock driven by control unit

03.
WINDOWS AND DOMES

WI-MATIC ATC300E
O2M
APRICOLOR VARIA S / VARIA ST
APRICOLOR VARIA
ST 450N
APRILINEARE DUO-TRY SYSTEM
APRICOP

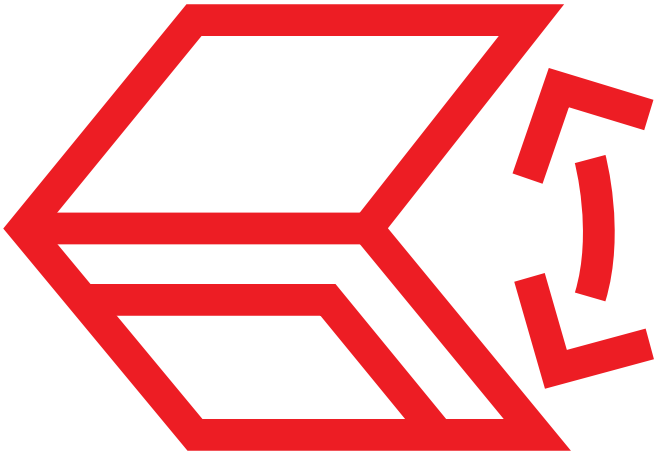

INDUSTRIAL APPLICATIONS

CHOOSING THE RIGHT PRODUCT

	WIMATIC (230V-24V)	02M (24V)	VARIA S VARIA (230V)	VARIA ST VARIA T (230V)	ST450N (230V)	APRILINEARE DUO SYSTEM	APRILINEARE TRY SYSTEM	APRILINEARE SPEEDY
Outward-opening	•	•	•		•	•	•	•
Bottom-hinged	•	•	•					
Bottom-hinged L› 1.6 m				•				
Pivot-hinged	•		•		•	•		•
Small domes 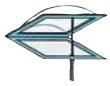		•			•			•
Small aligned domes L‹ 1 m					•	•	•	•
Large domes max 120 kg 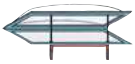						•		
Shed	•	•	•		•	•	•	•
Aligned shed and outward-opening	•	•	•		•	•	•	•
Outward-opening and large shed L›1.6 m 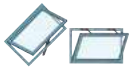				•		•	•	
Vertical sun blinds 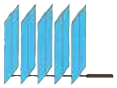					•			•
Jalousie windows 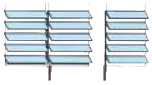					•			•

INDUSTRIAL APPLICATIONS

POSSIBLE CONFIGURATIONS

I

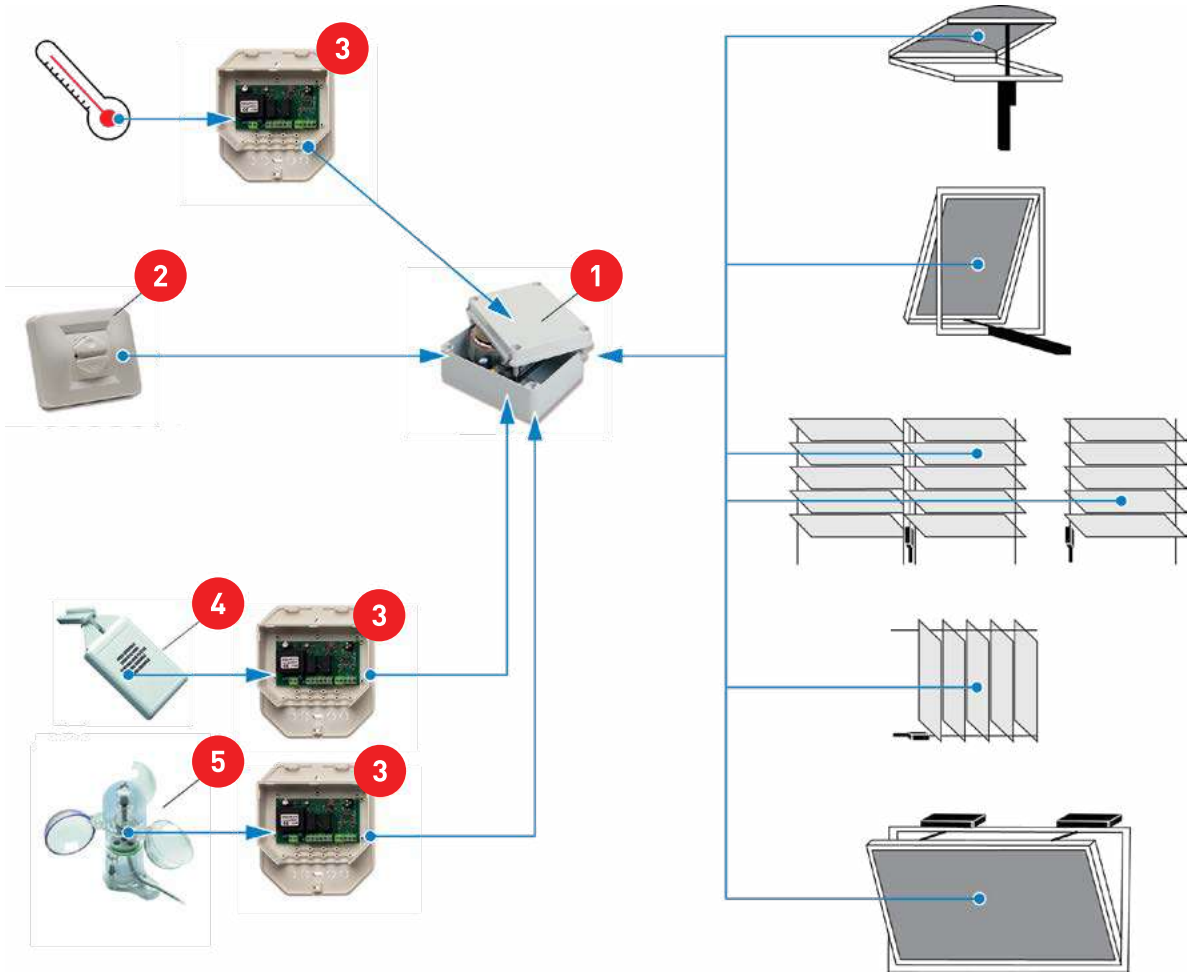

1. 24 V - 230 V control unit
2. Switch
3. Weather unit
4. Smoke/heat detector
5. Rain sensor
6. Anemometer

WI-MATIC ATC300E

NEW 230V 24V i 227

Electromechanical operator for windows with double layer chain, ideal for outward-opening windows.

TECHNICAL FEATURES	230V	24V
POWER SUPPLY	100-240 Vca 50/60 Hz	24V dc
ABSORBED CURRENT	0.25 A	1.0 A
RATED POWER	28W (PEAK 40W)	28W (PEAK 40W)
PUSH/PULL FORCE	250 N	250 N
SPEED	10 mm/s	10 mm/s
ADJUSTABLE STROKES FROM	100-400 mm	100-400 mm
TEMPERATURE	-20°+50°	-20°+60°
SIZE OPERATOR	(LxHxP) 460 x 42 x 56 mm	(LxHxP) 460 x 42 x 56 mm
SIZE WINDOWS	1600 mm MAX	1600 mm MAX
IP CLASS	IP43	IP42
PARALLEL CONNECTION	Yes, with 1 motor for each frame. **Max 15-20 motors can be connected together**	Yes, with 1 motor for each frame. **Max 15-20 motors can be connected together**
OPERATOR WEIGHT	1.6 KG	1.6 KG

Wide voltage 100-240Vca power input, suitable for all country's different requests.

Rocker brackets for long runs even on small frames.They also allow the operator suitable to a wide range of applications.

The stroke is easily adjusted through a simple rotation from the outside of the operator so you don't need to open anything.

Adjustable running, from 100 up to 400mm

Double layers stainless metal chain alloy steel that ensure maximum strength.

Very smooth running
Applications bottom hinged or roof-domes bracket available separately.

Slim dimensions and compact shape make this product easy to integrate with the window frame regardless of its thickness or design.

Aluminum casing with oxidation treatment satin to give maximum strength and aesthetics.Operator quiet thanks to the extremely robust structure that prevents vibration.

Special surface treatment to give an excellent resistance to oxidation. Excellent finishes too.

Available also the model to 24V low tension.

ITEM NUMBER	DESCRIPTION	STROKE mm	POWER SUPPLY
43509/017	WI-MATIC ATC300E with bracket for outward-opening applications and bracket for roof-domes windows application included.	400 mm	230 Vca
NEW **43509/024**	WI-MATIC ATC300E 24V with bracket for outward-opening applications and bracket for roof-domes windows application included.	400 mm	24 Vdc

ACCESSORIES

	ITEM NUMBER	DESCRIPTION		
	43509/050	Bottom hinged bracket	-	-
	43509/051	Bracket fixing motor (already included into the Wi-Matic product)	-	-

O2M

IP54 i 226 24V

Electromechanical operator for windows with double chain, ideal for outward-opening windows, bottom-hinged windows and domes.

TECHNICAL DATA	24 Vdc
POWER SUPPLY	24 Vdc
ABSORBED POWER	50 W
ABSORBED CURRENT	2 A
THRUST FORCE	350 N (stroke 150 mm) 250 N (stroke250 mm) 100 N (stroke 380 mm)
TRACTION FORCE	350 N
ADJUSTABLE STROKES	150 mm, 250 mm, 380 mm, special stroke(0÷380mm)
SHIFTING SPEED	24 mm/s
OPERATING TEMPERATURE	-5° +55° C
FRONT ADJUSTMENT	max. 10 mm
PARALLEL CONNECTION	YES (max 1 operator per window)
OVERLOAD PROTECTION	100° C
DIMENSIONS	(LxHxP) 340x40x80 mm
LIMITS OF USE	non-intensive (continuous operation MAX 4 min)
PROTECTION DEGREE	IP54
OPERATOR WEIGHT	1,2 Kg

Is a flexible, powerful and reliable product. These features make it unique in the market of window operators.

The special fixing device enables the installer to easily adjust the position of the operator on the frame.

Thanks to its thrust force and double chain, it can push and pull very heavy windows.

A dedicated software allows to reset the closing point automatically every 50 opening and closing operations. Thus,the window's heat insulation and soundproofing properties are not compromised.

The highest protection degree in its category, IP54, is a guarantee of good operation even for applications that are significantly exposed to atmospheric agents.

Smaller dimensions and a compact shape make this product easy to integrate with the window frame regardless of its thickness or design.

OPERATORS CHAIN POWER 24V (ITEM OUT OF PRODUCTION)

ITEM NUMBER	DESCRIPTION	Max. stroke mm	Power supply
43492/001	O2M RAL9005 black (with accessories)	380	24 Vcc (until stocks last)
43492/002	O2M RAL 7040 grey (with accessories)	380	24 Vcc (until stocks last)

NOTE: The O2M range includes fixing accessories for OUTWARD-OPENING and BOTTOM-HINGED windows.

ITEM NUMBER	DESCRIPTION	
43493/050	SLIM brackets for black O2M (package with 5 pairs)	
43493/051	Black skylight O2M brackets	
43493/052	Grey skylight O2M brackets	
43493/053	White skylight O2M brackets	

APRICOLOR **VARIA S / VARIA ST**

NEW i 227

Electromechanical operator fpr windows with double chain, for outward-opening windows, bottom-hinged windows.

TECHNICAL DATA	230V
POWER SUPPLY	230 Vca
ABSORBED POWER	115 W
ABSORBED CURRENT	0,5A
THRUST FORCE	300 N
TRACTION FORCE	300 N
ADJUSTABLE STROKES	in step 100 / 200 / 300 / 400mm
SHIFTING SPEED	8 mm/s
ADJUSTMENT OF THE SIDE BRACKETS	+or- 10mm
PARALLEL CONNECTION	YES
DIMENSIONS	(LxHxP) 360x42x80 mml
OVERLOAD PROTECTION	100° C (230 V)
LIGHT INDICATOR	NO
REMOVABLE TERINAL BOARD	NO
PROTECTION DEGREE	IP44

NOTE: Use of the Varia S / VARIA ST actuator still requires (compulsorily) the application of safety arms on the windows.

Apricolor VARIA S is the electromechanical actuator with double layer chain with casing plastic. Suitable for bottom hinged windows and outward-opening, with step adjustable stroke.

Stroke adjustment takes place easily from an inspection compartment arranged on the operator's body.
By moving the chain locking screw, you can adjust the output stroke with steps predefined, up to a max stroke of 400mm
The chain is rust-proof

Exclusive quick fixing system of the actuator to the window frame.

Tilting actuator support bracket and adjustable.

Apricolor VARIA ST is designed for twin-mounting on single windows with width over 1600. mm. Apricolor VARIA T stands out for its overload protection, shared between the two parallel-connected operators. If one of the two trips, the other stops its motion, thus protecting the frame from torsional stresses.

BRACKET ADJUSTMENT SYSTEM

EASY STROKE ADJUSTMENT SYSTEM

POWER SUPPLY CABLE FIXED INTEGRATED

BUBBLE LEVEL fixed directly on the bracket, facilitate the operations of predisposition for fixing the operator

ITEM NUMBER	CHAIN OPERATORS	POWER SUPPLY	NOTES
43603/001	APRICOLOR VARIA S RAL9005 Black	230 Vca	Screw Kit (conventional fitting included)
43603/002	APRICOLOR VARIA S RAL9010 White	230 Vca	Screw Kit (conventional fitting included)
43603/003	APRICOLOR VARIA S RAL9006 Grey	230 Vca	Screw Kit (conventional fitting included)

ITEM NUMBER	CHAIN OPERATOR PARALLEL CONNECTION ON THE SAME FRAME	POWER SUPPLY	NOTES
43603/011	APRICOLOR VARIA ST RAL9005 Black (for installation with another VARIA ST, →1600 mm-wide windows)	230 Vca	Screw Kit (conventional fitting included)
43603/012	APRICOLOR VARIA ST RAL9010 White (for installation with another VARIA ST, →1600 mm-wide windows)	230 Vca	Screw Kit (conventional fitting included)
43603/013	APRICOLOR VARIA ST RAL9006 Grey (for installation with another VARIA ST, →1600 mm-wide windows)	230 Vca	Sistema per fissaggio tradizionale per aperture a vasistas e a sporgere compreso

NOTE: for motor control unit selection, please refer to the "Home automation" chapter.

VARIA

VARIA T

Installation of the operator bracket to the counter-frame

Installation of the chain coupling to the mobile wing

Installation of the apricolor varia operator to the counter-frame

APRICOLOR VARIA / VARIAT

i 227

Chain operator for bottom-hinged and outward-opening windows.

TECHNICAL DATA	
POWER SUPPLY	230 Vca
ABSORBED POWER	150 W
ABSORBED CURRENT	0,8A in ca
THRUST FORCE	150 N
TRACTION FORCE	300 N
ADJUSTABLE STROKES	from 90 to 400 mm
SHIFTING SPEED	40 mm/s
FRONT ADJUSTMENT	max. 10 mm
PARALLEL CONNECTION	YES
OVERLOAD PROTECTION	100° C (only 230 V versions)
CAPACITOR	4 µF
BUILT-IN RELAY	YES
LIGHT INDICATOR	NO
REMOVABLE TERMINAL BOARD	YES
PROTECTION DEGREE	IP20
OPERATOR WEIGHT	1.7 Kg

NOTE: Use of the Varia actuator still requires (compulsorily) the application of safety arms on the windows.

Exclusive quick-fit system securing the operator to the frame.

Apricolor VARIA is an electromechanical chain operator with internal nylon magazine.

It is suitable for bottom-hinged and outward-opening applications, and features an adjustable stroke from 90 to 400 mm.
230 V operation. It can be connected in parallel. The chain is rust-proof thanks to the Dacro-met coating.

Apricolor VARIA T is designed for twin-mounting on single windows with width over 1600 mm. Apricolor VARIA T stands out for its overload protection, shared between the two parallel-connected operators. If one of the two trips, the other stops its motion, thus protecting the frame from torsional stresses.

ITEM NUMBER	CHAIN OPERATORS	POWER SUPPLY	NOTES
43503/021	APRICOLOR VARIA RAL9005 Black	230 Vca	Screw Kit (conventional fitting) included
43503/022	APRICOLOR VARIA RAL9010 White	230 Vca	Screw Kit (conventional fitting) included
43503/023	APRICOLOR VARIA RAL9006 Grey	230 Vca	Screw Kit (conventional fitting) included

ITEM NUMBER	CHAIN OPERATOR PARALLEL CONNECTION ON THE SAME FRAME	POWER SUPPLY	NOTES
43503/024	APRICOLOR VARIA T RAL9005 Black (for installation with another Varia T, >1,600 mm-wide windows)	230 Vca	Screw Kit (conventional fitting) included
43503/025	APRICOLOR VARIA T RAL9010 White (for installation with another Varia T, >1,600 mm-wide windows)	230 Vca	Screw Kit (conventional fitting) included
43503/026	APRICOLOR VARIA T RAL9006 Grey (for installation with another Varia T, >1,600 mm-wide windows)	230 Vca	Screw Kit (conventional fitting) included

ITEM NUMBER	DESCRIPTION	NOTES
43501/050	Extension Pin for chain connection - 38mm	For wood/PVC frames Minimum pack 10 pcs
43503/055 *	SCREW KIT conventional fitting system for outward- opening windows	Minimum pack 10 pcs
43503/056 *	SCREW KIT conventional fitting system for bottom-hinged windows	Minimum pack 10 pcs

* Until stocks last

NOTE: for motor control unit selection, please refer to the "Home automation" chapter.

ST 450N
Stroke 180

ST 450N
Stroke 300

ST 450N

228

Arm operator for domes, vertical sun blinds, jalousie windows, outward-opening windows.

TECHNICAL DATA	
POWER SUPPLY	230 Vca - 50 Hz
ABSORBED POWER	150 W
ABSORBED CURRENT	0,70 A
MAX. THRUST AND TRACTION FORCE	450 N
MAX. STROKES	mm 180 - 300
AUTOMATIC LIMIT STOP	YES
PARALLEL CONNECTION	YES
OVERLOAD PROTECTION	YES, with 1 motor for each frame
CAPACITOR	1 per 5 µF
BUILT-IN RELAY	YES
PROTECTION DEGREE	IP55 (indoor use)
OPERATOR WEIGHT	2.0 Kg

Innovative magnetic limit stop detection system without moving mechanical parts: it further increases product reliability in any working condition.

Product dimensions are designed to be as compact as possible to ensure an installation that blends with the rest of the building.

Silent operation and speed are the two strengths of the ST 450N operator.

Can be connected in parallel thanks to the relay built into the card.

Electronic operator in aluminium casing with straight-arm linear movement.

230 Vac power supply with overload protection. Max. stroke 300 mm. Available accessory: Kit for limit stop adjustment. Features a reed switch system without moving mechanical parts.Brackets and supports are supplied for the required application.

ITEM NUMBER	DESCRIPTION	STROKE mm	POWER SUPPLY
43545/011	ST 450 N With fixing accessories for OUTWARD-OPENING applications 180	180	230 Vca
43545/012	ST 450 N With fixing accessories for OUTWARD-OPENING applications 300	300	230 Vca
43545/013	ST 450 N With fixing accessories for jalousie windows and vertical sun blinds	180	230 Vca
43545/050	ST 450 N stroke adjustment KIT		

NOTE: For motor control unit selection, please refer to the "Home automation" chapter.
NOTE: All prices are subject to variation.

ST450N model for jalousie windows and vertical sun blinds.

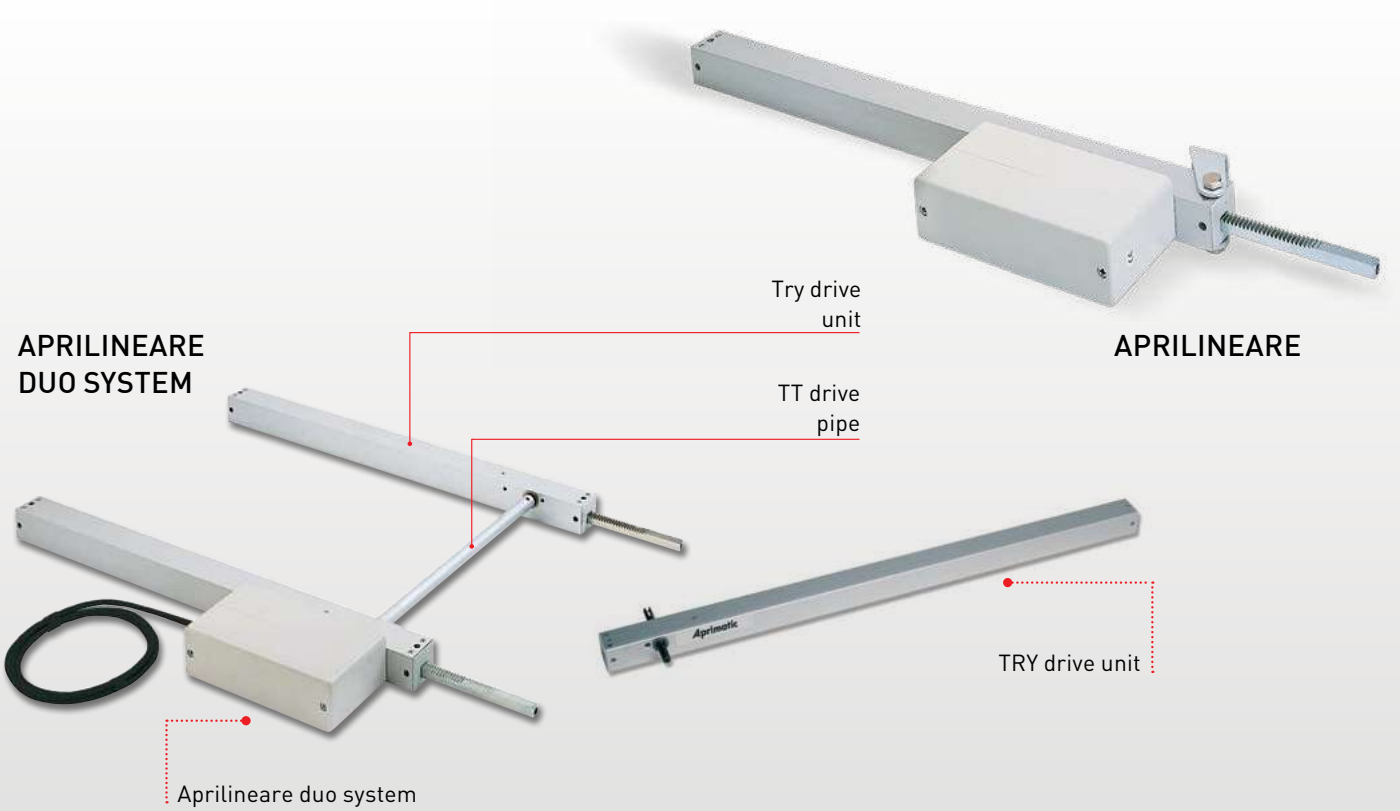

APRILINEARE - DUO SYSTEM

i 229

Rack operators (with two or three thrust points) for bottom-hinged and outward-opening applications, shed, skylights, domes, vertical sun blinds and sliding windows.

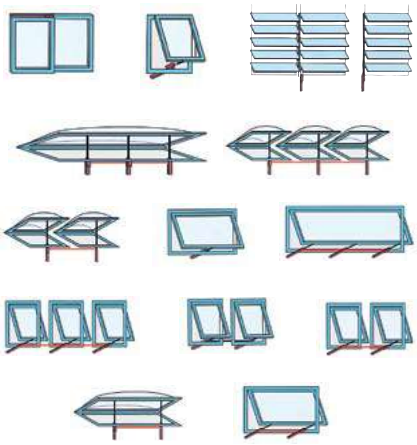

TECHNICAL DATA	APRILINEARE	DUO SYSTEM
POWER SUPPLY	230 Vca - 50 Hz	230 Vca - 50 Hz 24 Vcc - 50 Hz
ABSORBED POWER	20 W	20 W
ABSORBED POWER	0,1A	0,1A (230 V) 0,8A (24 V)
THRUST AND TRACTION FORCE	650 N	600 N (duo-try system)
SHIFTING SPEED	30 mm/s	8 mm/s
STANDARD AVAILABLE STROKES	170, 230 mm	350, 550, 750 mm
LIMIT SWITCH	Electronic	Electronic
STANDARD LENGTH DRIVE PIPES		844, 1244, 1544, 1844, 1944 mm
STANDARD LENGTH DRIVE PIPES		900, 1300, 1600, 1900, 2000 mm
COLOURS	Silver	Silver
PARALLEL CONNECTION	YES	YES, with 1 moto for each frame
OPERATING TEMPERATURE	-10° + 60°C	-10° + 60°C
PROTECTION DEGREE	IP65 (only for the vertical sun blinds version)	IP55

Aprilineare serie are windows operators for vertical sunblinds, domes or applications that required on the frame one thrust point.

Duo System and Try System are ideal for use with automation systems for large domes, outward-opening windows and large skylights. They are valid alternatives in applications requiring two or three thrust points.

Duo and Try system have perfect balance and therefore evenly- distributed movement are obtained, even with large frames, by exploiting **the power and reliability** of a motor unit combined with one or two more thrust units.
Electric anodised aluminium operators with rack-driven linear movement, fitted with an electronic limit stop, IP55 protection degree, anodised aluminium bracket and galvanised steel frame mount. The operators can be connected in parallel.

The rack is made of C43 galvanised steel, and has a 10 x 10 square section. The box is made of two pieces of sealed impact-proof ABS. The operators are fitted with an internal cable.

The motor Duo System Can be used in conjunction with the TRY drive units made of anodised aluminium and consisting of: a C43 galvanised steel rack with 10 x 10 square section complete with anodised aluminium bracket and galvanised steel frame mount. The drive pipes for connection to two or three thrust points are made of anodised aluminium and are supplied complete with fixing screws.

ITEM NUMBER	DESCRIPTION OF APRILINEARE FOR VERTICAL SUN BLINDS	STROKE mm	POWER SUPPLY
43571/001	APRI 17 230 Stainless steel Aprilineare (version with 650N thrust force)	170	230 Vca
43571/002	APRI 23 230 Stainless steel Aprilineare (version with 650N thrust force)	230	230 Vca

ITEM NUMBER	230V RACK OPERATORS	STROKE mm	POWER SUPPLY
43572/001	APRI DUO 35	350	230 Vca
43572/002	APRI DUO 55	550	230 Vca
43572/003	APRI DUO 75	750	230 Vca
43572/004	APRI DUO 100	1000	230 Vca

ITEM NUMBER	24V RACK OPERATORS	STROKE mm	POWER SUPPLY
43573/001	APRI DUO 35	350	24 Vcc
43573/002	APRI DUO 55	550	24 Vcc
43573/003	APRI DUO 75	750	24 Vcc

ITEM NUMBER	DRIVE UNITS	STROKE mm	NOTES
43574/050	TRY 35 drive unit	350	For use with ApriDuo + 2TT or 1TT
43574/051	TRY 55 drive unit	550	For use with ApriDuo + 2TT or 1TT
43574/052	TRY 75 drive unit	750	For use with ApriDuo + 2TT or 1TT
43574/053	TRY 100 drive unit	1000	For use with ApriDuo + 2TT or 1TT

ITEM NUMBER	DRIVE PIPES	NOTES
43531/050	TT 90 (centre distance 900 mm)	Pipe length = rack centre distance -56 mm
43531/051	TT 130 (centre distance 1300 mm)	Pipe length = rack centre distance -56 mm
43531/052	TT 160 (centre distance 1600 mm)	Pipe length = rack centre distance -56 mm
43531/053	TT 190 (centre distance 1900 mm)	Pipe length = rack centre distance -56 mm
43531/054	TT 200 (centre distance 2000 mm)	Pipe length = rack centre distance -56 mm

ITEM NUMBER	DESCRIPTION	
43580/064	Support bracket in silver anodised aluminium for special outward-opening applications	
43580/065	350 mm rear bracket for domes, in silver anodised aluminium for fixing to the rear mount of the operator	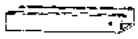
43571/050	Pack brackets for APRIDUO (to convert the model for vertical sun blind in standard model)	
43580/068	Adjustable "CK" support in galvanised sheet metal	

NOTE: for motor control unit selection, please refer to the "Home automation" chapter.

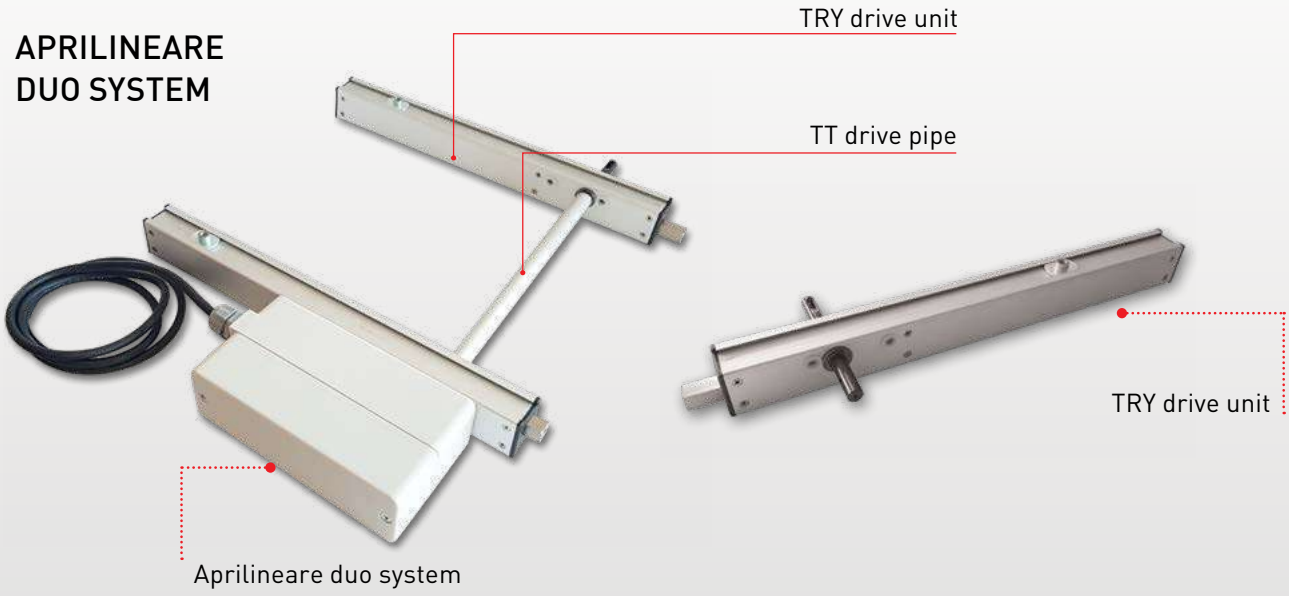

APRILINEARE - DUO SYSTEM REG.

NEW 230V

Rack operators (with two or three thrust points) for bottom-hinged and outward-opening applications, shed, skylights, domes, vertical sun blinds and sliding windows with lateral adjustment.

New actuator Duo System version with predisposition on the aluminum of a lateral guide to allow adjustment of the actuator compared to the window, offering greater versatility in the installation phase.
The rack is made in C43 galvanised steel, and has a 12x12 square section.
or technical characteristics and optional installation accessories refer to refer to the product pages Aprilineare Duo System.

ITEM NUMBER	RACK OPERATORS	STROKE mm	POWER SUPPLY
43577/001	TRY 35 Adjustable transmission unit	350	230 Vca
43577/002	TRY 55 Adjustable transmission unit	550	230 Vca
43577/003	TRY 75 Adjustable transmission unit	750	230 Vca

ITEM NUMBER	DRIVE UNITS	STROKE mm	NOTE
43579/050	TRY 35 Drive unit lateral adjustment	350	For use with ApriDuo + 2TT or 1TT
43579/051	TRY 55 Drive unit lateral adjustment	550	For use with ApriDuo + 2TT or 1TT
43579/052	TRY 75 Drive unit	750	For use with ApriDuo + 2TT or 1TT

ITEM NUMBER	DRIVE PIPES	NOTE
43531/050	TT90 (centre distance 900 mm)	Pipe length = rack centre distance -56 mm
43531/051	TT130 (centre distance 1300 mm)	Pipe length = rack centre distance -56 mm
43531/052	TT160 (centre distance 1600 mm)	Pipe length = rack centre distance -56 mm
43531/053	TT190 (centre distance 1900 mm)	Pipe length = rack centre distance -56 mm
43531/054	TT200 (centre distance 2000 mm)	Pipe length = rack centre distance -56 mm
43577/050	Adjustable bracket for DUO-inverted application	

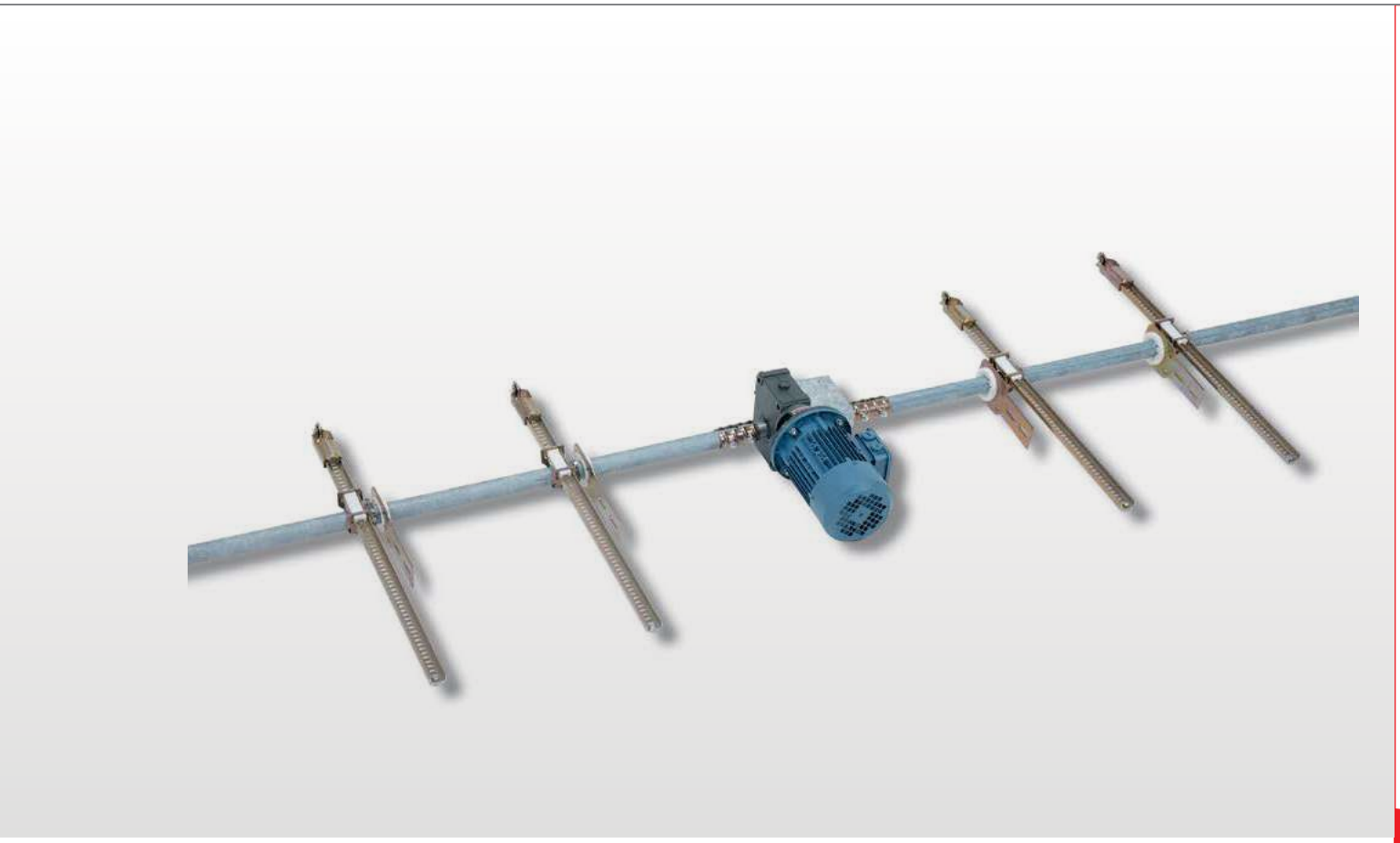

APRICOP

i 230

Systems for remote automation of windows.

ELEMENTS OF THE SYSTEM:
1- Gear motor unit
2- Limit stop device
3- Rotary shaft
4- Shaft support bracket
5- Rack rail
6- Frame mount
with spring compensator

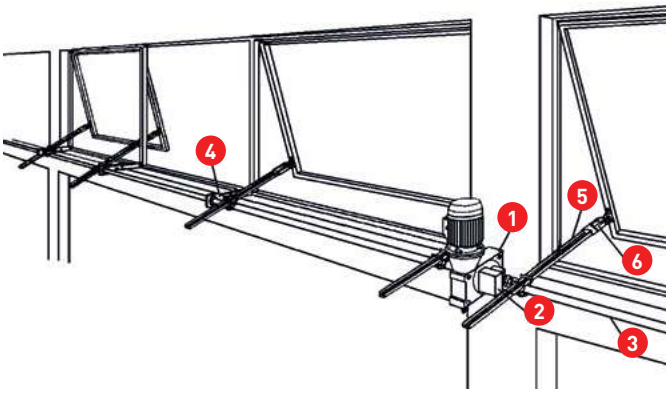

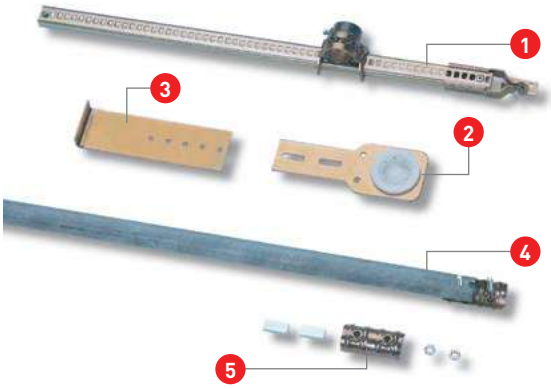

1 - Rack rail for bottom-hinged or outward-opening applications:
- Spring compensator (pull or push)
- Sprocket for rotary shaft (Ø 33 mm)
2 - Standard bracket running on ball bearings for rotary shaft support (Ø 33 mm)
3 - Counter-bracket (length 140-210 mm)
4 - Galvanised rotary shaft (Ø 33 mm)
5 - Joint with coupling pin for rotary shaft (Ø 33 mm).

The APRICOP systems have been designed to solve the problems represented by remotely opening and closing bottom-hinged or outward-opening windows, whether installed individually or in rows, also in long rows of windows, skylights, in breeding farms or greenhouses.

The windows are opened and closed by a series of rack rails running on a toothed sprocket, driven by a shaft, which in turn is turned by a gear unit.

The transmission of the rotational movement from the gear unit to the shaft, and from each element to the next on the shaft is guaranteed by joints with bolts and coupling pin.

The spring compensator on the end of the rack may be of the pulling or pushing type depending on which way the windows close, and guarantees even pressure on the window frames.

The rotary shaft **support brackets** run on ball bearings and have adjustment slots. They can also be fitted with counter-brackets. Available for shafts with diameters of 33 mm.

The rack rails feature brass toothed sprockets, which must be fixed to the rotary shaft using the relevant press-fit bolts.

The bracket, to screw onto the window, is held on the rack with a practical spring-loaded pin.

APRICOP MOTOR

Electrical gear unit with single-phase motor coupled to a self-locking worm screw gear unit.
With limit stop.

MOTOR UNIT TECHNICAL SPECIFICATIONS

SERIES	MOTOR					ADJUSTABLE REV NO ON LIMIT STOP		MAX. THRUST RACKS	FRONT LENGTH	PROTECTION DEGREE
RF= WITH ROTARY LIMIT STOP	Kw (CV)	POLES (Size)	VOLTAGE	SHAFT Ø mm	TORQUE N (GIRI 1')	Min	Max	N	m	IP
APRICOP	0,52	4 (0,70)	Single-phase	33	5	1 (15)	12	1200	25	30

APRICOP

i 231

RACK RAILS

A curved rack can be supplied, in order to reduce the inward projection in the presence of obstacles or in case of window frames with limited height from the ground.

TECHNICAL SPECIFICATIONS OF RACKS AND BRACKETS

COMPENSATOR			RACK ROD			BRACKET
Pull on closing	Push on closing	Sprocket Ø mm	Section mm	Length mm	Load kg	Load kg*
Mod. 379	Mod. 389	33	30 x 14	800 / 1200	50	50

* Maximum overall load at 18° C.

N.B.: The number of racks to fit on each window must be calculated by taking into consideration the necessary thrust and the dimensions and stiffness of the frame itself.
N.B.:Racks with different lengths are available on demand.

THRUST NEEDED FOR WINDOW OPERATION

OUTWARD-OPENING	PIVOT-HINGED	BOTTOM-HINGED
From 1/3 to 1/2 window weight	About 1/4 window weight	From 1/3 to 1/2 window weight

ITEM NUMBER	DESCRIPTION
43550/001	APRICOP single-phase motor (*) Ø 33 mm with limit stop
43550/051	(*) To be used with adapter for round Apricop pipe

RF: with rotary limit stop
NOTE: For applications with over 20m of windows, the unit must be installed in the centre or off-centre, to limit the elastic deformation of the shaft.

ITEM NUMBER	APPLICATION ON OUTWARD-OPENING OR PIVOT-HINGED WINDOWS (pull compensator racks)
43563/006	Straight version Mod. 379 - Rack Ø 33 mm - L = 1,000 mm
43563/007	Straight version Mod. 379 - Rack Ø 33 mm - L = 1,200 mm
43563/008	Straight version Mod. 379 - Rack Ø 33 mm - L = 1,400 mm
43563/026	Curved version Mod. 379 - Rack Ø 33 mm - L = 1,000 mm
43562/052	Complementary coupling, pin and rack spring package

ITEM NUMBER	APPLICATION ON BOTTOM-HINGED WINDOWS (push compensator racks)
43564/006	Straight version Mod. 389 - Rack Ø 33 mm - L = 1,000 mm
43564/007	Straight version Mod. 389 - Rack Ø 33 mm - L = 1,200 mm
43564/008	Versione dritta Mod. 389 Cremagliera Ø 33 mm - L = 1400 mm
43564/026	Curved version Mod. 389 - Rack Ø 33 mm - L = 1,000 mm
43562/052	Complementary coupling, pin and rack spring package

NOTE: A complementary coupling, pin and rack spring package must be ordered for each rack, Item No. 43562/052. (min.quantity 20pcs)

NOTE: Always indicate the radius required for curved racks (minimum radius 750 mm).
Oversized racks are available on request (max. length 2,200 mm). When ordering, indicate the item number corresponding to the first larger standard-length rack and indicate the exact measurement in millimetres.
Delivery - 5 weeks from date of order. Contact customer service for AN estimate and availability.

ITEM NUMBER	DESCRIPTION OF ACCESSORIES FOR RACK SYSTEM
43562/054	Standard bracket for Ø 33 mm
43562/058	Counter-bracket L = 140 mm
43562/059	Counter-bracket L = 210 mm

ITEM NUMBER	DESCRIPTION OF PIPE ACCESSORIES
43562/062	Steel joint for Ø 33 mm shaft
43562/060	Key for Ø 33 mm shaft

04.

HOME AUTOMATION

WIRELESS	CONTROL UNIT 433.92MHz ACCESSORIES AND SENSORS
BY WIRE	ADI MODULES MOTOR CONTROL UNIT ACCESSORIES AND SENSORS

ADI

ADI

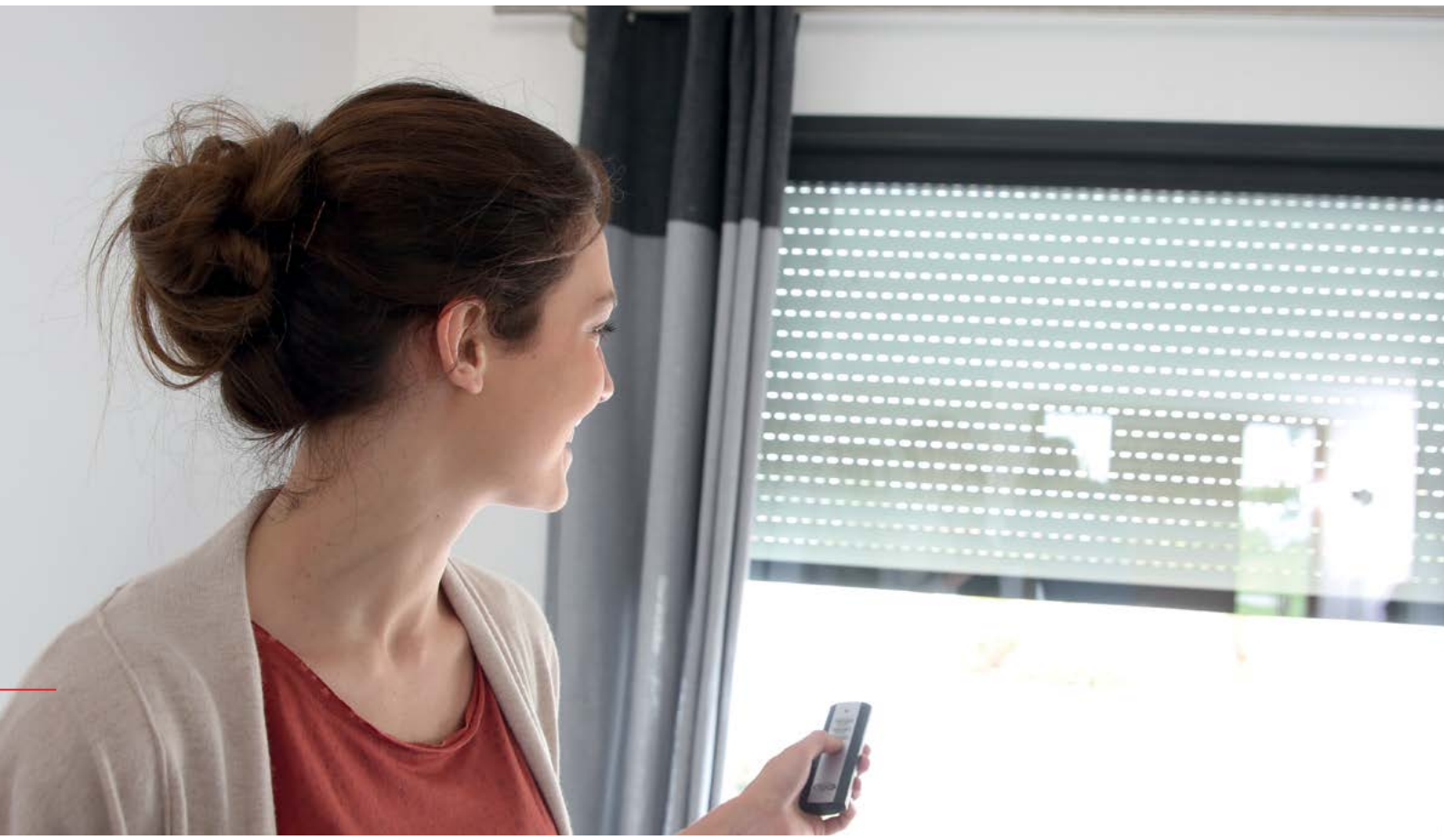

HOME AUTOMATION

Cost-effective solutions for the most common automation needs in the residential and service sectors.
Now, it is possible to automate existing row motors, by means of wireless control unit.
Discover all the installation opportunities from the classic wire version, to the most advanced wireless (Home automation 433.92Mhz).

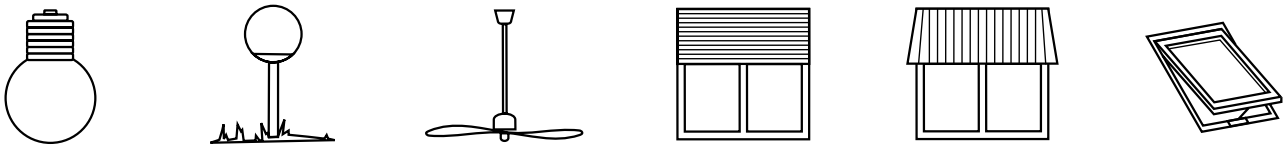

WIRELESS HOME AUTOMATION 433,92MHZ

AUTOMATE SUN AWNINGS AND SHUTTERS SYSTEMS WITH MECHANICAL MOTORS ALREADY INSTALLED?

Now it's possible, thanks to the new internal or external receivers combinable to with new wall keyboards.

Furthermore, for systems with radio motors, they are available new wireless accessories to manage opening and closing of awning and roller shutters, according to weather conditions.

Discover all the possible solutions with the new range of 433,92MHz Wireless Home Automation.

WIRED HOME AUTOMATION AND ADI MODULES

The whole range of control units and accessories for motor control on roller shutters / awning or window actuators with wired control.

433.92MHZ WIRELESS HOME AUTOMATION **SYSTEMS**

An economical and practical solution for the most common needs of automating wired systems via radio, implementing or arranging control accessories on wireless motorized systems.

DESCRIPTION OF RECEIVERS FOR MOTORS WITH MECHANICAL ADJUSTMENT

	ITEM NUMBER	DESCRIPTION
	43380/300	R-EX - 433.92Mhz Radio Receiver (external mounting) for remote control of "mechanical limit stop" tubular motors, also on existing systems. Max 800W output. Memorize max 20 remote controls. Dimensions: 35x120x22mm
	43380/301	R-IN - 433.92Mhz Radio Receiver (internal mounting) for remote control of "mechanical limit stop" tubular motors, also on existing systems. Max 300W output. Memorize max 20 remote controls. Dimensions: 50x50x27mm
	43380/302	WR-OUT - Module (12V-24V) changes a WIRE contact normally open (NO) in a command via RADIO - to be combined with motors with receiver on board. It makes it possible to manage the motor from normal push-button panels transforming them by radio. Dimensions: 44x64x23mm
	43380/303	WR-IN - Module (5V) changes a RADIO command into a contact via Normally open (NO) WIRE - to be combined with motors with receiver built-in. It makes it possible to transform a command via RADIO into an output command with clean contacts. Dimensions: 44x64x23mm

DESCRIPTION OF PARALLEL / CENTRALIZED WIRED CONNECTION MODULES

	ITEM NUMBER	DESCRIPTION
	43380/305	LC - Module for each single "mechanical limit stop" motor for connection "LOCAL command" and "CENTRALIZED command". One module for each motor (min 2 modules up to max. 200 modules). Necessary for motors to be connected in parallel without relay on board. Dimensions: 50x50x22mm.
	43380/304	CH4 - Equipment for parallel connection of 4 "mechanical limit stop" motors with a single command. Control with a single switch. Necessary for motors to be connected in parallel without relay on board. 4x250W output. Dimensions: 152x107x55mm.
	43380/308	CH8 - Equipment for parallel connection of 8 "mechanical limit stop" motors with a single command. Control with a single switch. Necessary for motors to be connected in parallel without relay on board. 8x250W output. Dimensions: 260x107x55mm.

DESCRIPTION OF WALL CONTROLS - REMOTE CONTROLS

	ITEM NUMBER	DESCRIPTION
	43901/010	KEY15W - 15 channel radio wall keyboard
	43901/011	KEY1W - 1 channel radio wall keyboard
	43901/001	1-channel radio control for Revolux wireless tubular motors. Radio control for one tubular motor.
	43901/005	5-channels radio control for Revolux wireless tubular motors. Radio control for up to 5 tubular motors.
	43901/015	15-channels radio control for Revolux wireless tubular motors. Radio control for up to 15 tubular motors.

DESCRIPTION WIRELESS WEATHER UNITS

	ITEM NUMBER	DESCRIPTION
	43380/307	RV-W - WEATHER Radio Station, allows the closing command in case of SUN and WIND. For Wireless motors with on-board receiver. It makes possible the management of automatic closing and opening in case of wind and / or sun.
	43380/306	VIB - VIBRATION sensor via RADIO. For Wireless motors with receiver on board. It makes it possible to close the curtains in case of vibrations caused from the wind.

43380/300 EXTERNAL RECEIVER DIAGRAM

R-EX - 433.92Mhz Radio Receiver (external mounting)
for remote control of "mechanical limit stop" tubolar motors (NO Wireless) installed on awning or roller shutter.

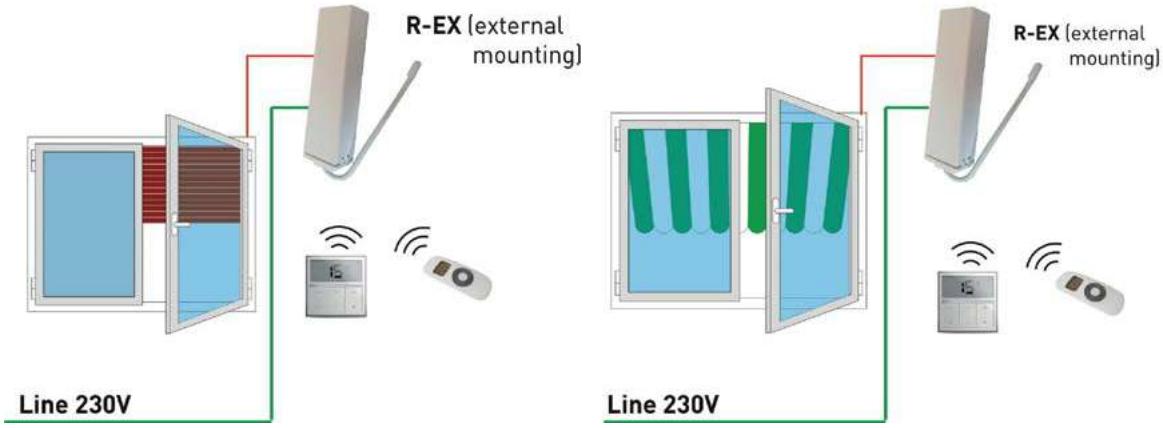

43380/301 INTERNAL RECEIVER DIAGRAM

R-IN 433.92Mhz Radio Receiver (internal mounting)
for remote control of "mechanical limit stop" tubolar motors (NO Wireless) installed on awning or roller shutter.

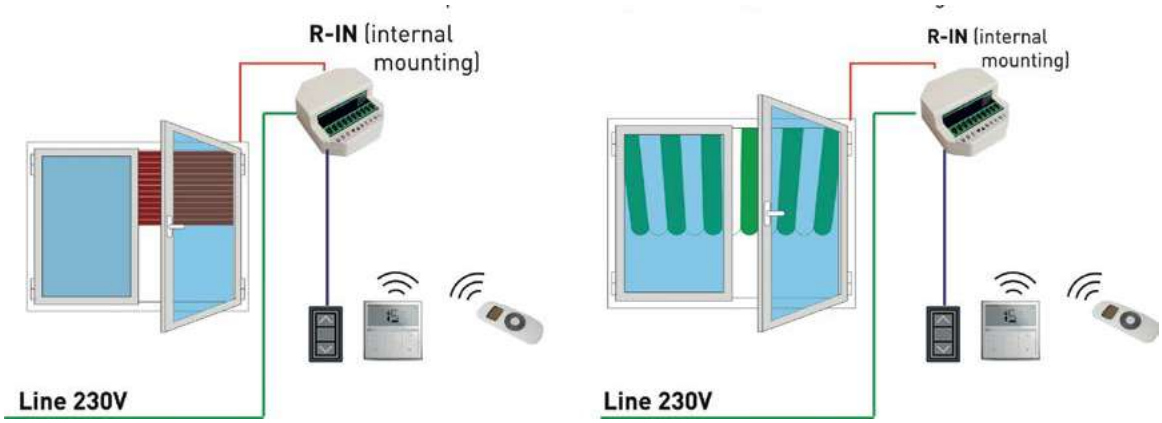

43380/305 MODULE LC DIAGRAM

LC Module for connection "LOCAL command" and "CENTRALIZED command" to match with "mechanical limit stop" tubolar motors (NO WIRELESS motors).

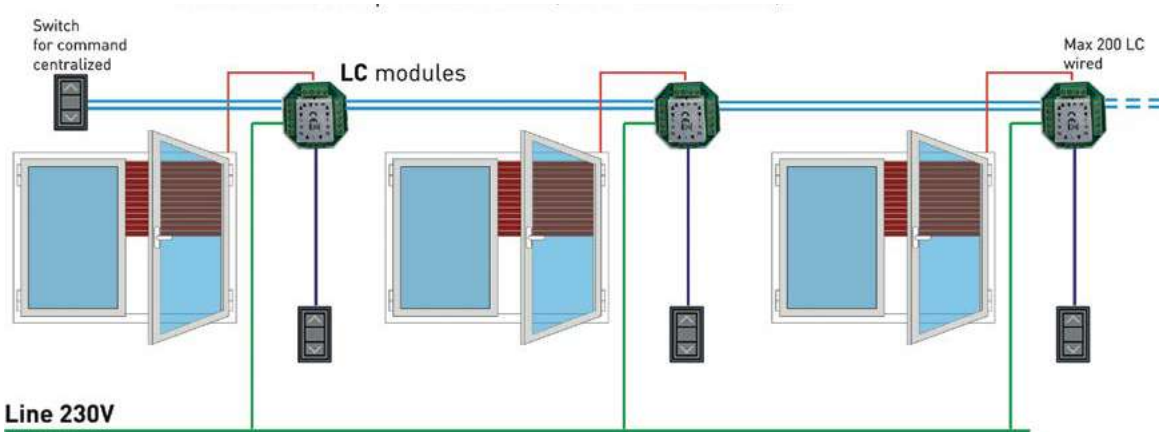

43380/304 CH4 DIAGRAM

Equipment for parallel connection of 4 "mechanical limit stop" motors with a single command.

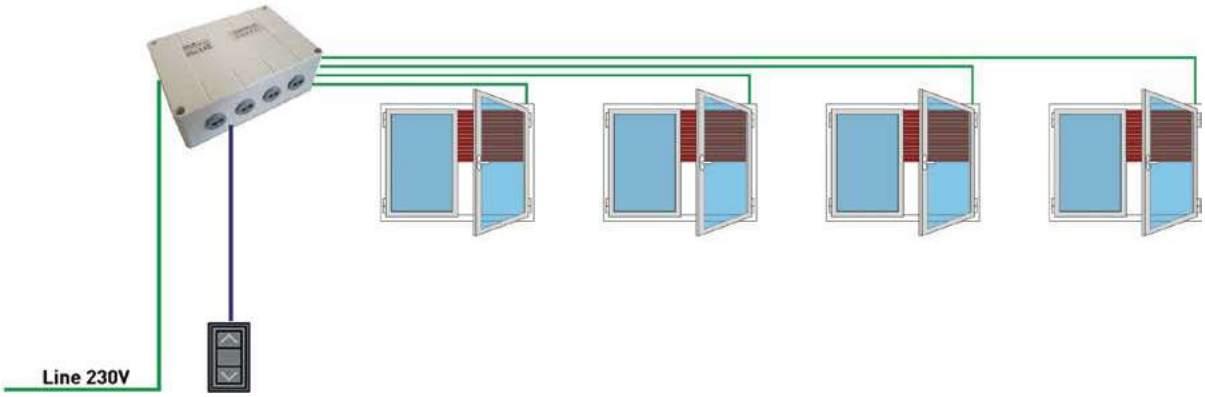

43380/308 CH8 DIAGRAM

Equipment for parallel connection of 8 "mechanical limit stop" motors with a single command.

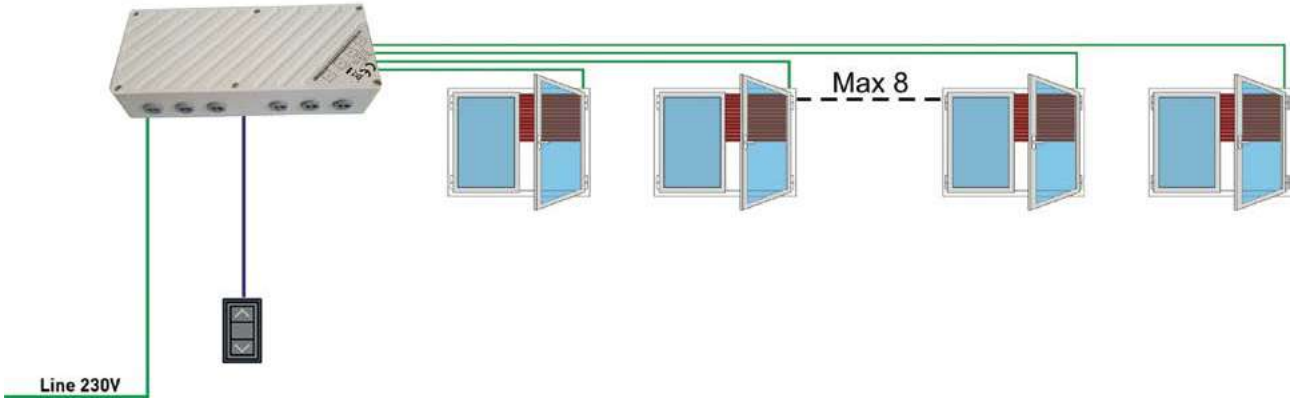

43380/307 WEATHER STATION DIAGRAM

Sun / Wind / Weather Station to be combined on automation with Radio motors (Wireless model) or with mechanical motors with matching radio receiver.

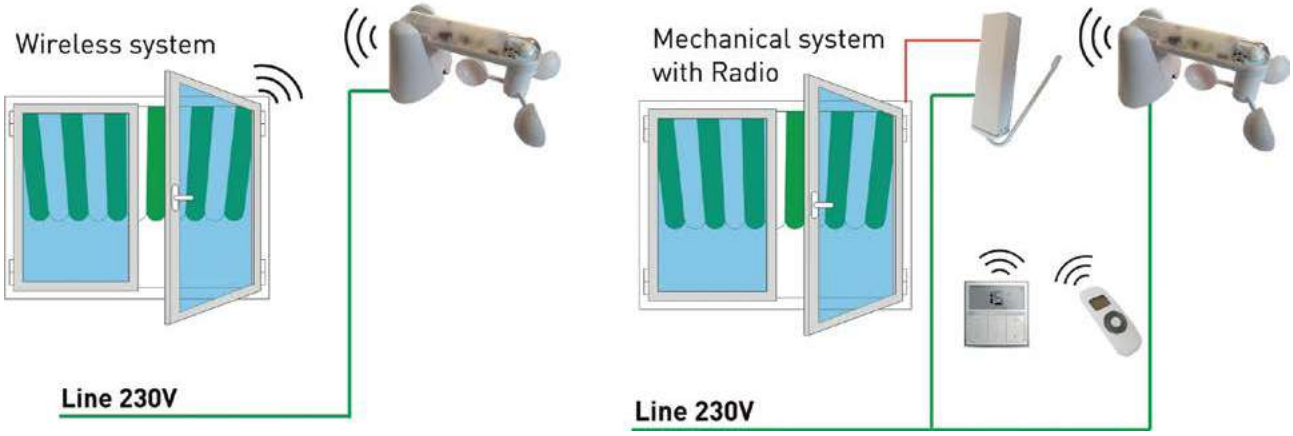

43380/306 VIB SENSOR DIAGRAM

Installations with Radio motors (Wireless model).

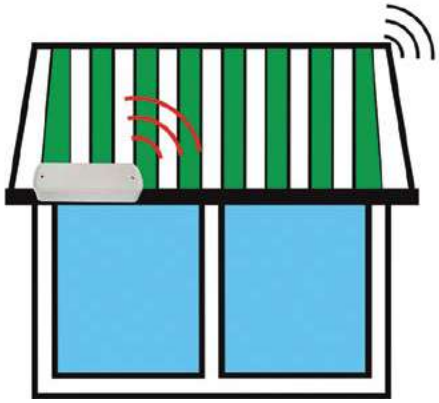

43380/303 WR-IN MODULE DIAGRAM

It receives a radio pulse and transforms it into a clean contact at the output.
Ideal for configuring Home Automation Systems.

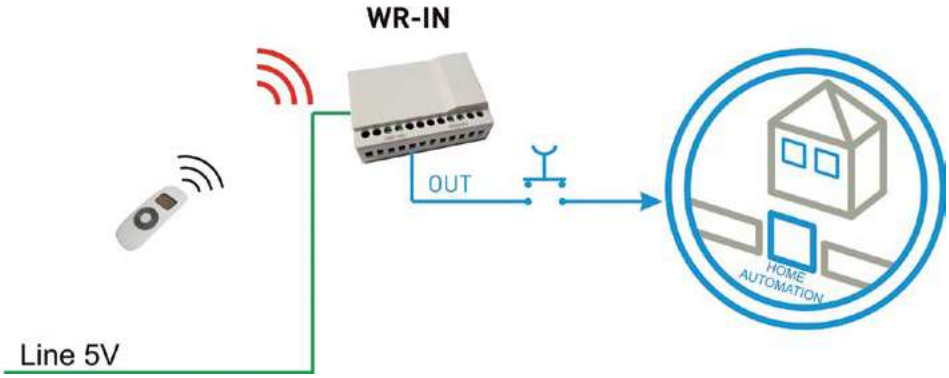

43380/302 WR-OUT MODULE DIAGRAM

It receives a normally open contact (WIRE) and transforms it into a Radio command.
To be combined only with motors with integrated radio (Wireless models).

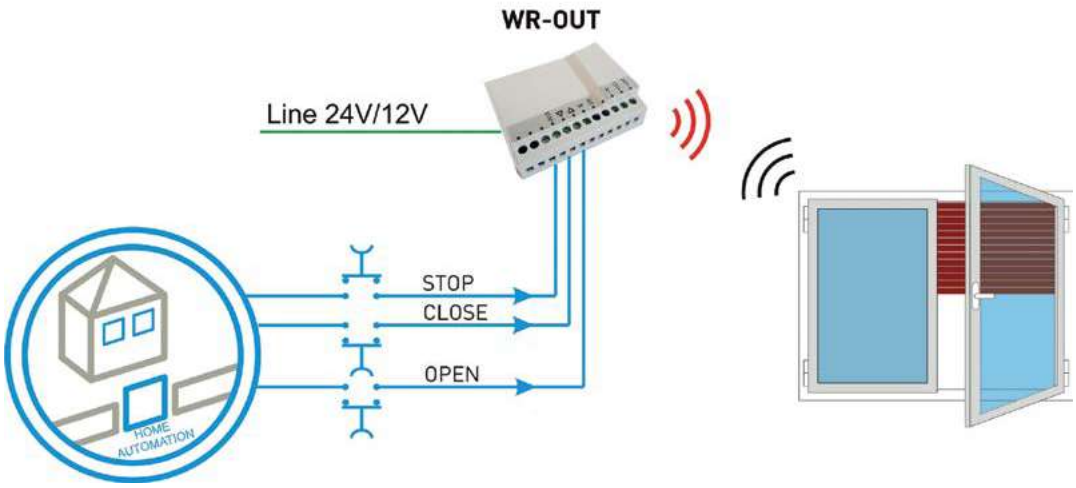

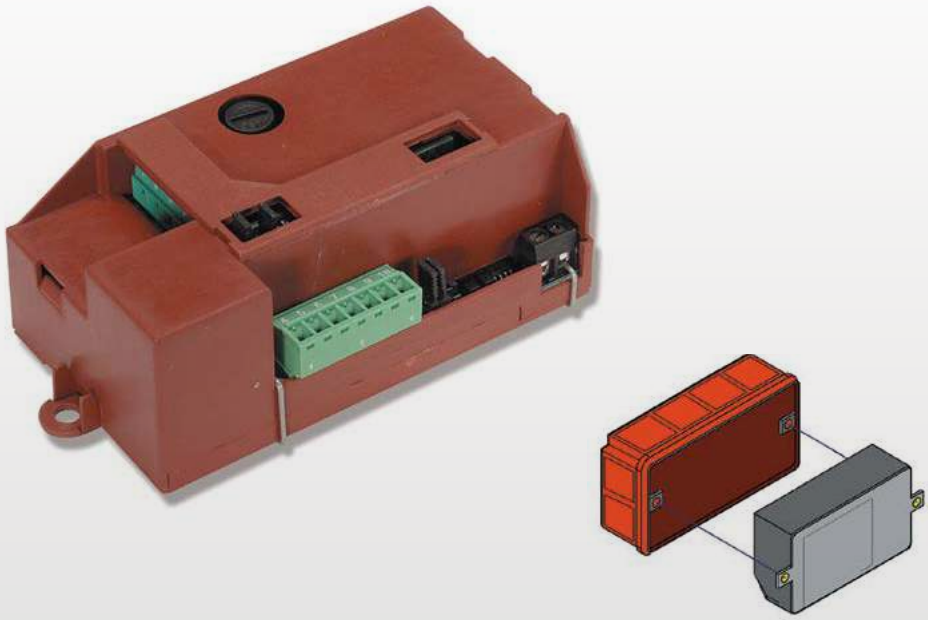

4-module flush-mounting box

ADI **MODULES** - MOTOR **CONTROL**

Radio-controlled equipment for the automation of door, window and shutter motors, lights, fans, solenoid valves, small domestic loads with 230 Vac power supply.

Cost-effective solutions for the most common automation needs in the residential and service sectors (homes, offices, shops, hotels, etc.).

The indoor modules can also be installed in 4-module flush-mounting boxes, using the appropriate fixing tabs.

Suitable for systems with different levels of complexity: from individual automation systems to coordinated systems.

Ease of installation and commissioning, built-in antenna. Wired and wireless centralised operation.

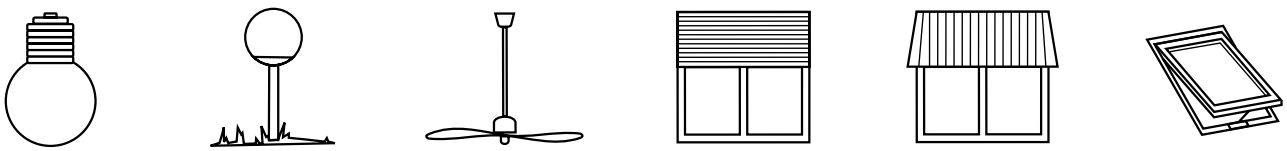

ADI MODULES - MOTOR CONTROL

INDIVIDUAL RADIO CONTROL: M230HR

Radio control with portable two-channel transmitters (TM4L) or wall-mounted transmitters (TP2-BN, TP2-NR).

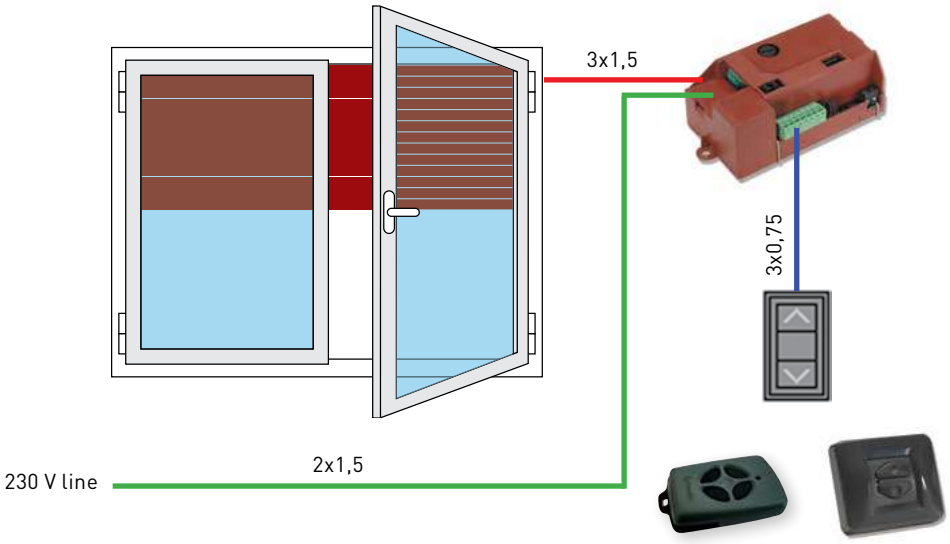

INDIVIDUAL WIRED AND WIRELESS CONTROLS: M230HR

Individual low-voltage wired control with standard, even pre-existing, push-buttons and radio control with portable two-channel transmitters (TM4L) or wall-mounted transmitters (TP2-BN, TP2-NR).

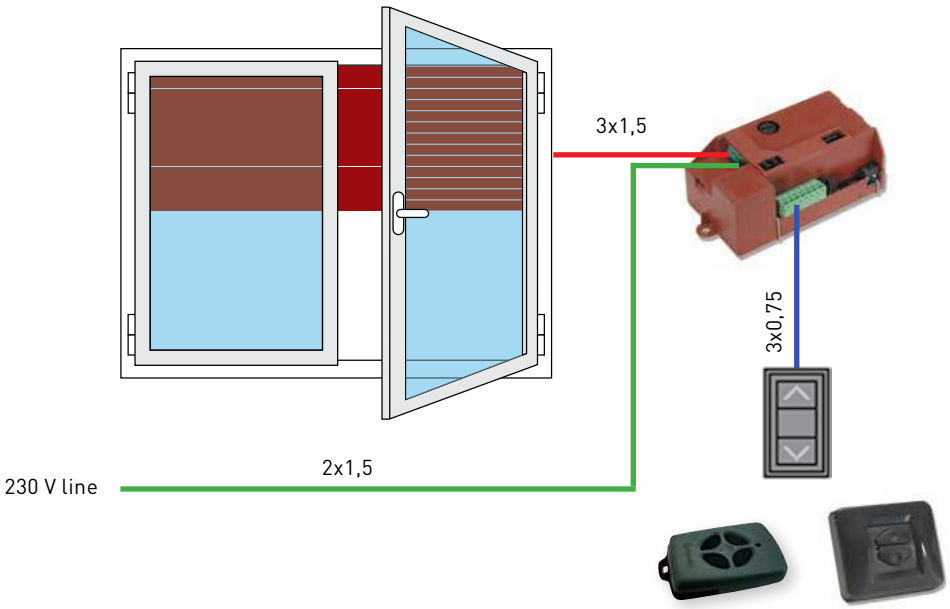

ADI MODULES - MOTOR CONTROL

INDIVIDUAL WIRED AND MULTIPLE WIRELESS CONTROLS: M230HR

Individual low-voltage wired control with standard, even existing push-buttons and wireless control with portable multichannel transmitters (TM4L, TR14). Simple configuration allows all modules to be controlled from a single remote control.

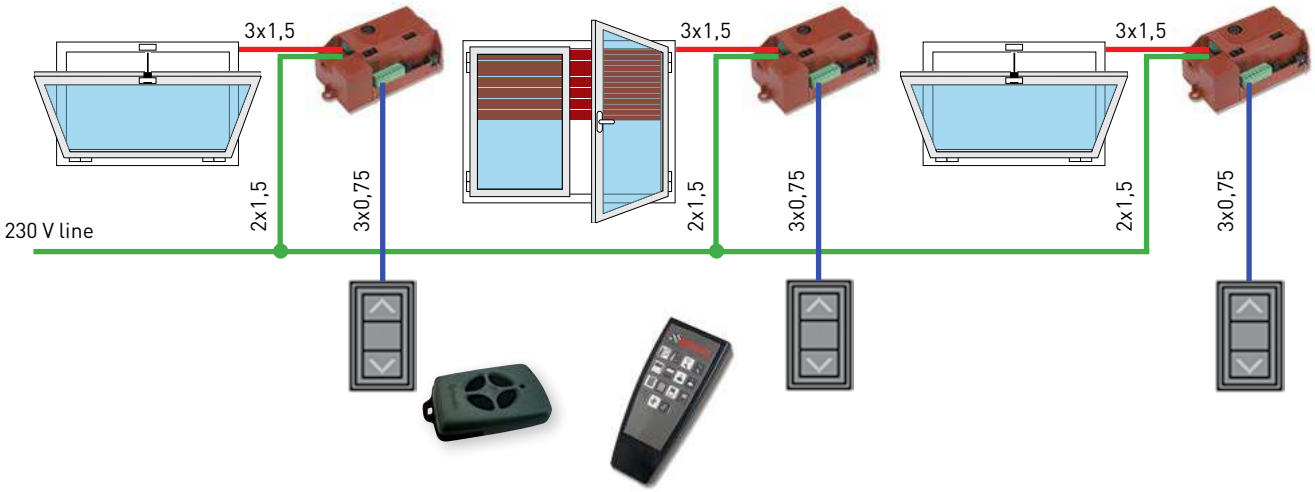

CENTRALISED WIRED AND WIRELESS CONTROLS: M230HR

Indoor modules can receive individual controls and centralised priority wired controls.
Such controls can come from timers, weather units, alarm systems etc. as well as from simple manually-operated switches. Priority centralised controls take precedence over local controls as long as they remain active or until the end of the operation. Priority centralised controls can be used to create simple but effective coordinated control "scenarios":
for instance, in an office, with a single pulse control it is possible to implement an "exit" scenario that provides for the closing of all windows and turning off of all lights.

The same functions can be achieved with wireless controls, simply by configuring the control modules. For example a TR14 remote control can be used to control "scenarios" as well as controlling individual operators.

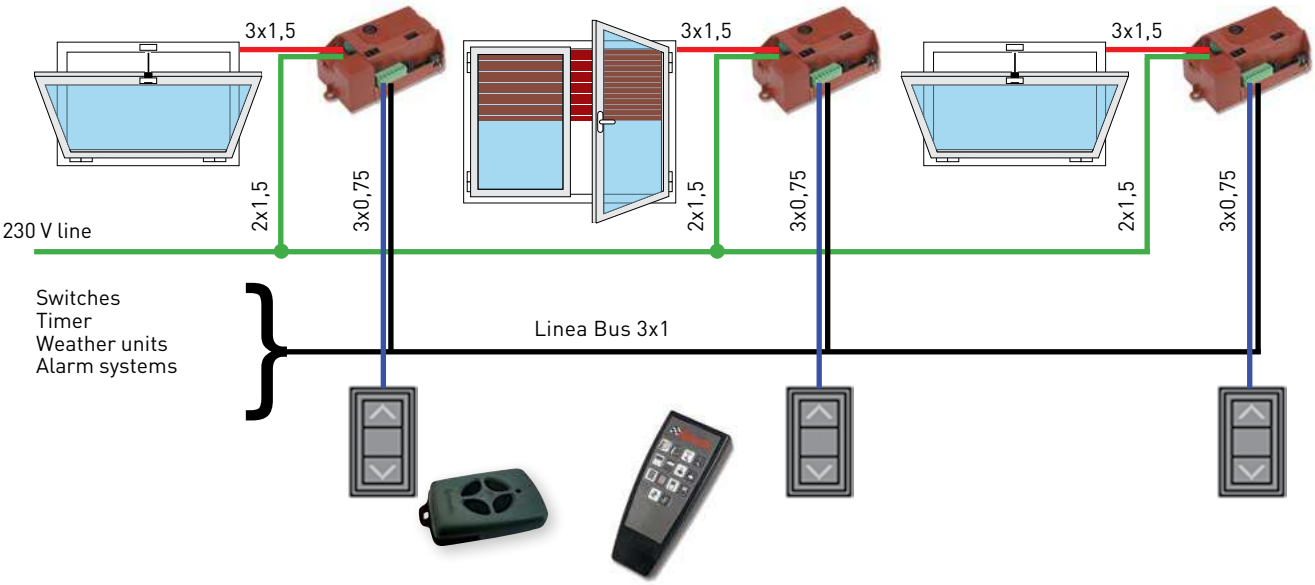

ADI MODULES - MOTOR CONTROL

USE WITH WEATHER UNIT: M230HR

Automatic closing control from a weather unit on dedicated priority input.

Low-voltage wired control with standard outdoor switch and wireless control with portable two-channel transmitters (TM4L) or wall-mounted transmitters (TP2-BN, TP2-NR).

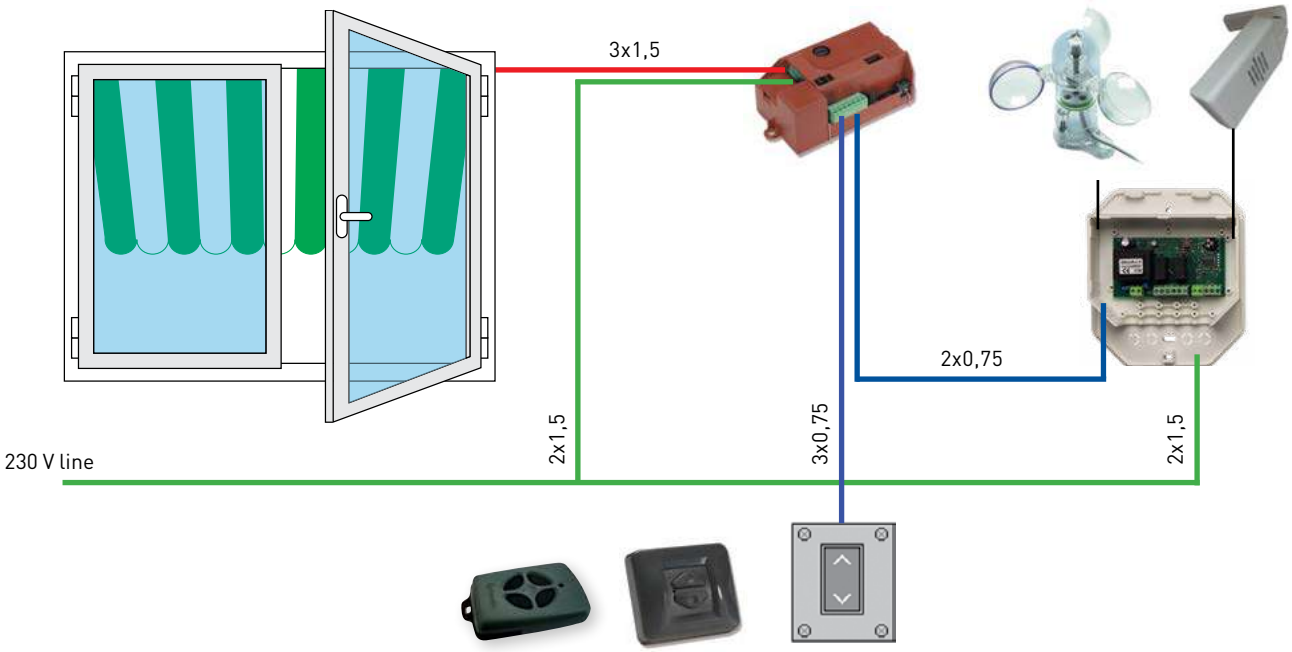

ADI MODULES - RX230 RECEIVER MODULE

2-channel receiver module with 2 clean contacts for controlling low-voltage loads or pulse control for gate control units, theft-alarm etc.

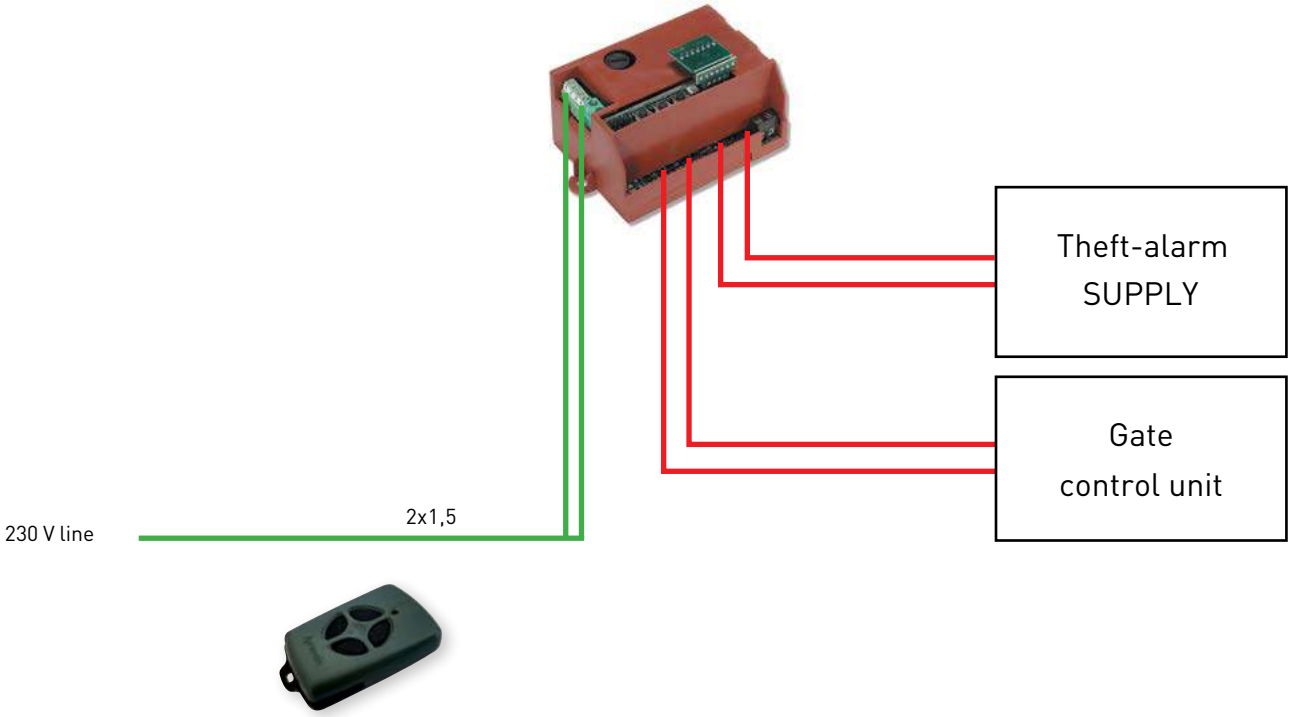

ADI MODULES - MOTOR CONTROL

TECHNICAL DATA	M230HR
POWER SUPPLY	Single-phase 230 Vac (+ 6% - 10%) - 50 Hz
MOTOR VOLTAGE	230 Vca
PROTECTION FUSE	5 A
MAX. POWER W	600
EQUIPMENT CONSUMPTION	2 W max.
ACCESSORY POWER SUPPLY 24 VDC	Not available
ACCESSORY POWER SUPPLY PROTECTION. FUSE	Not available
MAX. SECTION OF POWER SUPPLY CABLES	1,5 mm^2
MAX. SECTION OF MOTOR CABLES	1,5 mm^2
MAX. SECTION OF CONTROL CABLES	1 mm^2
RADIO FREQUENCY	433.92 Mhz
USEFUL RANGE	120 metres in free field with optional antenna
OPERATING TEMPERATURE	-20° +70° C
STORAGE TEMPERATURE	-40° +85° C
RELATIVE HUMIDITY	90% max. (non condensing)
PROTECTION DEGREE	IP20
INSTALLATION	Indoors, in a dry, not dusty area
MODULE CONTAINER	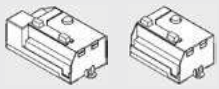

FEATURES	M230HR
Local opening	Removable terminal board
Local closing	Removable terminal board
Centralised opening	Removable terminal board
Centralised closing	Removable terminal board
Stop	Removable terminal board
Safety device	Removable terminal board

OPERATING MODES	
Local opening	YES
Local closing	YES
Centralised opening	YES
Centralised closing	YES
Stop	YES
Dead man	YES
Semi-automatic open/close	YES
Semi-automatic step-by-step	YES
Automatic	YES

OUTPUTS	
Outputs	2 relays for motor control with HW and SW interlock

OTHER FUNCTIONS	
Wireless control memorisation:	Wireless self-learning - Max. 496 different users

CONFIGURATIONS	
Operating time	On module and wireless
Pause time	On module and wireless
TX buttons - Wireless controls	On module and wireless

PRESETS	
Operating logics	Semi-automatic Open/Close
Operating time	45 s (programmable from 0 to 180 seconds)
Pause time	45 s (programmable from 0 to 180 seconds)
Stop input	Disabled (JP5 closed)
Safety device input	Disabled (JP6 closed)

ADI MODULES - LIGHT CONTROL

TECHNICAL DATA	RX230
POWER SUPPLY	Single-phase 230 Vca (+ 6% - 10%) - 50 Hz
LOAD VOLTAGE	0-24 Vcc Vca
PROTECTION FUSE	3,15 A
EQUIPMENT CONSUMPTION	2 W max.
MAX. SECTION OF POWER SUPPLY CABLES	1,5 mm^2
MAX. SECTION OF CABLES FOR LOADS	1,5 mm^2
MAX. SECTION OF CONTROL CABLES	~
RADIO FREQUENCY	433.92 Mhz
USEFUL RANGE	120 metres in free field with optional antenna
OPERATING TEMPERATURE	-20° +70° C
STORAGE TEMPERATURE	-40° +85° C
RELATIVE HUMIDITY	90% max. (non condensing)
PROTECTION DEGREE	IP20
INSTALLATION	Even outdoors
MODULE CONTAINER	

LOAD CONTROL	rx230
No. of relays	2

MAX. APPLICABLE LOADS	
Induction motor or transformer	1 A
Resistive load	1 A
Incandescent lamp	1 A
Fluorescent lamp	1 A

WIRED INPUTS	
Channel 1 control	~
Channel 2 control	~
Centralised activation	~
Centralised deactivation	~

WIRELESS INPUTS	
Channel 1 control	YES
Channel 2 control	YES
Centralised activation	~
Centralised deactivation	~

OPERATING MODES	
ON/OFF	YES
Timer 1-255 seconds	YES
Timer 1-255 minutes	YES
Dead man	YES

OTHER FUNCTIONS	
Wireless control memorisation:	Wireless self-learning - Max. 496 different users

CONFIGURATIONS	
Channel 1 timer	On module and wireless
Channel 2 timer	On module and wireless
TX buttons - Wireless controls	On module and wireless

PRESETS	
Operating logics	ON/OFF
Channel 1 timer	1 second
Channel 2 timer	1 second

ADI MODULES - ACCESSORIES

MOTOR CONTROL MODULES

	ITEM NUMBER	DESCRIPTION
	43665/004	M230HR - 230 Vac motor control module, wired and wireless control, indoor installation, suitable size for installation in "504" flush-mounting box
	43645/006	MCT - Centralised-operation control module for tubular motors with interface card specifically for the control of several parallel-connected tubular motors

TWO-CHANNEL RECEIVER MODULES

	ITEM NUMBER	DESCRIPTION
	41923/055	RX230 - Two-channel receiver module with 2 clean contacts for controlling low-voltage loads or pulse control for gate control units, theft-alarm etc., suitable size for installation in "503" flush-mounting box

ACCESSORI

	ITEM NUMBER	DESCRIPTION
	41929/001	ANT433 - 433.92 MHz external antenna with 4.5 m coaxial cable and ground connection in combination with 43665/004 or 43665/015 or 41923/055
	41905/024	TM4L - 433.92 MHz four-channel remote control
	41903/014	TR14 - 433.92 MHz 14-channel portable remote control (until stocks last)
	41905/001	TP2-BN - White wall-mounted two-channel 433.92 MHz remote control, compatible with BTicino living International/Light wiring systems
	41905/002	TP2-NR - Black wall-mounted two-channel 433.92 MHz remote control, compatible with BTicino living International/Light wiring systems
	43701/050	PP-BN - Plate for white wall-mounted remote control
	43701/051	PP-NR - Plate for black wall-mounted remote control

MOTOR CONTROL UNITS, WEATHER UNITS AND ACCESSORIES

24 V AND 230 V MOTOR CONTROL UNITS, WEATHER UNITS, RAIN, WIND, SMOKE SENSORS.

MATCHING OF MOTOR CONTROL UNITS WITH OPERATORS AND WEATHER UNITS

			24 V		230 V
		CV1N	CV10	CF10/2 *	4M
	OPERATOR				
POWER SUPPLY **24 V**	**O2M 24 V**	~	4 Motors	4 Motors	~
POWER SUPPLY **24 V**	**WI-MATIC ATC300E 24V**	~	4 Motors	4 Motors	~
POWER SUPPLY **24 V**	**DUO SYSTEM 24V**	1 Motors	10 Motors	10 Motors	~
POWER SUPPLY **230 V**	**APRILINEARE 230 V**	~	~	~	4 Motors
POWER SUPPLY **230 V**	**WI-MATIC ATC300E**	~	~	~	4 Motors
POWER SUPPLY **230 V**	**APRICOLOR VARIA - VARIA T 230 V**	~	~	~	4 Motors
POWER SUPPLY **230 V**	**ST 450 N**	~	~	~	4 Motors
POWER SUPPLY **230 V**	**DUO SYSTEM 230V**	~	~	~	4 Motors
POWER SUPPLY **230 V**	**TUBULAR REVOLUX**	~	~	~	4 Motors

WEATHER UNITS

PV1-N 230 V	YES	YES	YES	YES

NOTE: PV1 control unit can be installed with:

RV-N - Anemometer

SP1-N - Rain sensor

NOTE: * The CF10/2 control unit can be installed with:

Buffer battery

MOTOR CONTROL UNITS, WEATHER UNITS AND ACCESSORIES

MOTOR CONTROL UNITS

	ITEM NUMBER	DESCRIPTION
	43660/002	CV1N - 24 Vdc max. 1A motor control unit, inputs for local and centralised opening and closing commands, power adjustment potentiometer 300 mA to 600 mA, 24 Vdc accessory power supply, can be connected in parallel with other CV1N units
	43660/007	CV10 - 24 Vdc max. 8A motor control unit, inputs for local and centralised opening and closing commands, can be connected in parallel with other CV10 units
	43645/005	4M - control unit for simultaneous control of four 230 Vac motors, inputs for local and centralised opening and closing commands, can be connected in parallel with other 4M units
	43660/006	CF10/2 - motor control unit (up to ten 24 Vdc max. 8A motors), 24Vdc max. 500 mA accessory power supply output, preset for backup battery and recharge circuit, built-in control panel for operators, rain/wind sensor and thermostat management, indicator LEDs, internal emergency thermostat triggered at + 70° C, 2.2 KOhm balance line for max. 24 smoke and heat detectors, remote alarm signalling output

ACCESSORIES - CF 10/2

	ITEM NUMBER	DESCRIPTION
	43660/101	CF10/2 - Backup battery (no.2 x 12V - 5Ah batteries)

WEATHER UNITS AND SENSORS

	ITEM NUMBER	DESCRIPTION
	43665/021	PV1-N (power supply 230 Vac) control unit Rain-Wind with wind control up to 70Km/h
	43665/022	PV1-N Plus (power supply 230Vac) control unit Rain-Wind with wind control up to 100Km/h
	PV1-N, PV1-N PLUS weather units can be connected to an anemometer and/or rain sensor to provide an alarm signal output (normally-open relay with no-voltage contacts) that can be used to send closing commands	
	43701/065	RV-N - Anemometer
	43701/064	SP1-N - Rain sensor

05.

SLIDING DOORS

SLIM SNK
WING NK
WING NK H150
MODULAR SOLUTION
DOOR PROFILES
OVER - OVER HEAVY - OVER EVO N

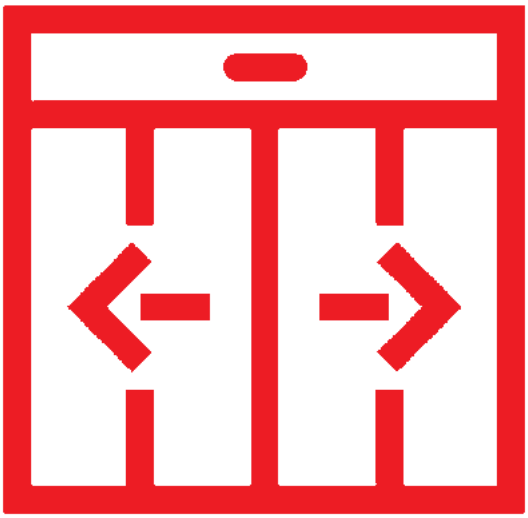

AUTOMATION SYSTEMS FOR SLIDING DOORS

WING NK / **WING** NK H150 / **SLIM** SNK

Smooth, accurate, silent movement.
Aprimatic offers a wide range of automation solutions for sliding doors. Products designed to provide top reliability in a wide range of applications for offices, shops and supermarkets.
All automation components feature compact, attractively designed extruded aluminium housings. The units are easy to install and do not require specialised skills or masonry work.
The automation units are equipped with intelligent electronic control systems which require very few adjustments. This makes for quicker installation and easier maintenance operations, while guaranteeing total safety.

Drive system with a toothed HPPD rubber drive belt. The belt is reinforced with a glass fibre core and has a non-slip coating. Modular carriages with large-diameter reinforced-nylon wheels running on upper and lower semicircular cross-section rails. The carriage modules feature an anti-derailment, anti-pitching, load-balancing system. Reversible DC Gear motor with electronic pulse width control.
2-channel optical encoder connected to the motor for electronic position and speed control. The control units ensure the highest levels of safety and reliability. Performance features include: stroke length, wing weight, braking force and braking distance self-learning. They also guarantee the emergency battery charge. Compact and aesthetically pleasing aluminium profile covers, available in natural, anodised silver and anodised black versions.

Wing NK
Reversible single-motor automation for sliding doors. Suitable for shops, supermarkets and offices with high traffic levels. Designed for medium-heavy loads.

Max. load for heavy-duty use (4 cycles/min.):
For 2 wings, 100 kg each for one wing 150 kg.
Max. load for continuous use (6 cycles/min.):
For 2 wings, 80 kg each for one wing 130 kg.

Wing NK H150
New reversible single-motor automation for sliding doors. Suitable for shops, supermarkets and offices with high traffic levels. Designed for medium-heavy loads.

Max. load for heavy-duty use (4 cycles/min.):
For 2 wings, 150 kg each for one wing 150 kg.
Max. load for continuous use (6 cycles/min.):
For 2 wings, 130 kg each for one wing 150 kg.

Slim SNK
Reversible single-motor automation for sliding doors. Suitable for shops, supermarkets and offices with medium traffic levels and medium-light loads.

Max. load for NON intensive use (<3 cycles/min.):
For 2 wings 70 kg each, for one wing 100 kg.
Max. load for heavy-duty use (4 cycles/min.):
For 2 wings, 50 kg each for one wing 70 kg.

AUTOMATION SYSTEMS FOR SLIDING DOORS

TECHNICAL DATA	WING NK 1 WING NK 2	WING NK H150 1 WING NK H150 2	SLIM SNK 1 SLIM SNK 2
GENERAL FEATURES			
AUTOMATION POWER SUPPLY	Single-phase 230 Vac (+/- 10%) – 50 Hz		
MOTOR POWER SUPPLY	24 Vdc with high performance toroidal transformer		
ACCESSORY POWER SUPPLY	24 Vdc/Vac	24 Vdc/Vac	24 Vdc/Vac
OPERATING TEMPERATURE RANGE	-20°+60° C	-20°+60° C	-10°+60° C
INSTALLED POWER (MAX.)	300 W	300 W	130 W
DIMENSIONS in mm			
BULK (HxD) mm	152x172	152x172	152x172
MIN./MAX. BEAM LENGTH mm	1,810-6,010	1,810-6,010	1,810-5,410
MIN./MAX. PASSAGE SPAN mm	850-2,950	850-2,950	850-2,650
WING LOAD CAPACITY in kg			
MAX. LOAD	100x1 100x2	150x1 150x2	100x1 70x2
SPEED in cm/s			
MIN./MAX. OPENING SPEED	11-75 (1 wing) 22-150 (2 wings)	11-75 (1 wing) 22-150 (2 wings)	40-60 80-120
MIN./MAX. CLOSING SPEED	11-75 (1 wing) 22-150 (2 wings)	11-75 (1 wing) 22-150 (2 wings)	11-50 22-100
APPROACHING SPEED	6	6	6
DRIVE TRANSMISSION			
TRANSMISSION	Toothed HPPD belt		
CARRIAGE TYPE	Modular, 3-wheel carriages (2 for each wing)		
ROLLING TYPE	On reinforced-nylon wheels		

AUTOMATION SYSTEMS FOR SLIDING DOORS

TECHNICAL DATA	WING NK 1 WING NK 2	WING NK H150 1 WING NK H150 2	SLIM SNK 1 SLIM SNK 2
SELF-LEARNING FUNCTIONS (at power on or after a reset)			
OPENING STROKE LENGTH	YES	YES	YES
CLOSING STROKE LENGTH	YES	YES	YES
WING WEIGHT	YES	YES	YES
BRAKING SPACES (adaptive)	YES	YES	YES
OPENING SPEED	YES	YES	YES
CLOSING SPEED	YES	YES	YES
STANDARD FUNCTIONS (selected from key-operated switch or keypad)			
NIGHT LOCK	YES	YES	YES
AUTOMATIC TWO-WAY	YES	YES	YES
AUTOMATIC EXIT ONLY	YES	YES	YES
AUTOMATIC ENTRY ONLY	YES	YES	YES
COMPLETELY OPEN	YES	YES	YES
AUTOMATIC PARTIAL OPENING	YES	YES	YES
MANUAL OPENING	~	~	~
NIGHT SERVICE OPENING	~	~	~
RESET	YES	YES	YES
EMERGENCY FUNCTIONS			
INPUT FOR EMERGENCY PUSH-BUTTON	YES	YES	YES
ELECTRIC EMERGENCY OPENING DEVICE WITH BATTERY	YES	YES	YES
EMERGENCY OPERATION WITH BATTERY	YES	YES	YES
STOP INPUT	YES	YES	YES
SAFETY FUNCTIONS			
INPUT FOR SAFETY PHOTOCELL	YES	YES	YES
OBSTACLE DETECTION (adaptive)	YES	YES	YES
ADJUSTABLE PARAMETERS			
OPENING SPEED	YES	YES	YES
CLOSING SPEED	65% opening speed (dipswitch)	YES	YES
APPROACHING SPEED	YES	YES	YES
OPEN PAUSE TIME	YES	YES	YES
THRUST FORCE	YES	YES	YES
ELECTRIC LOCK ACTUATION DELAY	YES	YES	YES
PARTIAL OPENING PERCENTAGE	YES	YES	YES
DIAGNOSTICS			
IDENTIFICATION OF DIFFERENT ALARMS AND WARNINGS	YES	YES	YES
ADDITIONAL FUNCTIONS (OPTIONAL)			
BISTABLE ELECTRIC LOCK WITH SELF-TEST	YES	YES	YES
BUILT-IN EMERGENCY BREAK-OUT OPENING DEVICE	YES	YES	YES
INTERLOCK FUNCTION	YES	YES	YES
MANUAL RELEASE	YES	YES	YES

POSSIBLE CONFIGURATIONS

EXAMPLES OF AUTOMATION SYSTEM CONFIGURATIONS

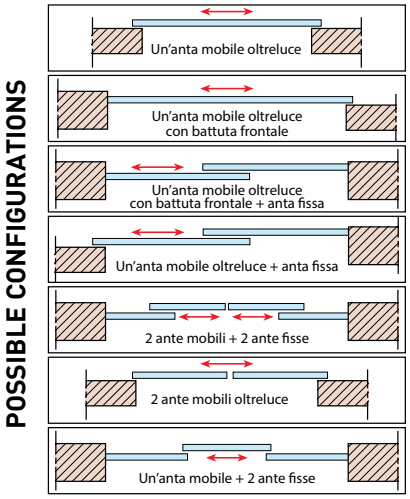

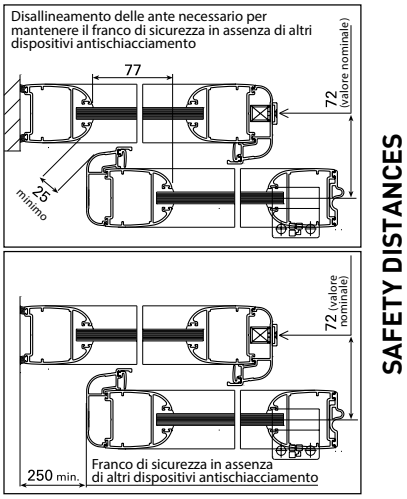

AUTOMATION + COVER + SC6 + ER7 + NS 48*

AUTOMATION + COVER + SC6 + ER7 + 1-2 RADAR + NS 48*

AUTOMATION + COVER + SC6 + ER7 + 1-2 RADAR + NS 48* + EB2

AUTOMATION + COVER + SC6 + ER7 + 1-2 RADAR + NS 48* + EB2 + SME

+ DCA

AUTOMATION + COVER + SC6 + ER7 + 1-2 RADAR + NS 48* + EB2

+ RADIO

+ DCA

AUTOMATION + COVER + SC6 + ER7 + 1-2 RADAR + NS 48* + EB2 + SME

+ RADIO

Key	
AUTOMATION	Choose the model (complete operator assembly or beam system plus module) from the available range: **WING NK - WING NK H150 - SLIM SNK**
COVER	Choose the cover with the desired surface finish from one of the following: **natural, silver**
SC6	Choose the key-operated selector (REQUIRED): **SC6 WIRELESS - SC6 EC - SC6**
ER7	Choose the photocells: **ER7**
1-2 RADAR	Choose the radar: **RI90C, DM-H22, DT90C, RSI 4C**
NS 48*	*Batteries supplied as a standard on all models
EB2	Electric lock: **EB2**
SME	Choose the Emergency Manual Release device: **SME/E - SME/I installable only with EB2**
DCA	Choose Alternative Control Devices, if necessary: **PC12E - PR5 - CT4** (see the "Electronic devices" section - refer to the initial index)
RADIO	Choose the remote control and receiver: **TM4L; PLUS SC6 WIRELESS**

AUTOMATION SYSTEMS FOR SLIDING DOORS

EX. OF AUTOMATION SYSTEM DIMENSIONING

Two-wing automation system:
Wing NK, Wing NK H150

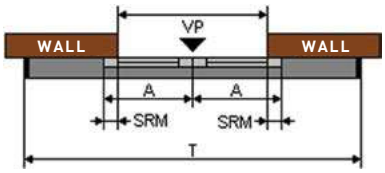

RH single-wing automation system:
Wing NK, Wing NK H150

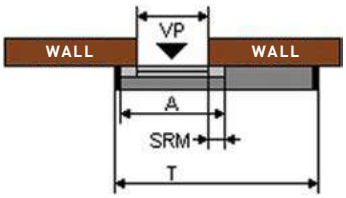

LH single-wing automation system:
Wing NK, Wing NK H150

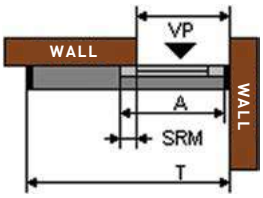

	Known A	Known VP	Known T
T	4A–2S+10	2VP+2S+10	~
VP	2(A-S)	~	(T-2S-10)/2
A	~	(VP+2S)/2	(T+2S-10)/4

Known A	Known VP	Known T
2A-2S+10	2VP+2S+10	~
A-2S	~	(T-2S-10)/2
~	VP+2S	(T+2S-10)/2

Known A	Known VP	Known T
2A-S+10	2VP+S+10	~
A-S	~	(T-S-10)/2
~	VP+2S	(T+S-10)/2

A = wing length in mm **VP** = passage span in mm **T**= beam length in mm **S** = overlap in mm

NOTE: S - The overlap (S) used in the formula = 50 mm (not binding).
The calculations for RH and LH single-wing automation systems are valid for both opening directions.
For RH single-wing automation, the actual passage span (VP) of the automation is reduced by the size of the overlap selected.

WING NK automation systems with anodised silver finish

Beam	Passage span	LH single wing	RH single wing	Double wing
2010	950	42710/201.1	42710/201.0	42710/201.2
2510	1200	42710/251.1	42710/251.0	42710/251.2
3010	1450	42710/301.1	42710/301.0	42710/301.2
3610	1750	42710/361.1	42710/361.0	42710/361.2
4010	1950	42710/401.1	42710/401.0	42710/401.2
4410	2150	42710/441.1	42710/441.0	42710/441.2
4810	2350	42710/481.1	42710/481.0	42710/481.2
5410	2650	42710/541.1	42710/541.0	42710/541.2
6010	2950	42710/601.1	42710/601.0	42710/601.2

Order the automation with the next standard length up from the one you require and then state the exact beam length you require in mm ending with 0 or 5. The standard supply includes the emergency battery unit.

WING NK H150 automation systems with anodised silver finish

Beam	Passage span	LH single wing	RH single wing	Double wing
2010	950	42715/201.1	42715/201.0	42715/201.2
2510	1200	42715/251.1	42715/251.0	42715/251.2
3010	1450	42715/301.1	42715/301.0	42715/301.2
3610	1750	42715/361.1	42715/361.0	42715/361.2
4010	1950	42715/401.1	42715/401.0	42715/401.2
4410	2150	42715/441.1	42715/441.0	42715/441.2
4810	2350	42715/481.1	42715/481.0	42715/481.2
5410	2650	42715/541.1	42715/541.0	42715/541.2
6010	2950	42715/601.1	42715/601.0	42715/601.2

Order the automation with the next standard length up from the one you require and then state the exact beam length you require in mm ending with 0 or 5. The standard supply includes the emergency battery unit.

AUTOMATION SYSTEMS FOR SLIDING DOORS

SLIM SNK automation systems with anodised silver finish				
Beam	**Passage span**	**LH single wing**	**RH single wing**	**Double wing**
2010	950	42705/201.1	42705/201.0	42705/201.2
2510	1200	42705/251.1	42705/251.0	42705/251.2
3010	1450	42705/301.1	42705/301.0	42705/301.2
3610	1750	42705/361.1	42705/361.0	42705/361.2
4010	1950	42705/401.1	42705/401.0	42705/401.2
4410	2150	42705/441.1	42705/441.0	42705/441.2
4810	2350	42705/481.1	42705/481.0	42705/481.2
5410	2650	42705/541.1	42705/541.0	42705/541.2

Order the automation with the next standard length up from the one you require and then state the exact beam length you require in mm ending with 0 or 5. The standard supply includes the emergency battery unit.

Covers for WING NK, WING NK H150, SLIM SNK automation systems		
Beam	**Natural finishing**	**Silver finishing**
2000	42102/200	42100/200
2500	42102/250	42100/250
3000	42102/300	42100/300
3600	42102/360	42100/360
4000	42102/400	42100/400
4400	42102/440	42100/440
4800	42102/480	42100/480
5400	42102/540	42100/540
6000	42102/600	42100/600

WING NK - WING NK H150 - SLIM SNK BEAM SECTION

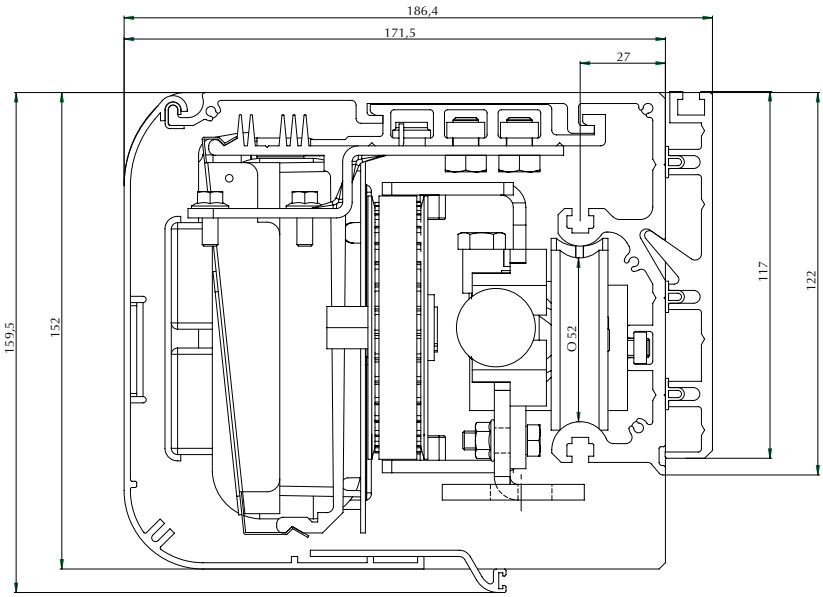

MODULAR SOLUTIONS

WING NK / SLIM SNK modules

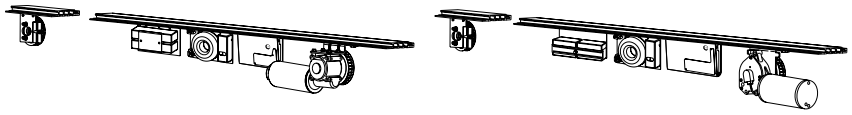

Composition

The WING NK and SLIM SNK modules consists of a module profile L=1,100 mm complete with pre-assembled components: control unit, power supply unit, motor with encoder, emergency batteries. The Module pack also includes an idle pulley and two side flanges.

These modules allow to construct any type of "Wing NK", "Wing NK H150" or "SLIM SNK" automation systems with the same technical characteristics and functions as described above. The NK module profile is supplied ready for installation, complete with the control unit, power supply unit, motor and batteries ready-assembled.

To complete an automation you will need the following: the "L" beam (of convenient length), the hardware kit; the toothed belt and the cover.

MODULE DESCRIPTION

	DESCRIPTION	BEAM Min.	BEAM Max.	PASSAGE SPAN Min.	PASSAGE SPAN Max.
	Wing NK Module L=1100 mm	1810	6010	850	2950
	SLIM SNK Module	1810	5410	850	2650

AVAILABLE NK MODULES AND COMPULSORY AND OPTIONAL COMPONENTS

	ITEM NUMBER	DESCRIPTION
	42902/003	WING NK module L=1,100 mm
	42900/002	SLIM SNK Module
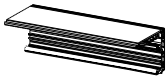	**42910/006**	L shaped beam* with anodised silver finish L=7,000 mm
	42000/010	Cover* with natural finish L=7,000 mm
	42000/001	Cover* with silver finish L=7,000 mm
	42280/068	Drive belt for modules L=1,100 (in pack of 50mt)
	42710/100	Drive belt for modules L=1,100 (in pack of 50 m) Toothed belt 7 m / RR
	Single wing **42902/053** Double wing **42902/051**	Hardware Kit for SLIM SNK and WING NK modules The kit consists of all the mechanical components needed to assemble the automation system and includes: carriage units, connection plates, mechanical stop plates and a pack of nuts/bolts/screws
	Single wing **42902/054** Double wing **42902/055**	Hardware Kit for WING NK H150 module The kit consists of all the mechanical components needed to assemble the automation system and includes: carriage units, connection plates, mechanical stop plates and a pack of nuts/bolts/screws
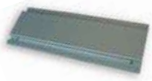	**42902/056**	NK 250 accessory mounting profile, every accessory requires one profile

* All profiles are supplied in lengths of 7 m which cannot be split.

MODULAR SOLUTIONS

EX. OF AUTOMATION SYSTEM DIMENSIONING

WING NK - WING NK H 150 MODULE

WING NK / NK H150 module:
RH single-leaf and double-leaf

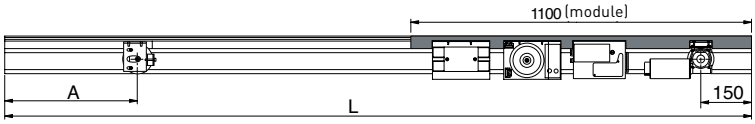

WING NK / NK H150 module:
LH single-wing

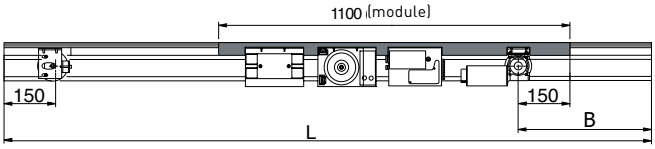

"L" (mm)	"A" (mm)	"B"(mm)
1800	300	300
2000	350	350
2400	450	450
2500	475	475
2800	550	550
3000	600	600
3200	650	650
3600	750	750
4000	850	850
4400	950	950
4800	1050	1050
5400	1200	1200
6000	1350	1350

SLIM SNK MODULE

SLIM SNK module:
RH single-leaf and double-leaf

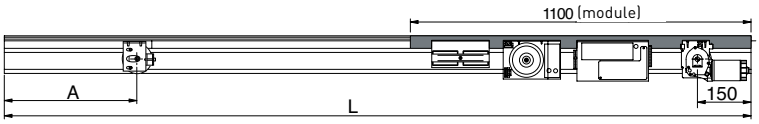

SLIM SNK module:
LH single-wing

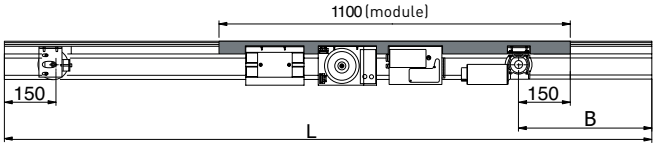

"L" (mm)	"A" (mm)	"B"(mm)
1800	275	300
2000	325	350
2400	425	450
2500	450	475
2800	525	550
3000	575	600
3200	625	650
3600	725	750
4000	825	850
4400	925	950
4800	1025	1050
5400	1175	1200

KIT UPGRADE WING NK

Application range:
The WING NK upgrade kit can only be installed on: **Automatic doors of the WING or WING EVO model** on the catalogue since 2003.

TECHNICAL DATA

AUTOMATION POWER SUPPLY	SINGLE-PHASE 230 Vac (+/- 10%)
MOTOR POWER SUPPLY	24 Vdc
TEMPERATURE	-10° +60° C
BATTERY CHARGER	BUILT-INTO WING NK CARD
AUTOMATIC DIAGNOSTIC	SEVERAL TYPES OF BUZZER ALARMS
ADJUSTABLE PARAMETERS:	APPROACH SPEED DURING OPENING AND CLOSING DOOR OPEN PAUSE TIME THRUST FORCE ELECTRIC LOCK ACTIVATION DELAY PARTIAL OPENING PERCENTAGE MASTER/SLAVE EMERGENCY OPENING PHOTOCELLS USED SETTINGS FOR TAMPERING, EMERGENCY OPENING, ELECTRIC LOCK AND POWER FAILURE

The Upgrade KIT allows all Aprimatic automatic door customers (Wing and Wing Evo series) to replace the basic components to adapt the "old"system to the new performance levels of the new WING NK series automation systems.
The mechanical operations required for the replacement are extremely simple (the same bolts and component measurements are used) while the electronic operations are even simpler: just disconnect the old control unit and the peripheral units from the terminals and insert the new card.
Once it is powered up, the new Wing NK control board will do all the rest: the new HIGH-TECH software requires no manual operations: it will automatically learn all the necessary settings (such as wing weights, etc.) and self-calibrate as efficiently as possible.

ITEM NUMBER	DESCRIPTION
42902/052	WING NK UPGRADE KIT The package includes: Gear motor unit, Wing NK control unit, idle pulley and fixing screws

Stylish and functional design.

The key-operated selector units can be used to set and select 6 operating modes for automatic sliding doors. The SC6EC and SC6 WIRELESS key-operated selector units can be surface wall-mounted or flush-mounted in a standard 503 electrical box.
The Reset push-button on the key-operated selector unit is small and recessed to prevent accidental operation.

CONTROL AND SAFETY DEVICES

	ITEM NUMBER	DESCRIPTION
	42282/078	SC6 WIRELESS - 6-way key-operated selector unit for setting standard functions, it operates by radio waves with a frequency of 433.92 MHz, installation: wall-mounted or flush-mounted with 503 box, PLUS SC6 WIRELESS receiver required
	42282/073	SC6EC - 6-way key-operated selector unit for standard function setting, installation: wall-mounted or flush-mounted in 503 box, 4-metre cable with connector
	41923/007	PLUS SC6 WIRELESS RECEIVER - Installation on NK beams requires the NK 250 mm profile, SC6 WIRELESS key-operated selector and/or TR2 or TR4 transmitter required
	42282/070	SC6 - 6-way key-operated selector unit for standard function setting installation: wall-mounted - 4-metre cable with connector
	41905/004	TM4 - 433.92 MHz four-channel remote control
	41905/024	TM4L- 433.92MHz four-channel remote control with only programming mode 0 - Standard

PHOTOCELLS

	ITEM NUMBER	DESCRIPTION
	42301/001	ER7 single photocell
	42301/002	ER7 Double photocells

CONTROL AND SAFETY DEVICES

RADAR

The range encompasses
all the technologies used for automatic door opening devices, such as microwave, active infrared and passive infrared.

RADAR

	ITEM NUMBER	DESCRIPTION
	42283/094	RI-3H - Active infrared radar
	42283/092	RI90C - Radar infrared safe
	42283/081	DM41 - Bidirectional door sensor (microwave technology)
	42283/090	DT90C double technology safe radar
	42283/096	RSI 4C - Door-wing mounted swing door safety sensor, (active infrared distance measurement technology)
	42283/098	MS20 Microwave contactless switch (Based S4)

TECHNICAL DATA	DM41	DT90C	RI-3H	RI90C	RS-I4C
TECHNOLOGY	Bidirectional Microwave	Microwaves Active infrared	Active infrared	Active infrared	Active infrared
INSTALLATION HEIGHT	rom 1,8m up to 3m max	From 1,8 up to 4m max	3 m max	from 1,8m up to 3m max	from 1.3m up to 3.5m max
DETECTION MODES	Movement	Presence and movement	Presence and movement	Presence	Presence
SUPPLY VOLTAGE	12-24 Vcc +/-10%	12-24Vcc +/-10%	12-24 Vca +/-10% 12-24 Vcc +/-10%	12-24 Vca +/-10% 12-24 Vcc +/-10%	12-24 Vca/cc +/-10%
CONSUMPTION	‹2W (24V)	‹3W (a 24V)	1,45 W (a 24 V)	‹3W (a 24 V)	‹ 1 W (a 24 V)
TEMPERATURE RANGE	-20°C+55°C	-25°C +55°C	-20°C +60°C	-25°C +55°C	-25°C +55°C
DIMENSIONS (LxDxH)	80x50x60	260 x 44 x 55	210 x 65 x 30	210 x 65 x 30	300 x 48 x 44
CABLE	YES	YES	YES	YES	YES
EN16005	-	YES		YES	YES

INSTALLATION ACCESSORIES

EMERGENCY PUSH-BUTTON

The emergency push-button enables door opening whenever necessary. It consists of a highly-visible, red mushroom-head push-button with a twist-to-release action.

EMERGENCY PUSH-BUTTON		
	ITEM NUMBER	**DESCRIPTION**
	42282/082	PE - Red mushroom-head emergency push-button with twist-to-release actione

ELECTRIC LOCK AND MANUAL RELEASE UNITS

The electric lock has been designed specifically for locking mobile wings. It is supplied complete with a diagnostics card. The system is not electrically powered when it is in the open or closed position.

The EB2 electric lock can be fitted (on request) with mechanical release systems which is used to release the lock in the event of an operating fault, a mains power failure or a backup battery failure.

A driven external release is also available. This is mounted inside a recessed, wall-mounted, lockable box to protect against unauthorised operation.

ELECTRIC LOCK and MANUAL RELEASE UNITS		
	ITEM NUMBER	**DESCRIPTION**
	42282/076	EB2 - Electric lock for two-handed wings, controlled from by an electronic card, with 0.9 m - 1.5 m - 2.5 m, cables, installed on Nk beams with NK 250 mm profile
	42282/077	EB2 NK PREM (for Slim SNK, Wing NK, Wing NK H150) (can be ordered only with the purchase of an automation system)
	42280/084	SME - Mechanical release system for EB2 electric lock, for use in the event of faults or power supply failures
	42280/085	Box for external release drive complete with cable and shield - 5 m
	41704/002	CS - Built-in strongbox (with up/down button and electrical brake release)
	41704/004	CSP - Wall mounted outdoor strongbox

NOTE: By ticking the appropriate box on the order form, the EB2 electric lock code 42282/077, will be supplied pre-assembled and pre-mounted on the beam at the same price.

NS 48

NS 48		
	ITEM NUMBER	**DESCRIPTION**
	42282/075	NS48 (battery units are pre-assembled on all automation systems). Battery unit with double function (charging and diagnostic functions built into the door control device): 1) Electrical emergency opening device 2) Backup battery (autonomy of 1 hour, half-charged)

INSTALLATION ACCESSORIES

OPTIONAL ACCESSORIES FOR BEAMS AND COVERS

OPTIONAL ACCESSORIES FOR BEAMS AND COVERS		
	ITEM NUMBER	**DESCRIPTION**
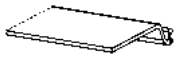	**42910/008**	Telescopic cover* with natural finish L=7,000 mm
	42910/010	Telescopic cover* with black finish L=7,000 mm
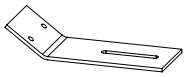	**42280/067**	Cover fixing bracket, in pack of 10 pcs
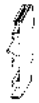	**42910/003**	Rear profile* with natural finish L=7,000 mm
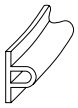	**42280/061**	Sound-proofing seal for rear profile (1 m pack)

* All profiles are supplied in lengths of 7 m which cannot be split.

ACCESSORIES FOR WINGS WITH ALUMINIUM PROFILES

Floor guides for mobile wings.

ACCESSORIES FOR WINGS WITH ALUMINIUM PROFILES		
	ITEM NUMBER	**DESCRIPTION**
	42200/050	SPS - Floor guide set for wing with Small profile frame (Can be used with other types of aluminium profile)
	42201/051	SPT - Floor guide set for wing with Modular profile frame (Can be used with other types of aluminium profile)

INSTALLATION ACCESSORIES

Details used exclusively for assembly of mobile glass-only wings (not framed with aluminium profiles).
The new system cuts assembly work to the minimum and facilitates working with glass panels.

ACCESSORIES FOR GLASS WINGS

	ITEM NUMBER	DESCRIPTION
	42281/061	PCR - Clamps for glass doors, 3 m raw profile, For 10 mm tempered glass, max. weight 80 kg and max. wing width 1,500 mm
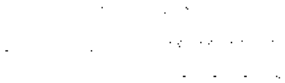	**42281/062**	Set of fixing accessories for glass wings
	42281/063	Additional reinforcement bracket (no. 1 pc) 1 pcs for wing length 900/1200 mm 2 pcs for wing length 1200/1900 mm
	42281/064	Plug for glass door clamp (no. 1 pc)
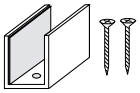	**42280/079**	GTC - Floor guide set for glass wings

UNIVERSAL ACCESSORIES FOR OTHER TYPES OF WINGS

Useful accessories for rapidly fixing new or existing mobile wings to the carriages of APRIMATIC automatic doors.

ACCESSORIES FOR WINGS WITH ALUMINIUM PROFILES

	ITEM NUMBER	DESCRIPTION
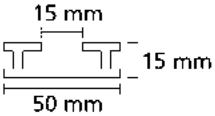	**42280/077**	PDA - Aluminium adapter profile (L=1500 mm) for one wing, for joining the carriages to the framed wing, connection plates required.
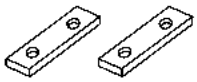	**42280/071**	CPA - Set of 2 connection plates for one wing, with fixing screws
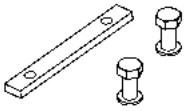	**42200/052**	Set of fixing screws for a small wing, contains all necessary screws and fittings to fix the door wing to the automation system carriage

SLIDING OPENINGS

EXAMPLES OF POSSIBLE CONFIGURATIONS

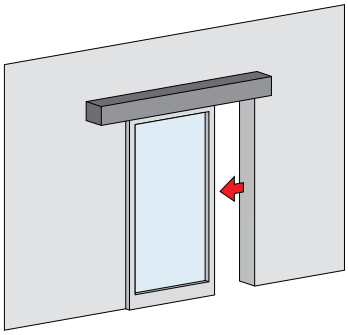

ONE SLIDING WING

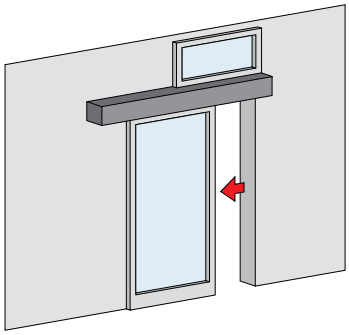

ONE SLIDING WING
WITH TRANSOM

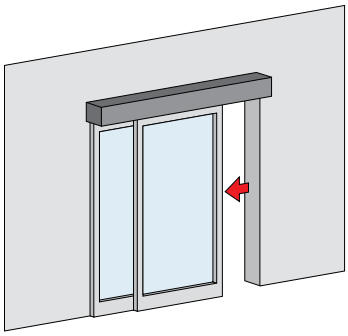

TWO WINGS
ONE SLIDING AND ONE FIXED

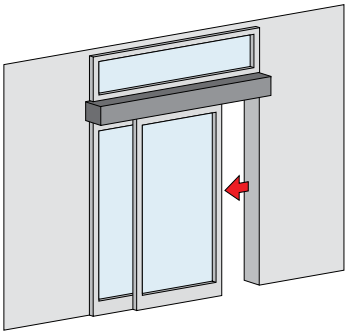

TWO WINGS
ONE SLIDING AND ONE FIXED
WITH TRANSOM

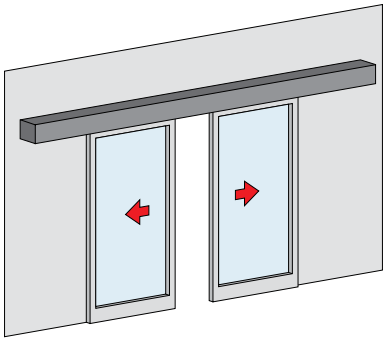

TWO SLIDING WINGS

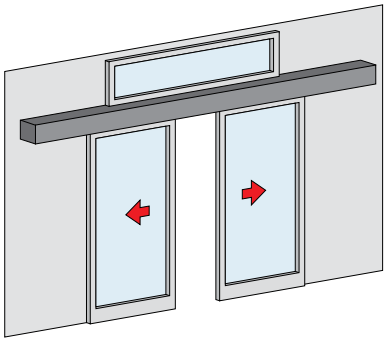

TWO SLIDING WINGS
WITH TRANSOM

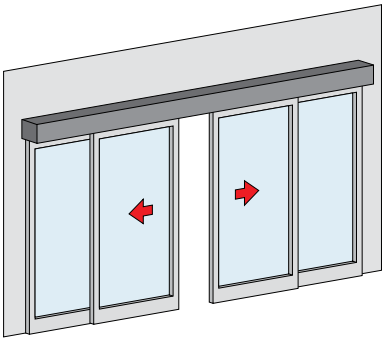

TWO SLIDING WINGS
TWO FIXED

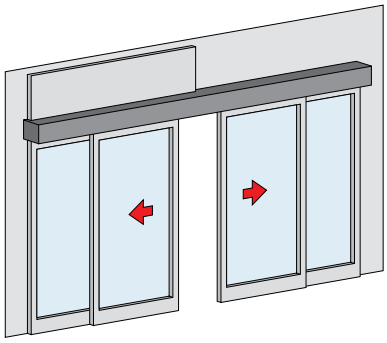

TWO SLIDING WINGS
TWO FIXED WITH TRANSOM

SLIDING OPENINGS WITH EMERGENCY OPENING DEVICE

EXAMPLES OF POSSIBLE CONFIGURATIONS

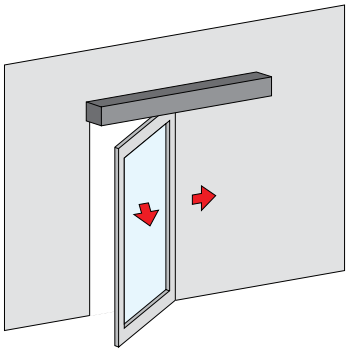

ONE SLIDING WING
WITH EMERGENCY OPENING
DEVICE ON A MOBILE WING

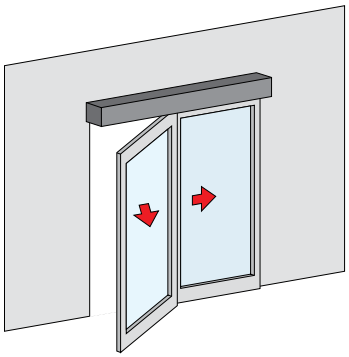

ONE SLIDING WING
ONE FIXED WITH EMERGENCY
DEVICE ON A MOBILE WING

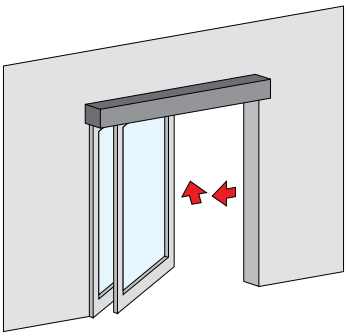

ONE SLIDING WING
ONE FIXED WITH FULL EMERGENCY
OPENING DEVICE

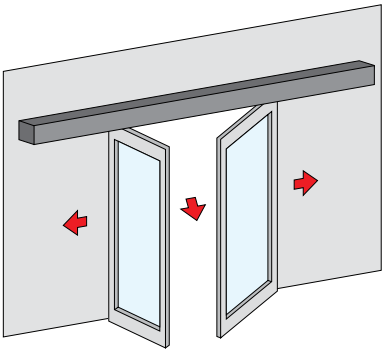

TWO SLIDING WINGS
WITH EMERGENCY OPENING DEVICE
ON MOBILE WINGS

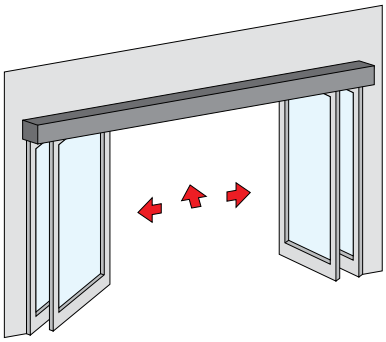

TWO SLIDING WINGS
TWO FIXED WINGS WITH FULL
EMERGENCY OPENING DEVICE

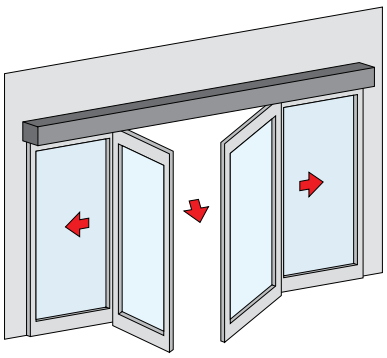

TWO SLIDING WINGS
TWO FIXED WINGS
WITH EMERGENCY OPENING DEVICE
ON MOBILE WINGS

EMERGENCY BREAK-OUT OPENING DEVICE

ASM-N MECHANICAL EMERGENCY BREAK-OUT OPENING DEVICE, FULL AND PARTIAL

LAYOUT
The emergency break-out opening device

is a safety device enabling mobile and semi-fixed wings of all types to be opened mechanically in the event of an emergency.

PARTIAL EMERGENCY OPENING DEVICE

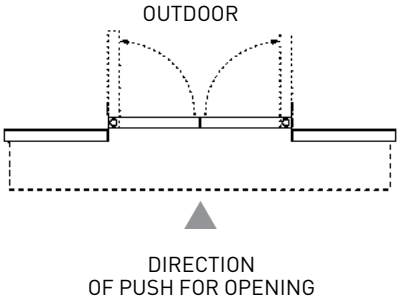

FULL EMERGENCY OPENING DEVICE

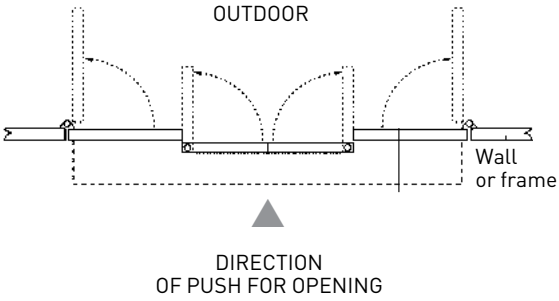

WARNING: In configurations where mobile wings equipped with ASM-N are joined to semi-fixed wings also equipped with emergency opening devices (full emergency opening device), it is necessary to fix the wings using the fittings supplied in the special set (optional).

NEWS: The spinning point for mobile wings and semi-fixed wings is located inside the profile. The set of fittings for semi-fixed wings are not visible and located inside the covering profile.

The ASM-N mechanical emergency break-out opening device can be used on wings with a maximum width of 1,200 mm and max. weight of 90 kg; and on wings with a minimal width of 700 mm and max. weight of 120 kg (according to the table below) for a max. height of 2,400 mm.

Wing length mm Max. wing weight* kg	900 120	1,000 110	1,200 100	90
ASM-N weight	7 kg			

*Overall weight including ASM-N

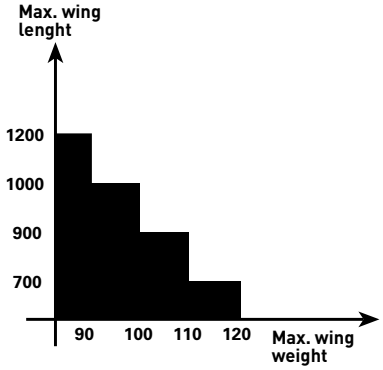

THE ASM-N CAN BE USED WITH THE FOLLOWING TYPES OF PROFILES:

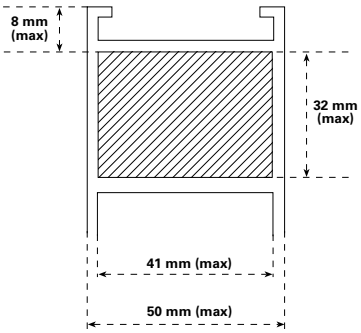

PROFILES COMPATIBLE WITH ASM-N (NOT TYPE-APPROVED)	- Domalstopper PG - Formula F40 system - Metra NC 45 International - Metra NC 55 International - R50 - Modular APRIMATIC profiles*

* For instructions on machining "Modular" profiles, request the cutting list.

If you cannot use the compatible profiles listed above, ensure that the profiles you use have the dimensions indicated above.

EMERGENCY BREAK-OUT OPENING DEVICE

ASM-N EMERGENCY OPENING DEVICE

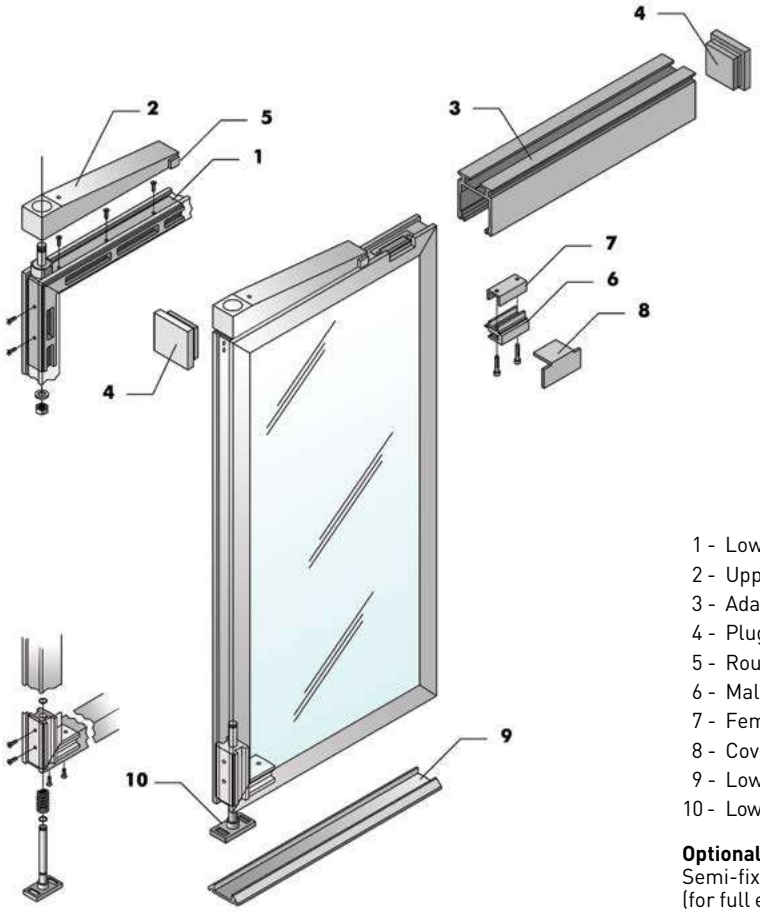

1 - Lower arm
2 - Upper arm
3 - Adapter profile
4 - Plugs for adapter profile
5 - Rough adjustment insert
6 - Male fitting
7 - Female fitting
8 - Cover plate
9 - Lower guide
10 - Lower guide slider Nuts, bolts and screws

Optional elements:
Semi-fixed wing fitting set
(for full emergency opening device)

MECHANICAL EMERGENCY BREAK-OUT OPENING DEVICE

MECHANICAL EMERGENCY BREAK-OUT OPENING DEVICE	
ITEM NUMBER	**DESCRIPTION**
42280/088	(*) Mechanical emergency opening device set for 1 mobile wing, device weight 7 kg
42280/081	(*) Guide (L=1,500 mm) and adapter (L=1,200 mm) set
42280/070	Set of fittings for 1 semi-fixed wing

NOTE: You should include the weight of the emergency opening device when calculating the wing weight.Max. wing weight = 90 kg for a length of 1,200 mm, including the emergency opener system (7 kg). (*) Both required for installation.

ACCESSORIES FOR MECHANICAL EMERGENCY BREAK-OUT OPENING DEVICE

ACCESSORIES USED TO STOP WING MOVEMENT IN THE EVENT OF EMERGENCY OPENING

OPTIONAL ACCESSORIES	
ITEM NUMBER	**DESCRIPTION**
42280/076	SMI - Magnetic lock sensor, recess mounted, to be connected as an N.C. contact in series with the reset button, on full emergency break-out opening devices, to be fitted on all semi-fixed wings
42300/007	ER6/N

NOTE: For technical details about the ER6N photocells, see the "Photocells" table (on "Control and safety devices" page).

SMALL PROFILES

PROFILES FOR AUTOMATIC DOORS SUITABLE FOR 10/11 MM TICK GLASS PANELS

"SMALL" series profiles
can be used to make wings
for automatic sliding doors.This profile has been designed and manufactured specifically for mobile wings, fixed side wings and semi-fixed side wings.
In spite of its compact size, the profile is compatible with up to 10 mm thick glass panels.

EXAMPLE OF ONE OF THE POSSIBLE CONFIGURATIONS

FIXED WING

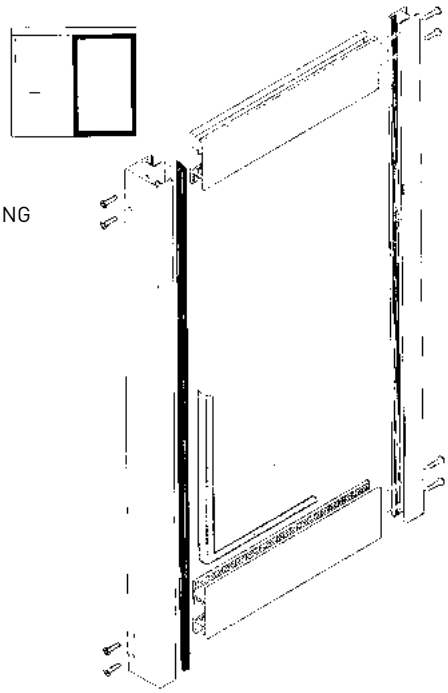

MOBILE WING

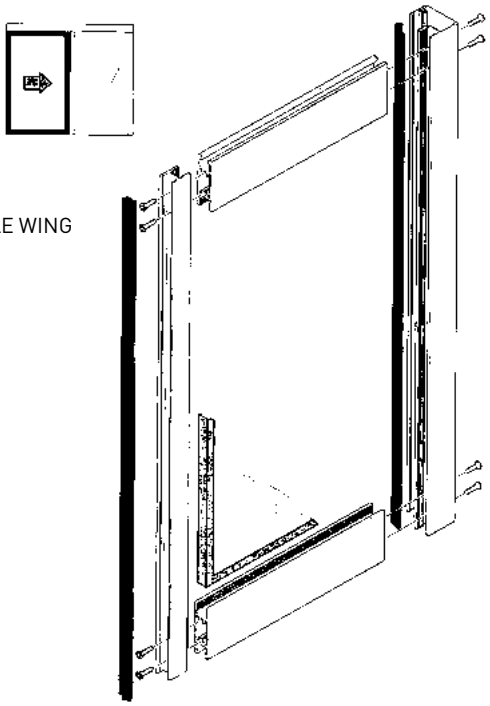

"SMALL" SERIES PROFILES

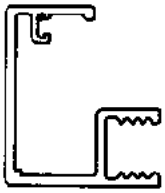

Fixed/mobile wing upright

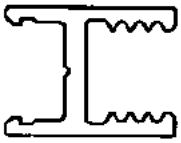

Central upright

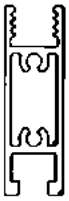

Top and bottom rail

Single wing stop

Central seal

Draught-proof seal
for overlap area

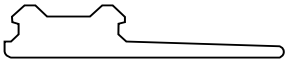

Side seal

"SMALL" SERIES PROFILES		
	ITEM NUMBER	**DESCRIPTION**
	42200/012	"Small" mobile/fixed wing upright (srm)
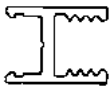	**42200/013**	"Small" central upright (L = 5050 mm)
	42200/014	"Small" top and bottom rail (L = 5050 mm)
	42200/015	"Small" single wing stop (L = 5050 mm)

NOTE: All aluminium profiles are supplied non-anodised in lengths of 5050 mm.

"SMALL" SERIES PROFILES

SEALS

	ITEM NUMBER	DESCRIPTION
	42200/016	"Small" central seal (pack of 100 m)
	42281/060	Draught-proof seal for overlap area (pack of 1 m)
	42200/054	"Small" side seal (pack of 80 m)

NOTE: All seals necessary for wing assembly can be purchased to size in multiples of 1 metre.
This does not apply to adhesive seals; which are sold exclusively in packs of 50 metres.

FITTING ACCESSORIES

	ITEM NUMBER	DESCRIPTION
	42200/053	Set of fixing screws for a small wing, required for assembly of automatic door wing profiles
	42200/051	Pack of inserts for assembling a fixed wing with "Small" profile

NOTE: For the fittings required to secure the mobile wing to the carriage and for the floor guide to be used with Small profiles,
see the catalogue on page 194-195 (SPM and "Set of fixing screws for a small wing").

MODULAR PROFILES

IDEAL INSTALLATION
4 wing door, with 2 fixed and 2 sliding

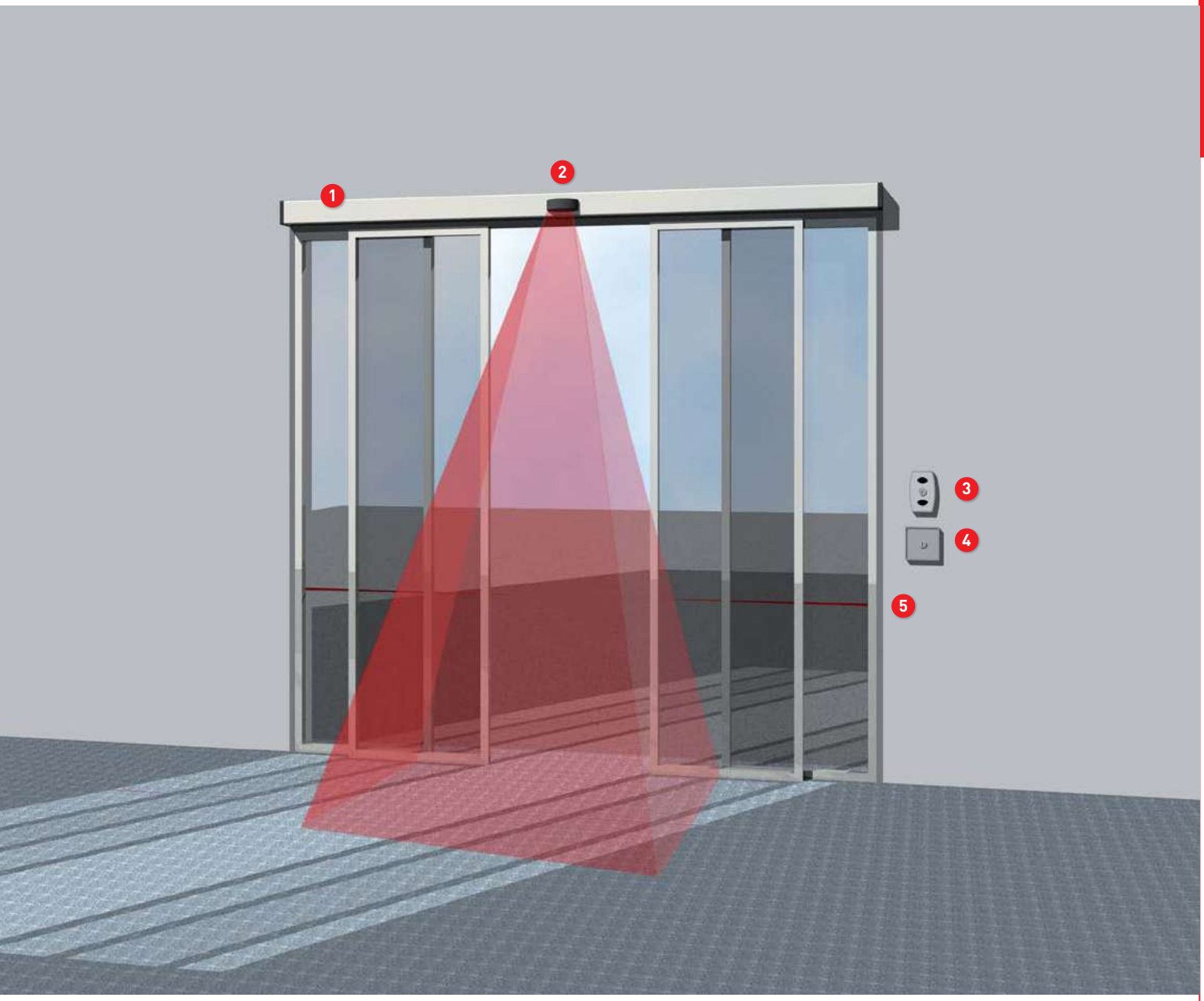

KEY

1. Automation module
2. Radar
3. Manual release
4. Control unit : key-operated switch / presence reader / keyboard combination lock / card reader / magnetic keys
5. Pair of photocells

MODULAR PROFILES

PROFILES FOR 9/13 mm AND 20/23 mm automatic doors

"MODULAR" profiles can be used for automatic sliding door wings. This profile has been specifically designed for the construction of fixed and mobile wings with or without mechanical emergency break-out opening device (AMS) thus perfectly fitting in a system of windows and curtain walls providing a complete range of possible solutions.
The profile's modular construction, lends the wing a striking and aesthetically pleasing look. "MODULAR" profiles complete the range of extruded wing elements and meet any installation requirements.

SEALS

	ITEM NUMBER	DESCRIPTION
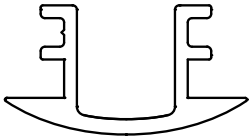	**42205/001**	Upright cover (L = 5050 mm)
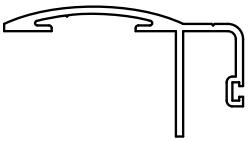	**42205/002**	Wing mounting profile without fixed slide guide (L = 5050 mm)
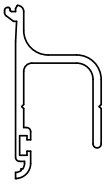	**42205/003**	Mobile wing mounting profile + fixed slide guide (L = 5050 mm)
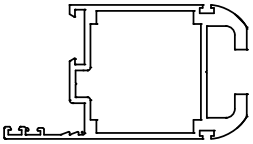	**42205/004**	Upright profile (L = 5050 mm)

SEALS

	ITEM NUMBER	DESCRIPTION
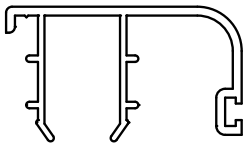	**42205/005**	Photoelectric cell profile (L = 5050 mm)
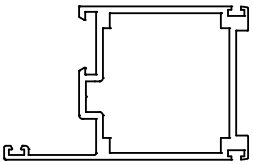	**42205/006**	Upper frame (L = 5050 mm)
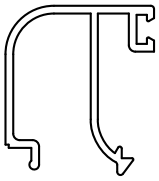	**42205/007**	Snap-type rounded glass beading (L 23) (L = 6500 mm)
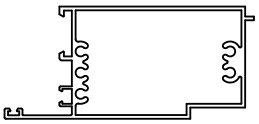	**42205/008**	Lower additional transom (L = 6500 mm)

MODULAR PROFILES

PROFILES FOR 9/13 mm AND 20/23 mm automatic doors

SEALS

	ITEM NUMBER	DESCRIPTION
	42205/009	Horizontal 160 mm transom (L = 6500 mm)
	42205/010	Lower transom 160 mm (L = 6500 mm)
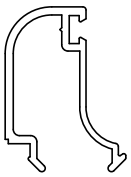	**42205/011**	Snap-type rounded glass beading (L13) (L = 6500 mm)
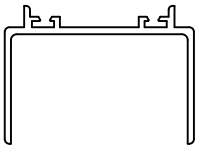	**42205/012**	Vertical wall-mounted compensator (L = 6500 mm)
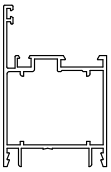	**42205/015**	"L" oversized fixed frame (L = 6500 mm)
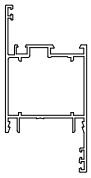	**42205/016**	"R" oversized fixed frame (L = 6500 mm)

SEALS

	ITEM NUMBER	DESCRIPTION
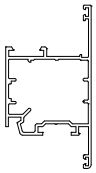	**42205/017**	Outward-opening oversized wing (L = 6500 mm)
	42205/019	Blind glass beading (L = 6500 mm)
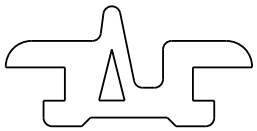	**42205/061**	Central seal (100 m)
	42205/062	8mm glass external pressure gasket (in pack 250m)
	42205/063	8mm glass internal pressure gasket (in pack 90m)
	42201/050	Set of brackets for Modular profiles (8pcs)

OVER/ OVER HEAVY / OVER EVO-N

NEW 24 Vcc i233 i234

Automation for indoor swing doors, of max. weight 300kg. Continuous use.

TECHNICAL DATA	OVER	OVERHEAVY	OVER EVO-N
POWER SUPPLY	100/240 V - 50/60 Hz		
MOTOR POWER SUPPLY	24 V		
ACCESSORY POWER SUPPLY	12 V cc - 1A max.		
THRUST FORCE	20 Nm	40 Nm	40 Nm
MAX WEIGHT APPLICABLE TO THE WING	200 kg	300 kg	300 kg
ABSORBED POWER	40 W	70 W	70 W
MAX.WING WIDTH	L=1200 mm	L=1500 mm	L=1200 mm
USE FREQUENCY	S3 = 100% - continuous		
OPENING ANGLE	100° max.		
OBSTACLE DETECTION	YES adjustable		
MAX. SPEED OPENING	2-6 s		
OPERATING TEMPERATURE	- 15° C / + 50° C		
EMERGENCY BATTERY	YES optional		
PROTECTION DEGREE	IP20		
CERTIFIED	EN16005		

OVER series, is equipped with encoder, a device through which you can control and manage with the utmost precision the engine and the port status in any use condition.

Maximum safety is guaranteed by OVER's many functions. The OBSTACLE DETECTION function, available thanks to the encoder, stops the door and/or reverses the wing movement direction when an obstacle is detected.

EMERGENCY opening mode, in case of a power failure, which allows the automation system to place the door in the OPEN position and STOP condition or, at the discretion of the user, allows the continuous operation of the door thanks to the optional backup battery.

The PUSH&GO function enables OVER to recognise when the door is being pushed by hand and therefore allow door opening.

OVER and OVER HEAVY are available with opening and closing to motor; while OVER EVO-N with opening at motor and closing with spring, guarantee a safety closing also in blackout situation.

New technology brushless motor for greater durability, reducing the frequency of maintenance.

ARTICULATED ARM

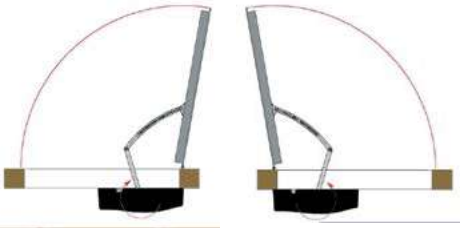

Use the ARTICULATED ARM for door opening outwards from the automation side.

SLIDING ARM

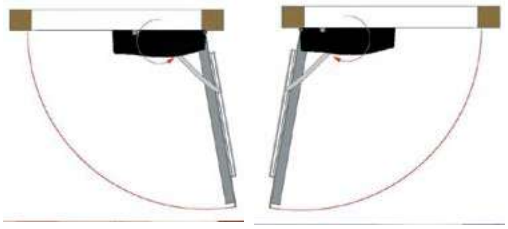

Use the SLIDING ARM for doors opening inwards from the automation side.

DRIVE SYSTEM FOR INDOOR SWING DOORS	
ITEM NUMBER	**DESCRIPTION**
42605/001	OVER (grey cover)
42605/002	OVER HEAVY (grey cover)
42605/004	OVER EVO-N (grey cover)

COMPULSORY CONTROL ACCESSORIES	
ITEM NUMBER	**DESCRIPTION**
42605/050	Articulated arm : for use with doors opening outward
42605/051	Sliding arm : for use with doors opening inwards
42605/080	Articulated arm only for model OVER EVO-N : for use with doors opening outward
42605/081	Sliding arm only for model OVER EVO-N: for use with doors opening inwards
42605/082	Spacer 66mm (only for model OVER EVO-N)
42605/056	Spacer 17mm (only for OVER model)
42605/057	Spacer 51mm
42605/058	Spacer 68 mm
42605/059	Spacer 85mm

ACCESSORIES	
ITEM NUMBER	**DESCRIPTION**
41923/011	RR-SE-E - Unico 433.92 MHz Memory System superheterodyne receiver
42605/070	Batteries group for OVER
42605/071	Batteries group for OVER Heavy
42605/084	Batteries group for OVER EVO-N (installation outside the automation)
	RADAR:
42282/096	RSH - Swing door safety sensor (active infrared distance measurement technology
42283/094	RI-3H Active infrared radar
42605/062	TOUCH T6 Function selector
42605/061	SEL F 3 position selector

NOTE: for other control and safety devices, see page 192.

SEL F 3 POSITION SELECTOR

Select basic door operating modes.

TOUCH T6

Select door operating modes.
Parameters configuration.

TECHNICAL INFO

R251 FM
R251 FE
AP350
TWENTY 270
FORTY 270 - 390
EM73N
ZT70
ZT71
ONDA624
ONDA623
ONDA800E / ONDA801E
AT80E
ONDA 2000 / 2001
AT88T
AT 90T / AT92 T
ALZO
AT50
MATIC-BOX800 / MATIC-BOX 1200
HARRIER E40 / E60
HARRIER LUX40 / LUX60
BUONGIORNO
O2M
APRICOLOR VARIA S / VARIA ST
ST450N
APRILINEARE
DUO SYSTEM
APRICOP
OVER / OVER HEAVY / OVER EVO-N

R251 FM

p14 p34

OPERATOR DIMENSIONS

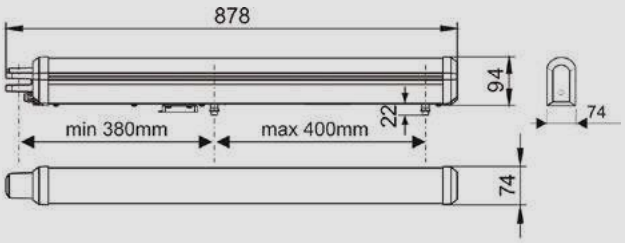

Tthe max stroke reduces by 16mm with one limit switch and by 32mm with two limit switches

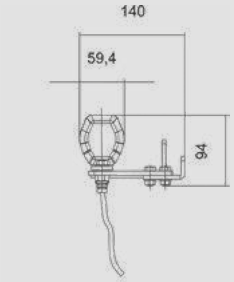

OPERATOR POSITIONING

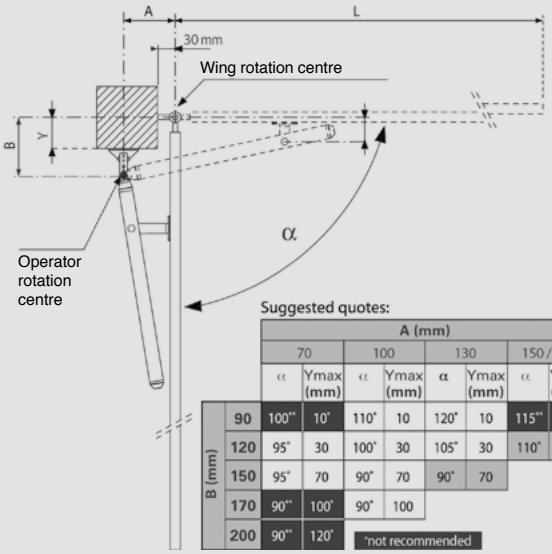

Suggested quotes:

B (mm)	A (mm) 70 α	70 Ymax (mm)	100 α	100 Ymax (mm)	130 α	130 Ymax (mm)	150 / 190 α	150 / 190 Ymax (mm)
90	100**	10°	110°	10	120°	10	115**	10°
120	95°	30	100°	30	105°	30	110°	30
150	95°	70	90°	70	90°	70		
170	90**	100°	90°	100				
200	90**	120°						

*not recommended

R251 FE

p15 p36

OPERATOR DIMENSIONS

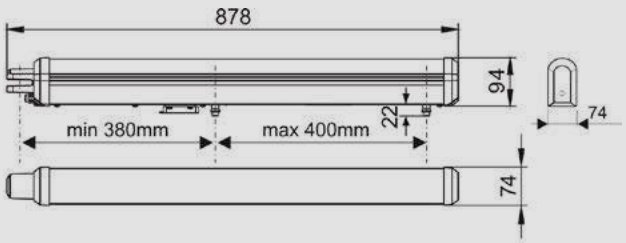

OPERATOR POSITIONING

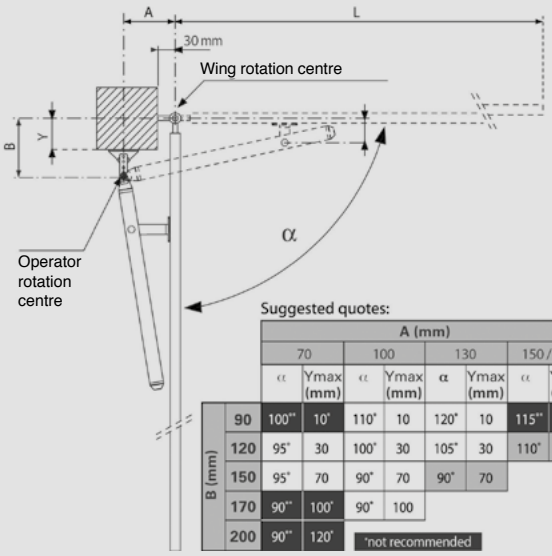

Suggested quotes:

B (mm)	A (mm) 70 α	70 Ymax (mm)	100 α	100 Ymax (mm)	130 α	130 Ymax (mm)	150 / 190 α	150 / 190 Ymax (mm)
90	100**	10°	110°	10	120°	10	115**	10°
120	95°	30	100°	30	105°	30	110°	30
150	95°	70	90°	70	90°	70		
170	90**	100°	90°	100				
200	90**	120°						

*not recommended

AP350

p16 p38

OPERATOR DIMENSIONS

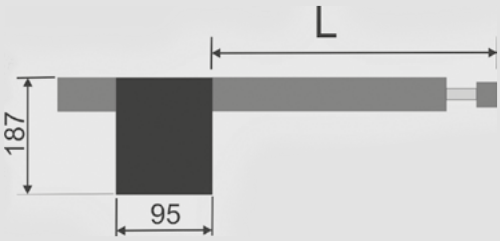

L min	L max
770 mm	1130 mm

OPERATOR POSITIONING

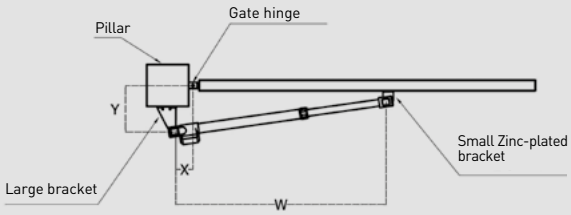

Type	95° rotation			110° rotation		
	W	X	Y	W	X	Y
400	1130	160	210	1130	170	160

TWENTY 270

p17 p40

OPERATOR DIMENSIONS

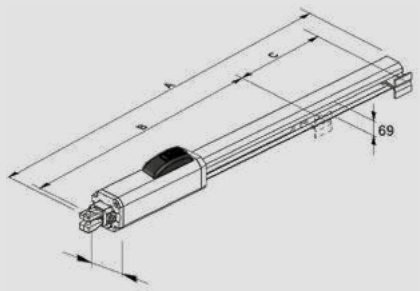

	DIMENSIONS (mm)		
Model	Length (A)	Distance attacks (B)	Rod stroke (C)
TWENTY 270	990	723	270

OPERATOR POSITIONING

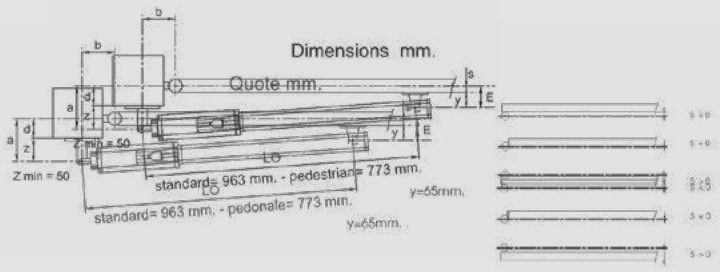

Table A: Dimensions recommended for standard operators

Opening angle	a (mm)	b (mm)	c (*) (mm)	d (**) (mm)
90°	130	140	270	90

(*) rod stroke required to stem (**) max dimensions
c= The stroke of the rod is less than the maximum stroke in order the piston internally reaching its stop in the opening and closing phases

FORTY 270 / 390

p42

OPERATOR DIMENSIONS

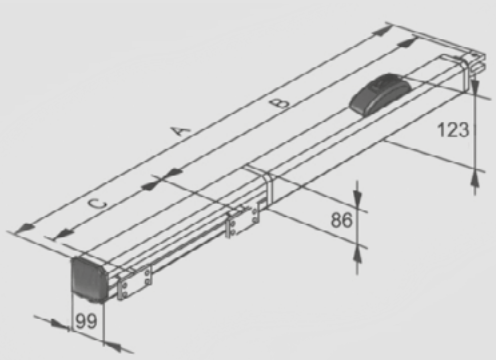

	DIMENSIONS (mm)		
Model	Length (A)	Distance attacks (B)	Rod stroke (C)
FORTY 270	1090	705	270
FORTY 390	1330	825	390

OPERATOR POSITIONING

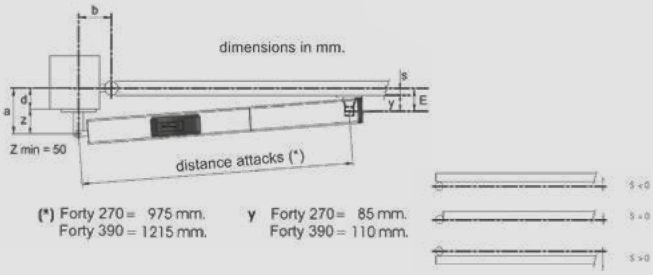

Table "A": Forty 270 - Fixing brackets

Opening angle	a (mm)	b (mm)	c (*) (mm)	d (**) (mm)	s (mm)
90°	130	130	270	80	20
115°	100	120	270	50	20
125°	90	120	270	40	0

(*) rod stroke required to stem the hydraulic slowdown in the closing
(**) max dimensions

Table "B": Forty 390 - Fixing brackets

Opening angle	a (mm)	b (mm)	c (*) (mm)	d (**) (mm)	s (mm)
90°	200	160	390	150	20
115°	170	160	390	110	20
125°	130	170	390	80	20

(*) rod stroke required to stem the hydraulic slowdown in the closing
(**) max dimensions

EM 73N

p44

OPERATOR DIMENSIONS

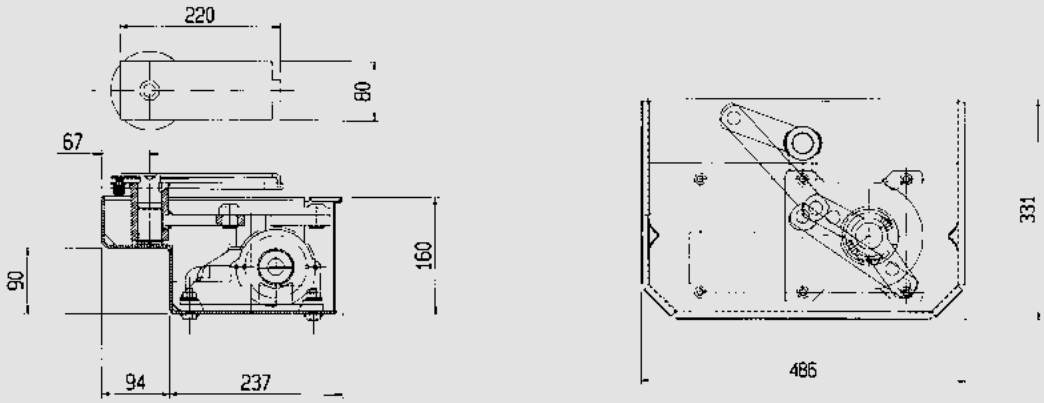

ZT 70

p46

DIMENSIONS CIA 170 (undergound box)

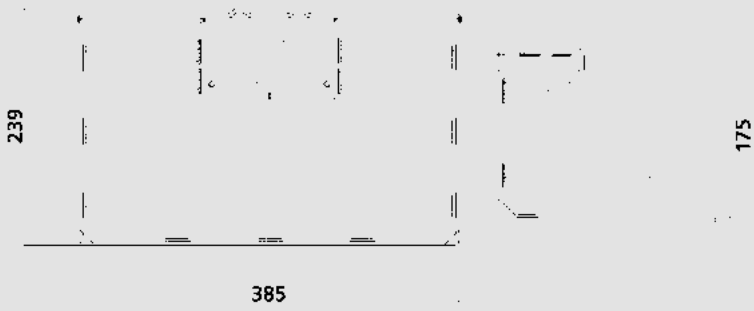

NOTE : Always include
a rainwater drain

ZT 71

p48

DIMENSIONS CIA171 (undergorund box)

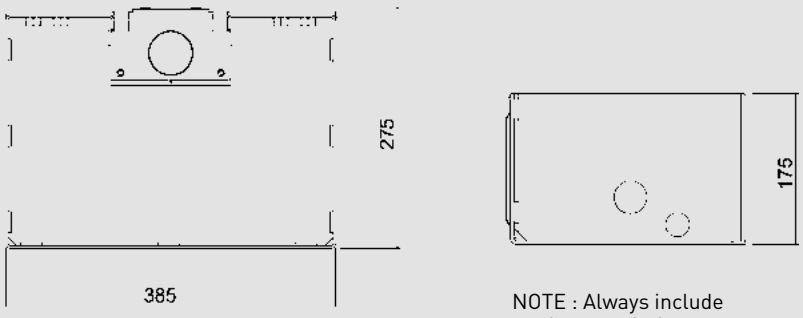

NOTE : Always include
a rainwater drain

ENCODER PER MOTORI SCORREVOLI

p60

OPERATOR DIMENSIONS

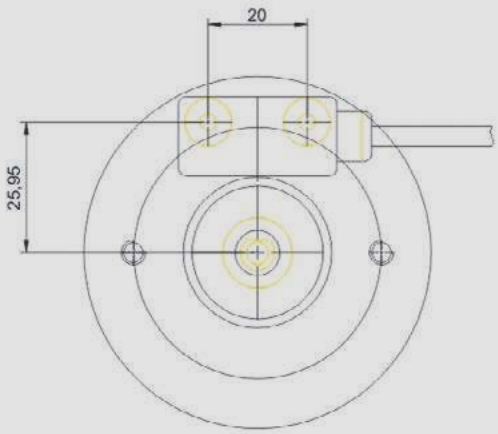

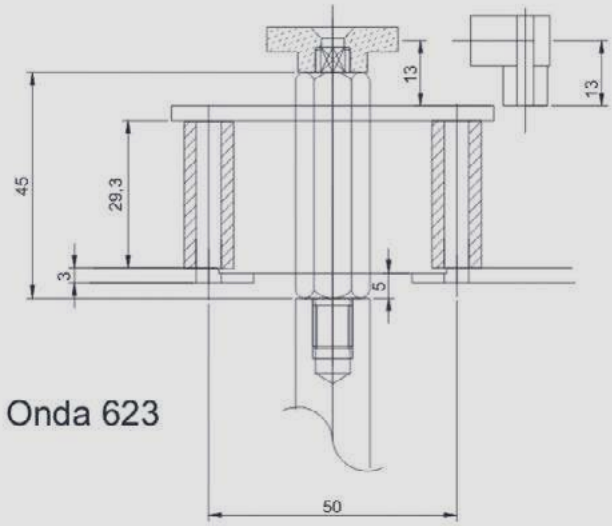

ONDA 623

P21 P60

OPERATOR DIMENSIONS

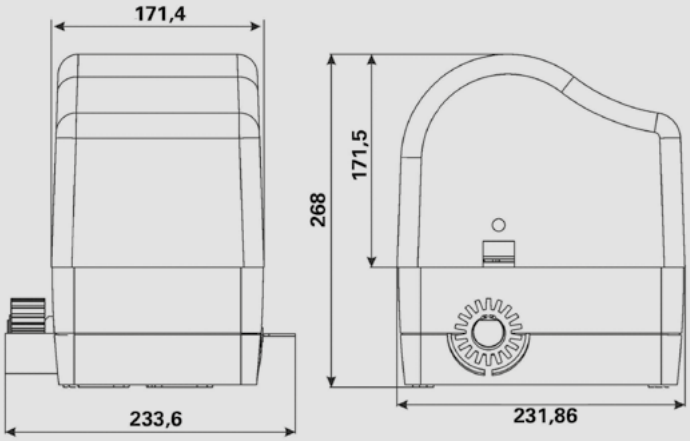

ONDA 624

P20 P58

OPERATOR DIMENSIONS

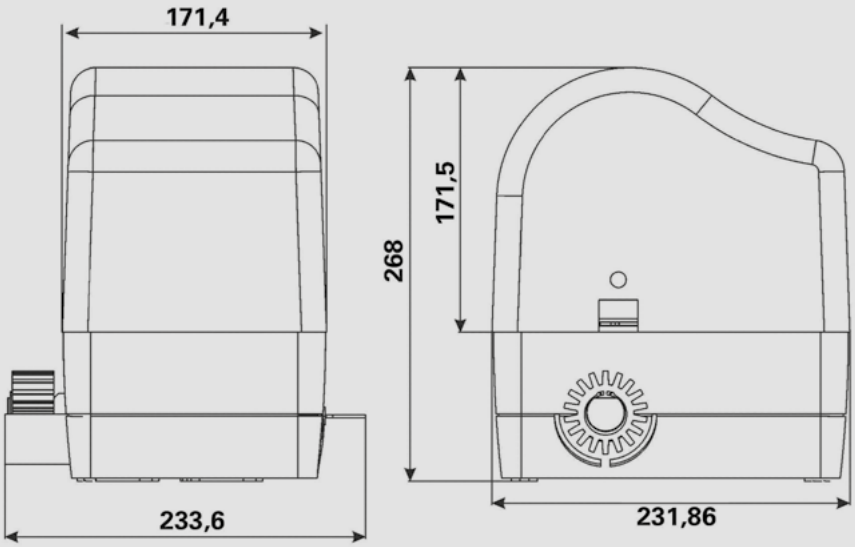

ONDA 800E / 801E

P22 P62

OPERATOR DIMENSIONS

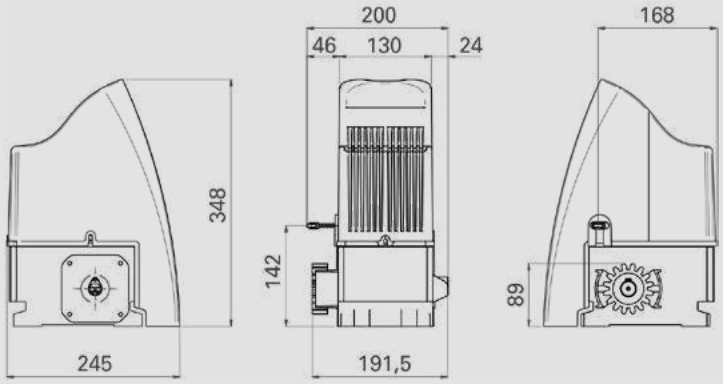

AT 80E

P64

OPERATOR DIMENSIONS

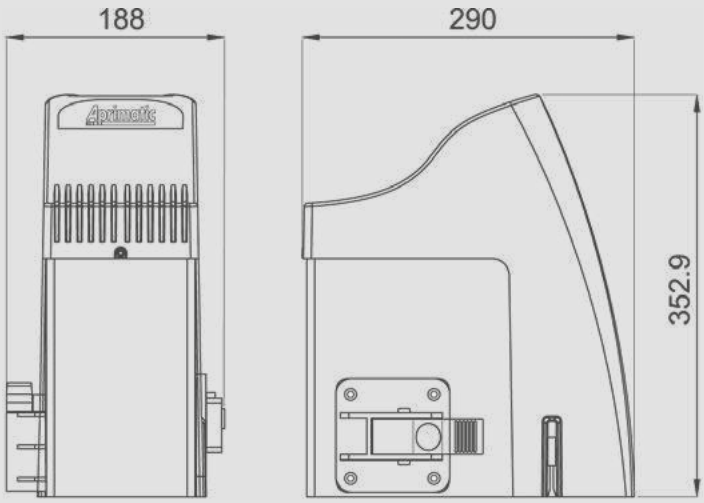

ONDA 2000 / 2001

p66

OPERATOR DIMENSIONS

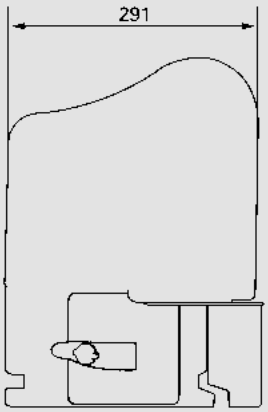

ENCODER PER MOTORI SCORREVOLI

62 p66

OPERATOR DIMENSIONS

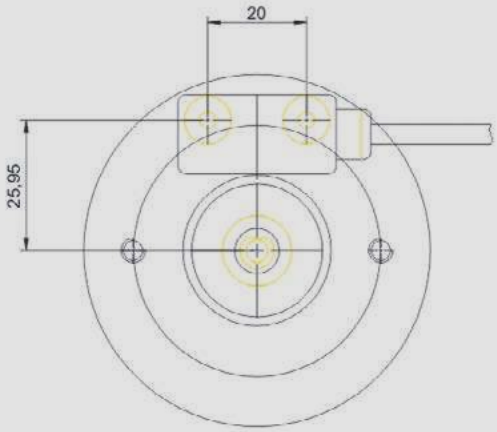

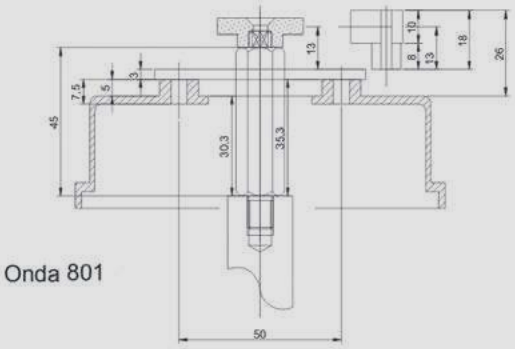

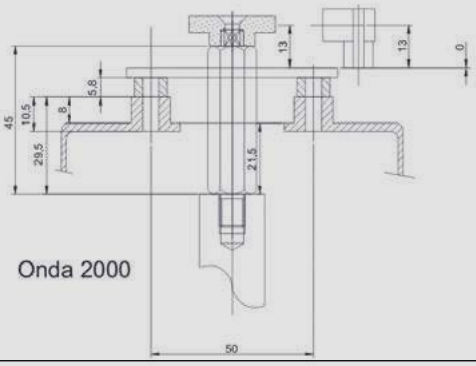

AT 88T

p68

DIMENSIONI

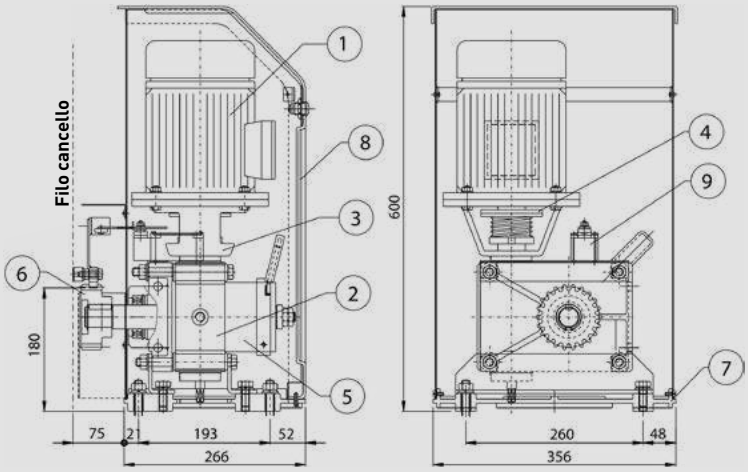

AT 88 GEAR MOTOR MAIN PRODUCT ITEMS:

1- Motor
2- Worm screw reduction unit
3- Bell type coupling
4- Single disk dry clutch
5- Release device
6- Pinion
7- Support base
8- Door
9- Mechanical limit stop

AT 90T / AT 92T

p70

DIMENSIONS

AT 90T

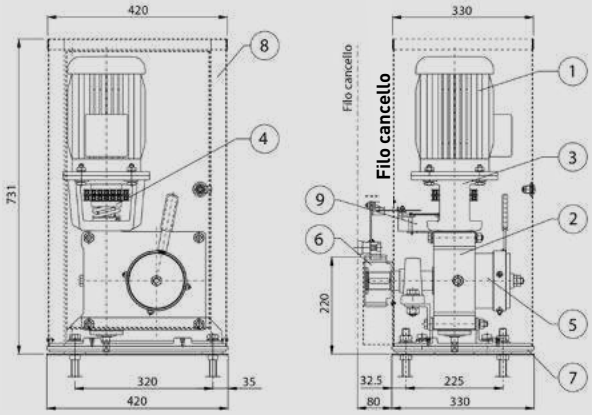

AT 92T

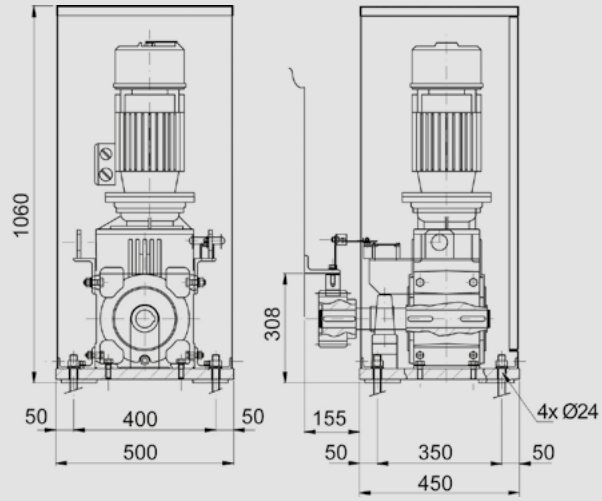

AT 90T - AT 92T GEAR MOTOR MAIN PRODUCT ITEMS:

1- Motor
2- Worm screw reduction unit
3- Bell type coupling
4- Single disk dry clutch
5- Release device
6- Pinion
7- Support base
8- Door
9- Mechanical limit stop

ALZO

p23 p78

OPERATOR DIMENSIONS

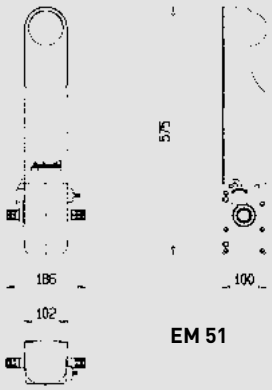

EM 51

Galvanised return pipe with pre-welded bush

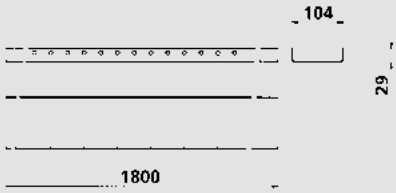

Sheet fixing bracket

AT 50

p80

DIMENSIONS

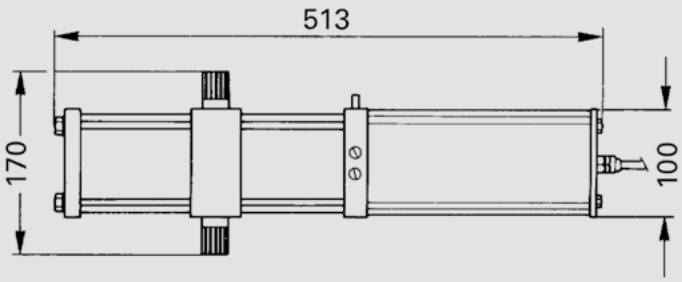

MATIC-BOX 800 / MATIC-BOX 1200

p24 p82

DIMENSIONS

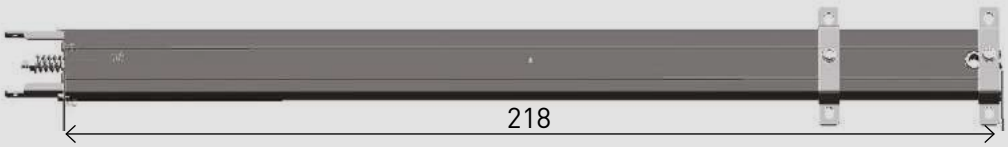

Dimensions mm		
Width	height	Depth
218	365	125

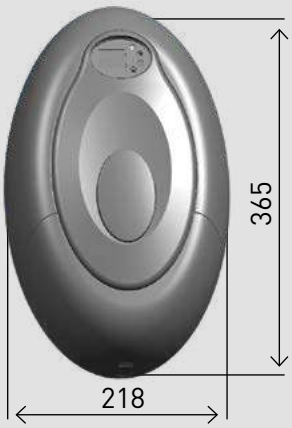

HARRIER E

p90

DIMENSIONS

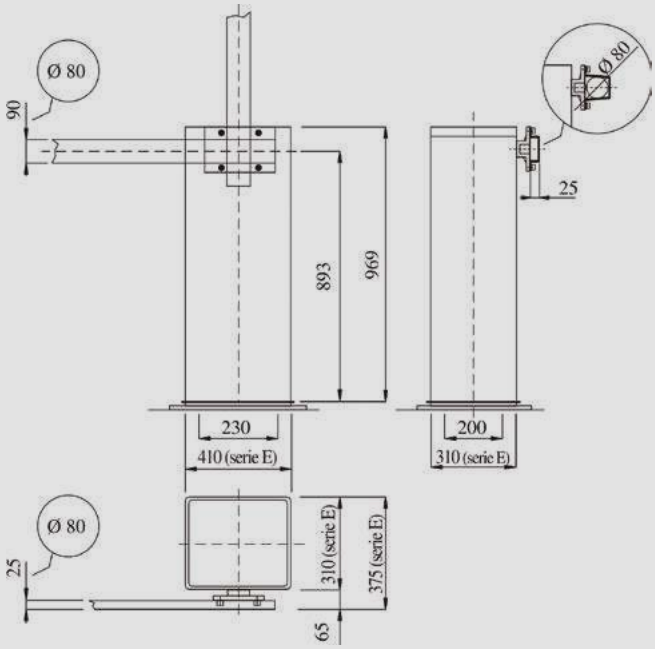

HARRIER LUX

p92

DIMENSIONS HARRIER LUX

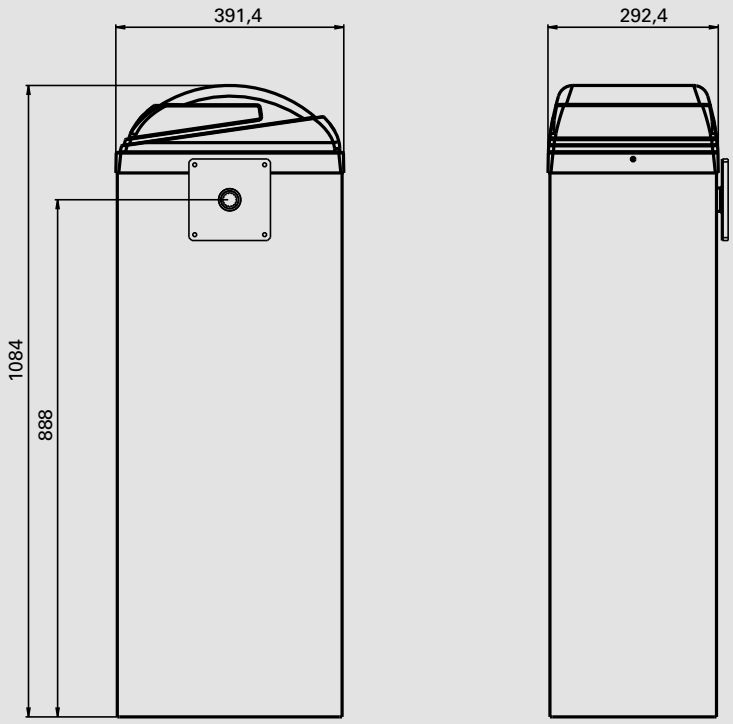

BUONGIORNO

p 140

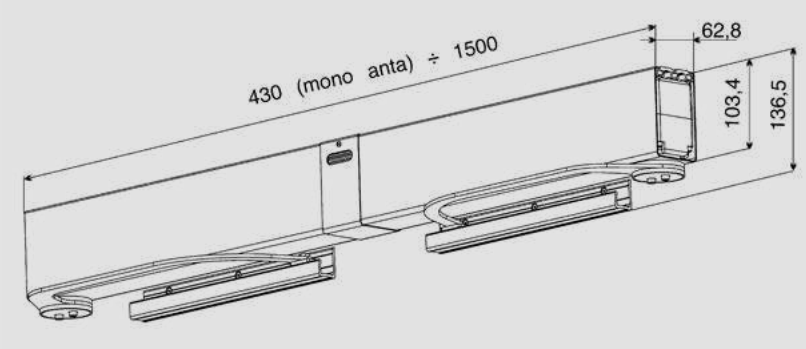

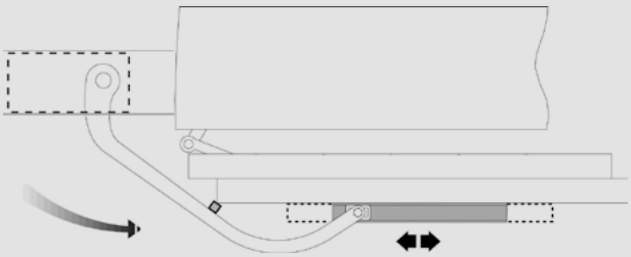

LEVERS

COMPASS LEVER R

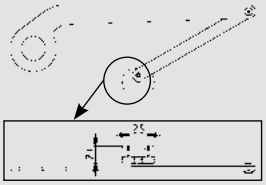

COMPASS LEVER T

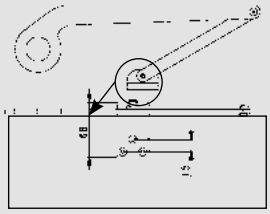

CURVED LEVER
WITH AMBIDEXTROUS GUIDE

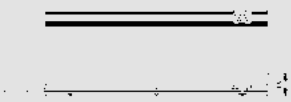

R AND T COMPASS LEVER

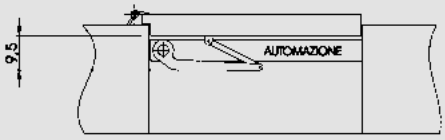

CURVED LEVER WITH AMBIDEXTROUS GUIDE

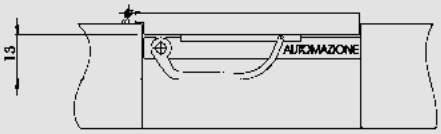

O2M

p 148

O2M OUTWARD-OPENING DIMENSIONS

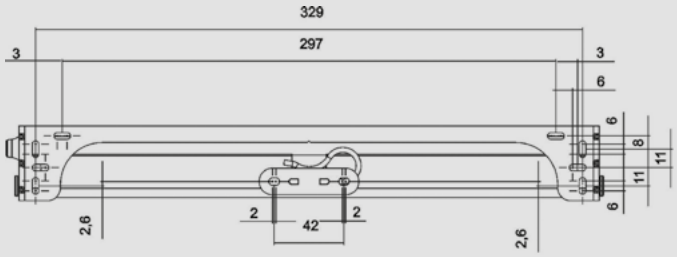

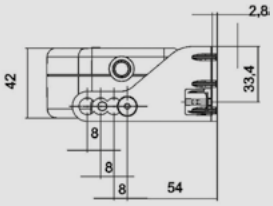

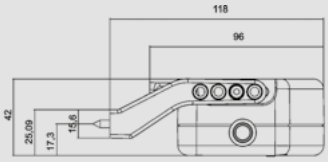

Slim side bracket for outward-opening applications.

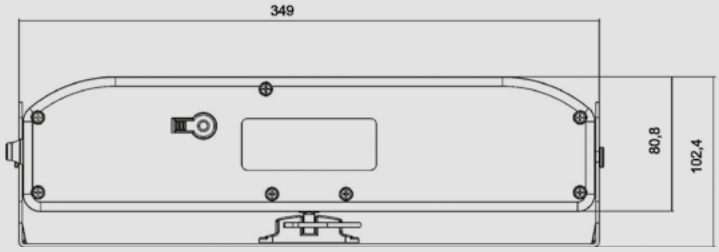

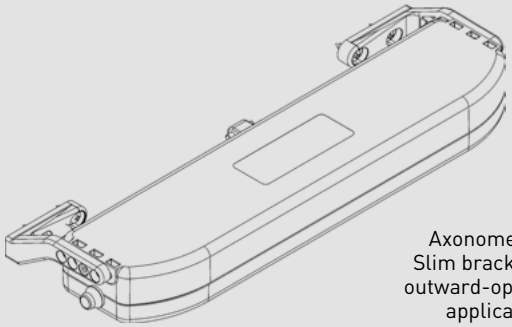

Axonometry of Slim bracket for outward-opening applications.

O2M BOTTOM-HINGED DIMENSIONS

Slim side bracket for bottom-hinged applications.

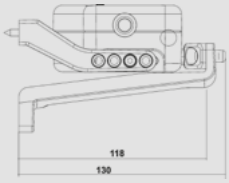

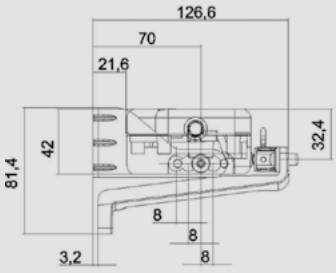

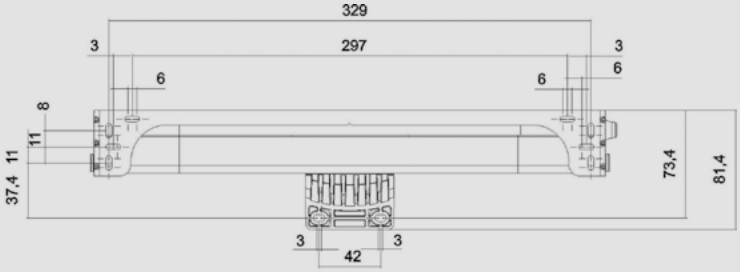

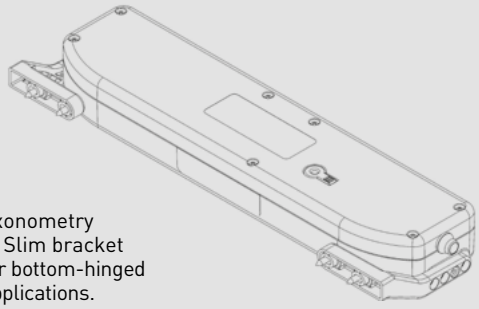

Axonometry of Slim bracket for bottom-hinged applications.

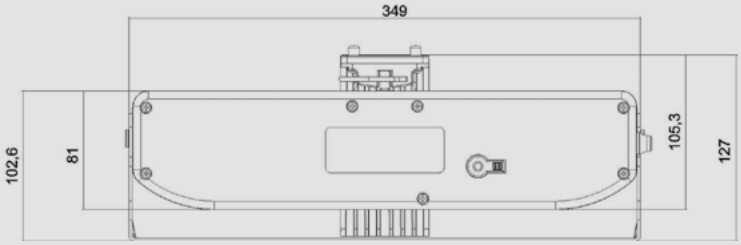

APRICOLOR VARIA / VARIA ST

p150 p152

OPERATOR DIMENSIONS

VARIA

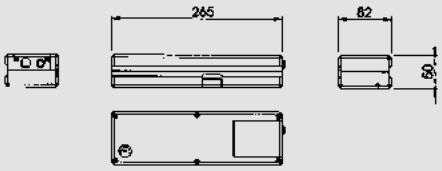

VARIA S / ST

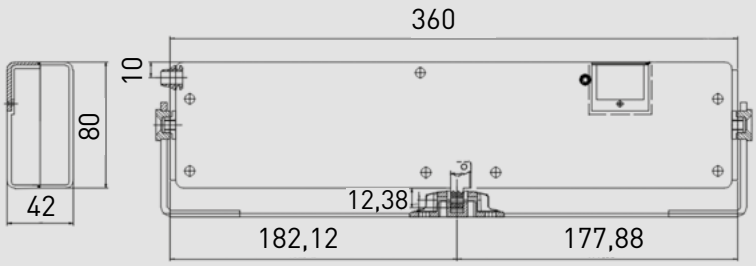

KIT FOR BOTTOM-HINGED APPLICATIONS

VARIA KIT
TRADITIONAL
FIXING SYSTEM

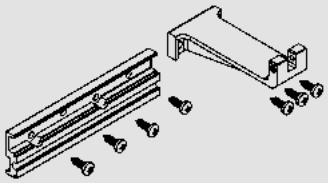

(NOT FOR MODEL VARIA S/ST)

KIT FOR OUTWARD-OPENING APPLICATIONS

VARIA KIT
TRADITIONAL
FIXING SYSTEM

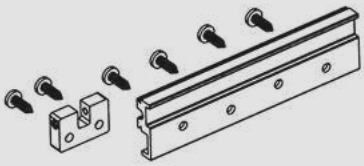

(NOT FOR MODEL VARIA S/ST)

WIMATIC

p146

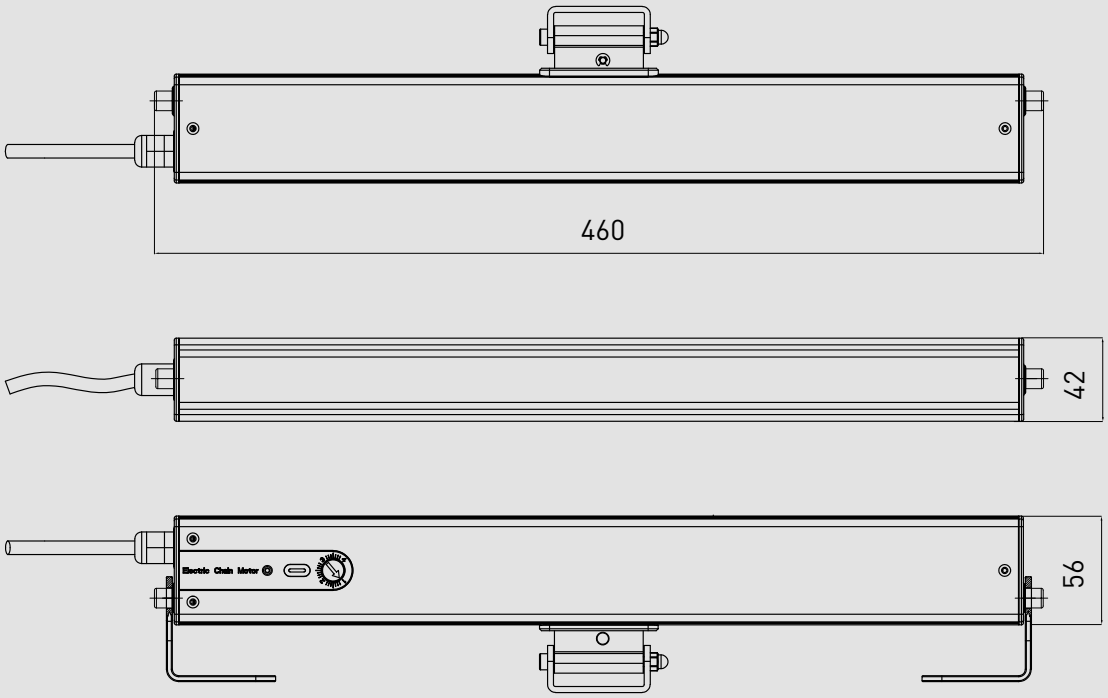

ST 450N

p 154

ST450N DIMENSIONS WITH 180MM STROKE

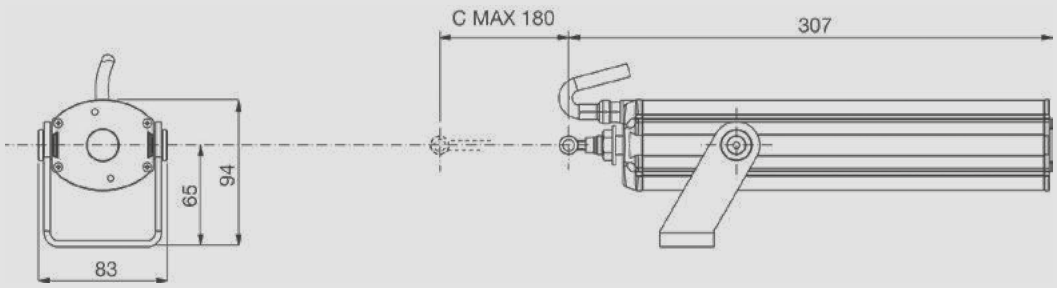

ST450N DIMENSIONS WITH 300MM STROKE

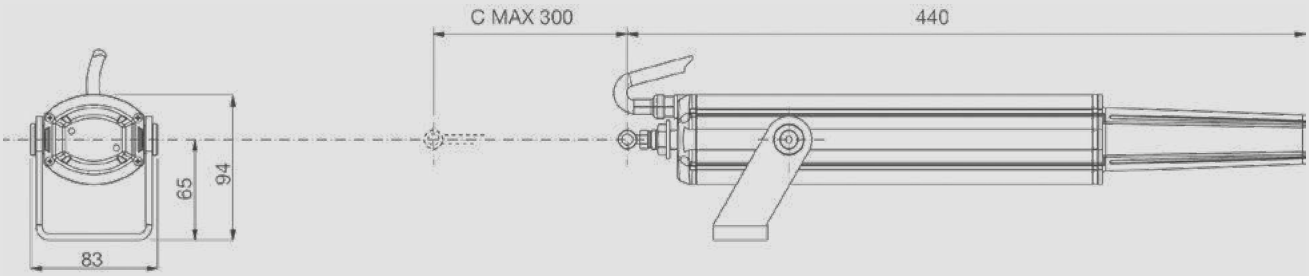

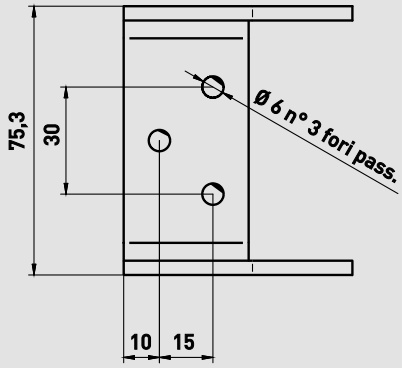

APRILINEARE

p 156

APRILINEARE DIMENSIONS

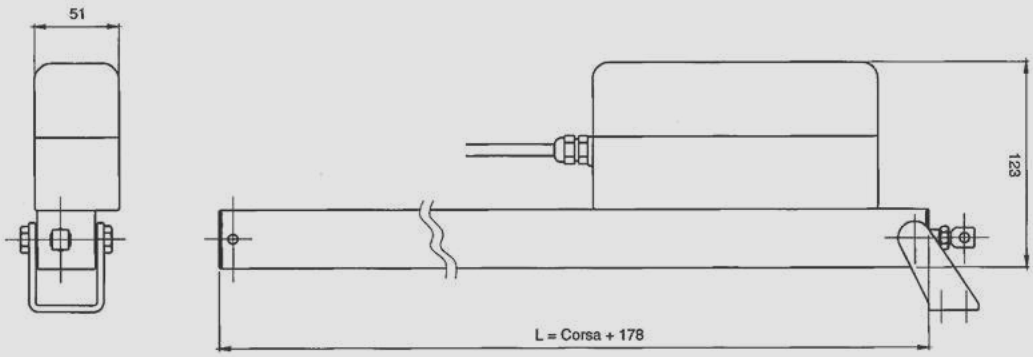

APRILINEARE DUO-TRY SYSTEM

p 156

OPERATOR DIMENSIONS

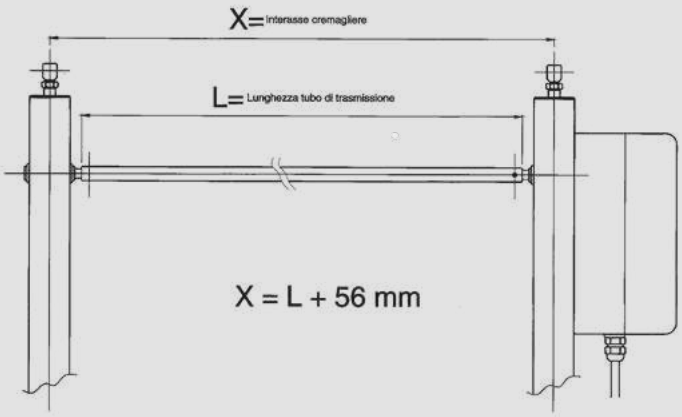

APRICOP

p 159

OPERATOR DIMENSIONS

APRICOP

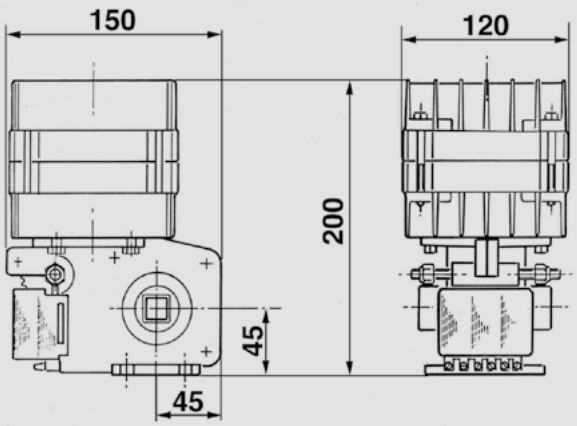

RACK FOR APRICOP

p 160

RACK DIMENSIONS

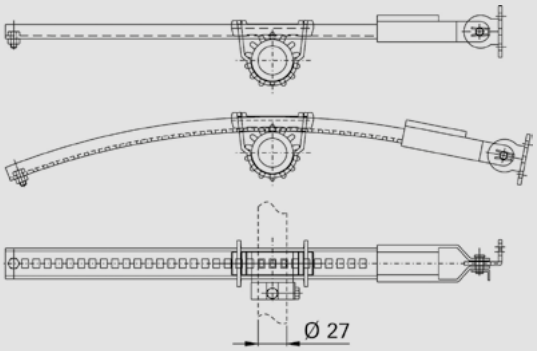

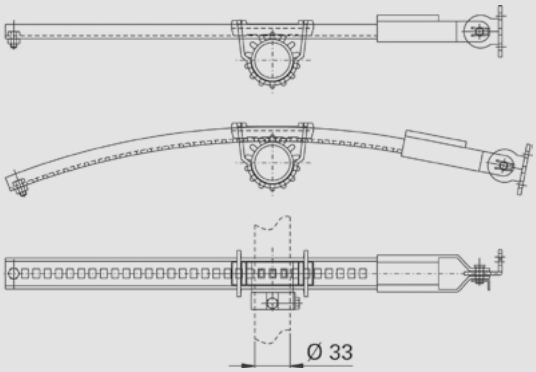

BRACKET AND COUNTER-BRACKET DIMENSIONS

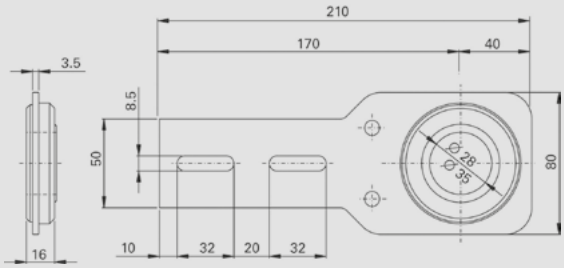

Bracket Ø 27-37 mm

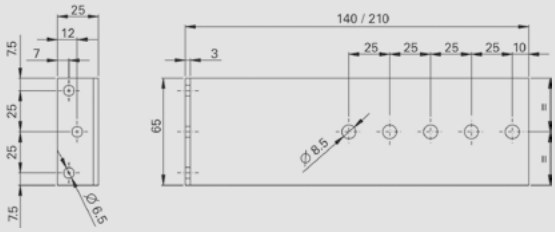

Counter-bracket 140/210 mm

520/600RF - 520/700RF

BOTTOM-HINGED AND OUTWARD-OPENING/PIVOT-HINGED APPLICATION LAYOUTS

APPLICATIONS ON TRANSOM WINDOWS
(rack with pushing compensator)

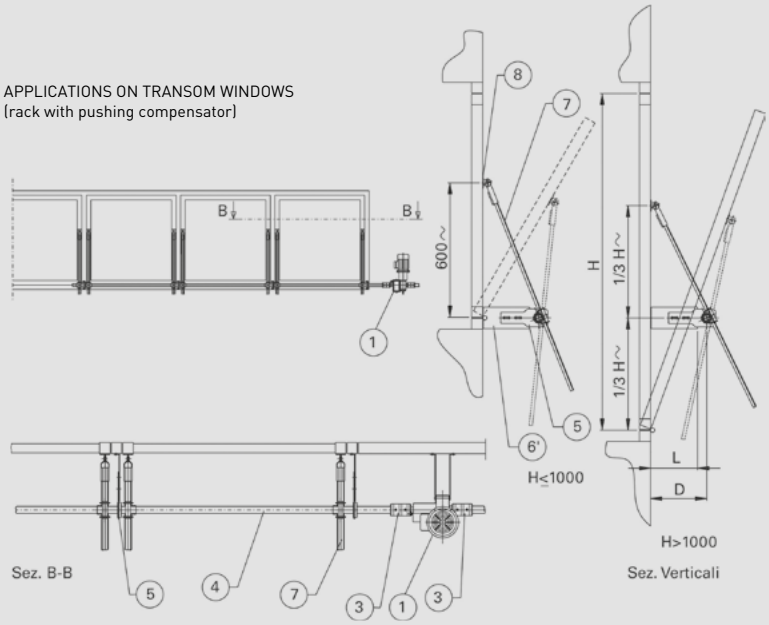

APPLICATIONS ON TOP-HINGED
OR SASH WINDOWS
(racks with pulling compensator)

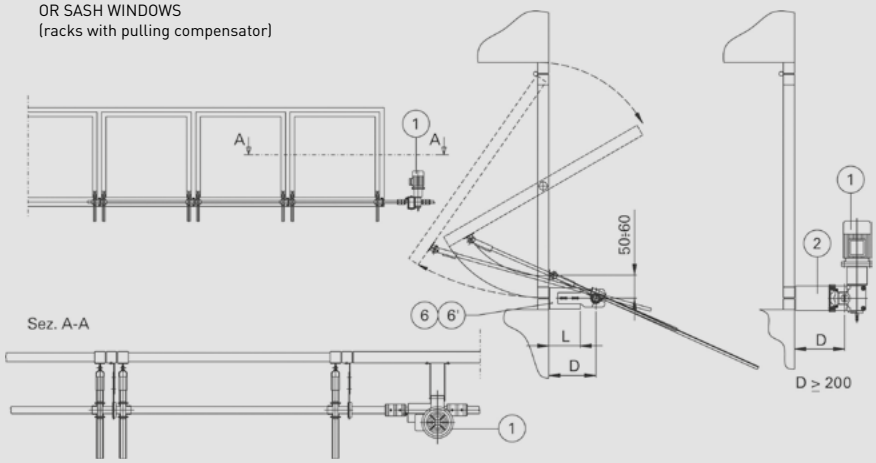

1- GEAR MOTOR UNIT WITH LIMIT STOP
2- UNIT BRACKETS (not included)
3- SHAFT JOINT
4- HORIZONTAL SHAFT
5- BRACKET
6- COUNTER-BRACKET L=140 mm
6'- COUNTER-BRACKET L=210 mm
7- RACK WITH COMPENSATOR
8- FRAME MOUNT

OVER

p209

OPERATOR DIMENSIONS

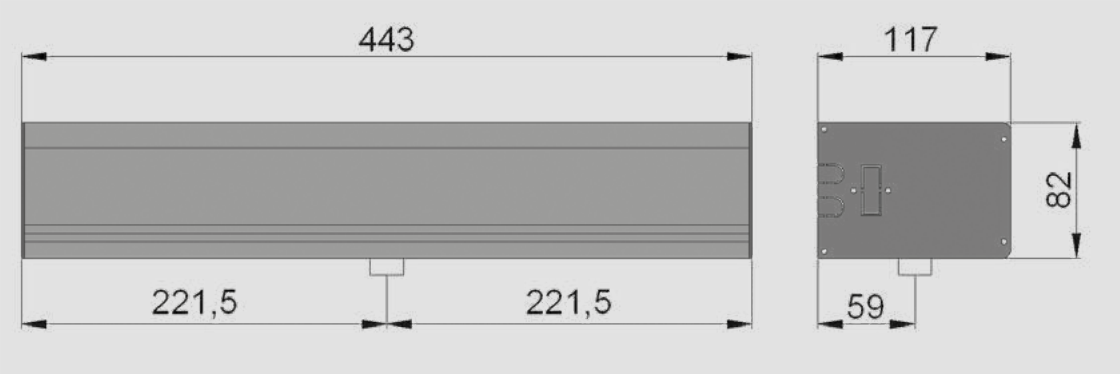

OVER EVO-N

p209

OPERATOR DIMENSIONS

OVER HEAVY

p209

OPERATOR DIMENSIONS

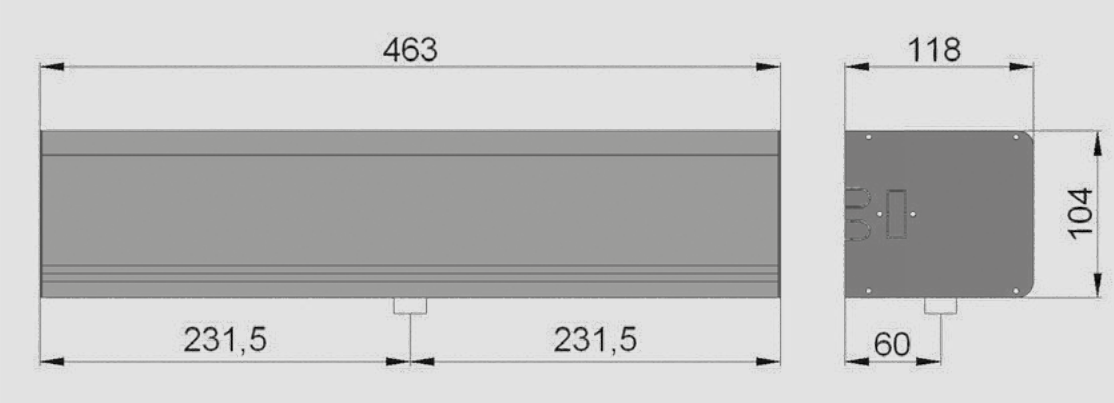

REGULATIONS

We hereby declare that all operators and control units are compliant with the regulations:
2014/30/ EU (EMC) directive replacing the previous 89/336/ EEC

2014/35/EU (LVD) directive replacing the previous 73/23/ EEC.

The Aprimatic Memory System remote controls and receivers in this catalogue have passed the tests set by European regulations:
2014/53/EU RED directive (R & TTE).

KEY TO PRODUCT VERSIONS

Description of application fields:

(R) **RESIDENTIAL**: Doors and gates to be motorised typically of limited weight and size, with few daily operations. (E.g., detached/semi-detached houses).

(C) **CONDOMINIUM**: Doors and gates to be motorised with medium/high frequency of operations per day. (Ex. Medium users, apartments).

(I) **INDUSTRIAL**: Doors and gates of considerable weight and bulk to be motorised. (Ex. Industrial buildings, car parks).

ADOPTED SYMBOLS

- 24 Vcc — Motor supply
- Condominium double wing
- Residential double wing
- Condominium sliding
- Residential up-and-over
- Residential single wing
- 3 m — Maximum lenght per leaf
- IP44 — Protection degree
- MEMORY SYSTEM — Memory System
- 400 kg — Gate wing weight
- STOP — Anti-crushing safety
- Safety Tested — Compliant with EN 12453 standards par. 5.1.1.5 on force limitation
- TÜV Rheinland Product Safety — TÜV certification
- i 217 — Information sheet
- p36 — Catalogue page

SPECIAL SYMBOLS

NEW New item on the catalogue.

S Special item.
(please contact the customer service to verify product availability)

Automation systems for swing gates, up-and-over doors and traffic barriers:

A With hydraulic lock valve on opening only, in the closed position the electric lock is required.

B With hydraulic lock valve on opening and closing, it does not require any electric lock. In case of electromechanical operator, it indicates the self-locking model.

C With hydraulic lock valve on closing only. Does not require the electric lock in closing position.

SF Without hydraulic lock valve, when manually pushing the gate/door moves slowly as if it was braked (F). Electric lock required.

SR Similar to the SF model, but when manually pushing the gate/door moves freely.
as if it lacked an automation system. Electric lock required.

DS Hydraulic operator with hydraulic braking on both closing and opening.

RF Hydraulic operator with flow adjustment valve that allows to obtain a linear movement of the gate/door, also with unbalanced load and high initial weight.

Automation systems for sliding gates:

Z16 Module 4 16-teeth pinion. Slow. Heavy gates.
Z20 Module 4 20-teeth pinion. Fast. Light gates.
C 16-teeth pinion preset for chain drive.
E Electronic control unit on board of the gear motor.

Control devices:

TR: Two - or four-channel transmitter. Rolling Code.
TG: Two - or four-channel transmitter. Quartz - Dip Switches.

ORDER FORM

SLIM **SNK**

Name ..... City/Town .....

Surname ..... Post code ..... Province .....

Company name ....

Address ..... @ .....

STANDARD AUTOMATION

Code Automation LH single wing Anodized silver	Code Automation RH single wing Anodized silver	Code Automation Double wing Anodized silver	span passage max (mm)	lenght total automation (mm)
☐ 42705/201.1	☐ 42705/201.0	☐ 42705/201.2	950	2010
☐ 42705/251.1	☐ 42705/251.0	☐ 42705/251.2	1200	2510
☐ 42705/301.1	☐ 42705/301.0	☐ 42705/301.2	1450	3010
☐ 42705/361.1	☐ 42705/361.0	☐ 42705/361.2	1750	3610
☐ 42705/401.1	☐ 42705/401.0	☐ 42705/401.2	1950	4010
☐ 42705/441.1	☐ 42705/441.0	☐ 42705/441.2	2150	4410
☐ 42705/481.1	☐ 42705/481.0	☐ 42705/481.2	2350	4810
☐ 42705/541.1	☐ 42705/541.0	☐ 42705/541.2	2650	5410

Tick the box matching the model and size you wish to order.
Oversized: tick the box by the higher standard length and specify the exact size of the beam ending with zero or five.

☐☐☐☐ mm

ACCESSORIES

Q.ty	Code	Control unit
☐	**42282/070**	SC6 - 6-way key-operated selector unit
☐	**42282/073**	SC6EC - 6-way key-operated selector unit
☐	**42282/082**	Emergency push-button
Q.ty	**Code**	**Command devices**
☐	**42283/090**	DT90C double technology safe radar
☐	**42283/081**	DM41 bidirectional microwave radar
☐	**42283/092**	RI90C infrared safe radar
☐	**42283/096**	RSI 4C Swing door safety radar
☐	**42283/098**	MS20 microwave contactless switch
Q.ty	**Code**	**Accessories for glass wings**
☐	**42281/061**	PCR - clamps for glass doors
☐	**42281/062**	Set of fitting for mounting glass wings
☐	**42281/063**	Additional reinforcement bracket (1pc)
☐	**42281/064**	Plug for glass door clamp (1pc)
☐	**42280/079**	GTC - Floor guide set for glass wings
Q.ty	**Code**	**Mechanical emergency break-out opening device**
☐	**42280/081**	Guide and adapter set AMS
☐	**42280/088**	1 leaf mech.break out system
☐	**42280/070**	Clamp set for semi-fixed door
☐	**42280/076**	Magnetic contact smi
Q.ty	**Code**	**Emergency release systems**
☐	**42280/084**	Internal manual release for eb2
☐	**42280/085**	External manual release for eb2
Q.ty	**Code**	**Beam accessories**
☐	**42301/001**	ER7 single photocell
☐	**42301/002**	ER7 double photocell
☐	**42282/077**	eb2 nk pre-mtd - electric lock pre-mtd

COVERS

Length clear (mm)	Code cover natural	Code cover silver	Code cover black
2000	☐42102/200	☐42100/200	☐42101/200
2500	☐42102/250	☐42100/250	☐42101/250
3000	☐42102/300	☐42100/300	☐42101/300
3600	☐42102/360	☐42100/360	☐42101/360
4000	☐42102/400	☐42100/400	☐42101/400
4400	☐42102/440	☐42100/440	☐42101/440
4800	☐42102/480	☐42100/480	☐42101/480
5400	☐42102/540	☐42100/540	☐42101/540
COMPLETE AUTOMATION:			

Tick the box matching the model and size you wish to order.
Oversized: tick the box by the higher standard length and specify the exact size of the beam ending with zero or five.

☐☐☐☐ mm

ORDER FORM

WING NK

Name ..... City/Town .....

Surname ..... Post code ..... Province .....

Company name ..... ☎ ..... 📱 .....

Address ..... @ .....

STANDARD AUTOMATION

Code Automation LH single wing Anodized silver	Code Automation RH single wing Anodized silver	Code Automation Double wing Anodized silver	Span Passage max. (mm)	Length Total Automation (mm)
☐ 42710/201.1	☐ 42710/201.0	☐ 42710/201.2	950	2010
☐ 42710/251.1	☐ 42710/251.0	☐ 42710/251.2	1200	2510
☐ 42710/301.1	☐ 42710/301.0	☐ 42710/301.2	1450	3010
☐ 42710/361.1	☐ 42710/361.0	☐ 42710/361.2	1750	3610
☐ 42710/401.1	☐ 42710/401.0	☐ 42710/401.2	1950	4010
☐ 42710/441.1	☐ 42710/441.0	☐ 42710/441.2	2150	4410
☐ 42710/481.1	☐ 42710/481.0	☐ 42710/481.2	2350	4810
☐ 42710/541.1	☐ 42710/541.0	☐ 42710/541.2	2650	5410
☐ 42710/601.1	☐ 42710/601.0	☐ 42710/601.2	2950	6010

Tick the box matching the model and size you wish to order.
Oversized: tick the box by the higher standard length and specify the exact size of the beam ending with zero or five.

☐☐☐☐ mm

ACCESSORIES

Q.ty	Code	Control unit
☐	**42282/070**	SC6 - 6-way key-operated selector unit
☐	**42282/073**	SC6EC - 6-way key-operated selector unit
☐	**42282/082**	Emergency push-button
Q.ty	**Code**	**Command devices**
☐	**42283/090**	DT90C double technology safe radar
☐	**42283/081**	DM41 bidirectional microwave radar
☐	**42283/092**	RI90C infrared safe radar
☐	**42283/096**	RSI 4C Swing door safety radar
☐	**42283/098**	MS20 microwave contactless switch
Q.ty	**Code**	**Accessories for glass wings**
☐	**42281/061**	PCR - clamps for glass doors
☐	**42281/062**	Set of fitting for mounting glass wings
☐	**42281/063**	Additional reinforcement bracket (1pc)
☐	**42281/064**	Plug for glass door clamp (1pc)
☐	**42280/079**	GTC - Floor guide set for glass wings
Q.ty	**Code**	**Mechanical emergency break-out opening device**
☐	**42280/081**	Guide and adapter set AMS
☐	**42280/088**	1 leaf mech.break out system
☐	**42280/070**	Clamp set for semi-fixed door
☐	**42280/076**	Magnetic contact smi
Q.ty	**Code**	**Emergency release systems**
☐	**42280/084**	Internal manual release for eb2
☐	**42280/085**	External manual release for eb2
Q.ty	**Code**	**Beam accessories**
☐	**42301/001**	ER7 single photocell
☐	**42301/001**	ER7 double photocell
☐	**42282/077**	eb2 nk pre-mtd - electric lock pre-mtd

COVERS

Length clear (mm)	Code cover natural	Code cover silver	Code cover black
2000	☐42102/200	☐42100/200	☐42101/200
2500	☐42102/250	☐42100/250	☐42101/250
3000	☐42102/300	☐42100/300	☐42101/300
3600	☐42102/360	☐42100/360	☐42101/360
4000	☐42102/400	☐42100/400	☐42101/400
4400	☐42102/440	☐42100/440	☐42101/440
4800	☐42102/480	☐42100/480	☐42101/480
5400	☐42102/540	☐42100/540	☐42101/540
6000	☐42102/600	☐42100/600	☐42101/600
COMPLETE AUTOMATION:			

Tick the box matching the model and size you wish to order.
Oversized: tick the box by the higher standard length and specify the exact size of the beam ending with zero or five.

☐☐☐☐ mm

ORDER FORM

WING NK H150

Name ..... City/Town .....

Surname ..... Post code ..... Province .....

Company name ....

Address ..... @ .....

STANDARD AUTOMATION

Code Automation LH single wing Anodized silver	Code Automation RH single wing Anodized silver	Code Automation Double wing Anodized silver	Span Passage max. (mm)	Length Total Automation (mm)
☐ 42715/201.1	☐ 42715/201.0	☐ 42715/201.2	950	2010
☐ 42715/251.1	☐ 42715/251.0	☐ 42715/251.2	1200	2510
☐ 42715/301.1	☐ 42715/301.0	☐ 42715/301.2	1450	3010
☐ 42715/361.1	☐ 42715/361.0	☐ 42715/361.2	1750	3610
☐ 42715/401.1	☐ 42715/401.0	☐ 42715/401.2	1950	4010
☐ 42715/441.1	☐ 42715/441.0	☐ 42715/441.2	2150	4410
☐ 42715/481.1	☐ 42715/481.0	☐ 42715/481.2	2350	4810
☐ 42715/541.1	☐ 42715/541.0	☐ 42715/541.2	2650	5410
☐ 42715/601.1	☐ 42715/601.0	☐ 42715/601.2	2950	6010

Tick the box matching the model and size you wish to order.
Oversized: tick the box by the higher standard length and specify the exact size of the beam ending with zero or five.

☐☐☐☐ mm

ACCESSORIES

Q.ty	Code	Control unit
☐	**42282/070**	SC6 - 6-way key-operated selector unit
☐	**42282/073**	SC6EC - 6-way key-operated selector unit
☐	**42282/082**	Emergency push-button
Q.ty	**Code**	**Command devices**
☐	**42283/090**	DT90C double technology safe radar
☐	**42283/081**	DM41 bidirectional microwave radar
☐	**42283/092**	RI90C infrared safe radar
☐	**42283/096**	RSI 4C Swing door safety radar
☐	**42283/098**	MS20 microwave contactless switch
Q.ty	**Code**	**Accessories for glass wings**
☐	**42281/061**	PCR - clamps for glass doors
☐	**42281/062**	Set of fitting for mounting glass wings
☐	**42281/063**	Additional reinforcement bracket (1pc)
☐	**42281/064**	Plug for glass door clamp (1pc)
☐	**42280/079**	GTC - Floor guide set for glass wings
Q.ty	**Code**	**Mechanical emergency break-out opening device**
☐	**42280/081**	Guide and adapter set AMS
☐	**42280/088**	1 leaf mech.break out system
☐	**42280/070**	Clamp set for semi-fixed door
☐	**42280/076**	Magnetic contact smi
Q.ty	**Code**	**Emergency release systems**
☐	**42280/084**	Internal manual release for eb2
☐	**42280/085**	External manual release for eb2
Q.ty	**Code**	**Beam accessories**
☐	**42301/001**	ER7 single photocell
☐	**42301/002**	ER7 double photocell
☐	**42282/077**	eb2 nk pre-mtd - electric lock pre-mtd

COVERS

Length clear (mm)	Code cover natural	Code cover silver	Code cover black
2000	☐42102/200	☐42100/200	☐42101/200
2500	☐42102/250	☐42100/250	☐42101/250
3000	☐42102/300	☐42100/300	☐42101/300
3600	☐42102/360	☐42100/360	☐42101/360
4000	☐42102/400	☐42100/400	☐42101/400
4400	☐42102/440	☐42100/440	☐42101/440
4800	☐42102/480	☐42100/480	☐42101/480
5400	☐42102/540	☐42100/540	☐42101/540
6000	☐42102/600	☐42100/600	☐42101/600
COMPLETE AUTOMATION:			

Tick the box matching the model and size you wish to order.
Oversized: tick the box by the higher standard length and specify the exact size of the beam ending with zero or five.

☐☐☐☐ mm

GENERAL SALES CONDITIONS

GENERAL

The general conditions of sale, as reported below, are understood to be valid for any order received by Aprimatic s.r.l. and are an essential part of each order. Any modifications to these clauses, as well as any special conditions, shall be expressly agreed upon in writing. Orders are only supplied in the packaging format indicated on the price list.

ORDERS

Orders acquired by our sale organisation are subject to the approval of Aprimatic s.r.l.. Orders should comply with the packing as reported in the price list and their net amount may not be lower than € 150.00.

TRANSPORT

The goods shall travel at the Purchaser's own risk; before collection he/she shall verify, in his/her own interest, the integrity of the packages and the quantity of the goods received. Any complaint shall be made directly to the carrier upon delivery. Delivery EXW Incoterms ICC2000 unless otherwise agreed in writing. All delivery dates given shall be deemed as purely indicative and non-binding. Aprimatic s.r.l. shall not be held responsible to the Purchaser for any failure to perform, including late delivery or failure to deliver, which failure to perform is caused by occurrences beyond Aprimatic's reasonable control or in any case caused by an event of force majeure, including, but not limited to, late delivery of non-delivery of material by suppliers, strikes, and other trade union actions, terrorist activities, suspension of electrical energy or difficulties in transportation.

DELIVERIES

The goods are meant to be delivered ex our factory or our external warehouses, if the net amount of the order exceeds € 400.00 for EU country and € 600,00 for Extra EU country. For orders less than the net amounts of € 400.00 for EU country will be applied on the ammount of order € 40 of transport, and for order less than € 600.00 for extra EU country will be apply on the ammount of order € 50 for transport. The terms of delivery are just an indication and have no contractual value.

PRICES

All listed prices are understood to be before VAT. Aprimatic s.r.l., reserves its unquestionable power to modify published list prices if this is required by the cost components of the individual items. The prices indicated on the Price List are not binding. Aprimatic s.r.l. reserves the right to change the price of the Products and/or the discounts, if any, applicable thereto at any time and for any reason, upon 30 (thirty) days' prior written notice to the Purchaser. If any delay in delivery of the Products occurs through the fault of the Purchaser, any possible increase in the price of the Products which may have occurred since the confirmation of the order relating to the Products shall be borne solely by the Purchaser. Any and all taxes, duties, levies, licenses, authorizations, permits and any and all tax and administrative formalities relating to import and/or resale of the Products shall be borne and carried out exclusively by the Purchaser.

RETURNS AND CLAIMS

Any complaints must be sent to Aprimatic s.r.l. in writing within 8 days of receiving of the goods. Returns must be authorised beforehand by Aprimatic s.r.l. Authorized returns must be sent carriage paid to the Aprimatic s.r.l. warehouse with the purchase documents, delivery note and number of authorization enclosed. It will be issued a credit note for the purchase price of the goods minus 20% due to processing fee and testing procedures. Regarding the returns and claims , you can see and downloading the current "conditions" on our website **www.aprimatic.com**

PRODUCTS

Aprimatic s.r.l. shall be entitled to make minor changes to the Products, without being obliged to inform the Purchaser. The information shown in all Aprimatic publications is provided for information purposes only and is subject to modification at any time without prior warning. Aprimatic s.r.l. does not warrant to the Purchaser that the Products comply with the applicable laws and regulations in force in the country (ies) where the Purchaser is established or where the Products are meant to be sold, delivered and/or installed. Aprimatic shall have no obligation to modify the Products in compliance with said laws or regulations and the Purchaser shall be solely responsible for ensuring that the Products and any service of the Purchaser conform to the applicable technical and safety standards, laws and regulations in force in said country (ies).The Purchaser acknowledges that the Products may be dangerous to persons or property when not installed or used in strict compliance with Aprimatic's written instructions for installation and used furnished by Aprimatic and with the safety requirements specified in the EN 12445 and EN 12543. Aprimatic s.r.l. expressly disclaim liability for any personal injury or property damage resulting from installation or use of the Products, other than in strict compliance with Aprimatic's written instructions with respect to installation and use, or from installation or use of the Products together with safety accessories or other products not manufactured by Aprimatic, it being understood that the maximum liability of Aprimatic to the Purchaser or to any other person or entity, arising out of or in connection with the Products and based on a claim of breach or under warranty, shall in no case exceed the price paid to Aprimatic for the Products which gives rise to the claim, loss or damage. In no event shall Aprimatic s.r.l. be liable for special and consequential damages, including, without limitation, loss of profit.

PAYMENTS

Payments shall be made to Aprimatic s.r.l. within the agreed term and for the agreed amount. Any delay in the payment of invoices beyond the terms agreed upon triggers the immediate application of bank interest and entails the ensuing suspension of deliveries.

WARRANTIES

Sold goods are guaranteed against manufacturing defects and/or defects of materials for 24 months from the date of installation certified by sending Aprimatic s.r.l., the "Warranty Certificate" for the products provided with it. Exception is made for the products of the Racing Kit line, whose warranty has a 36-month duration from the installation date as certified by sending said certificate. In order for the warranty certificate to be considered valid, it must be sent within 10 days from the date of installation and filled in all its parts. Alternatively, and for the products that are not provided with such a certificate, the warranty shall have a duration of 30 months from the date of production. The warranty terms and conditions are verified by Aprimatic s.r.l. under its final judgment and by the Repair centres it has put in charge of it. The costs of any calling and servicing rights are to the Purchaser's charge. Aprimatic s.r.l. reserves the right not to provide warranty if the powering of the plant is not entirely realised with APRIMATIC products and the installation is not made up to standard. The warranty shall not be in force when operation defects depend on structural flaws, i.e. incompatibility, of the frames to be powered with APRIMATIC products.
The material recognised in warranty shall be accepted for repair only if shipped free port; after the repair or replacement it shall be shipped back freight forward. The replaced material shall remain property of APRIMATIC. The warranty does not include:

- Breakdown or damages caused by transport.
- Breakdown or damages caused by faults in the electrical system and/or carelessness, negligence in using plant and in any case of misuse.
- Breakdown or damages due to tampering or any negligent behaviours or behaviours not conforming with standards by the installer or purchaser without conforming to instructions provided by the manufacturer.
- Breakdown or damages due to use of non-original spare parts.
- Defects caused by chemical agents or atmospheric conditions.
- Consumables.
- Interventions for supposed faults or convenient verifications.

Aprimatic s.r.l. guarantees exclusively the conformity of the Products to the technical specifications submitted to Buyer and published on the web site www.aprimatic.com, provided that the Products have been correctly transported, stored, installed, used and repaired by Buyer (including in compliance with the Aprimatic's manual); in case of defects, purchaser shall write a "reserve" on the delivery note and give a detailed notice thereof in writing to Aprimatic within 7 days from delivery or from discovery, in case of hidden defects and anyhow not later than two years from delivery and Aprimatic shall only be bound to, at its own choice: replace the defective Products or, totally or partially, reimburse their price. Apart from what set forth herewith, Aprimatic shall bear no other responsibility, in particular any liability for damages (including loss of profit or any other subsequent loss) here by expressly excluded.

OWNERSHIP OF GOODS

Aprimatic s.r.l. remains the owner of the goods until their complete payment by the customer. If the seller does not intend to repossess goods for which payment has not been made in full, the seller shall have the right to apply interest charges at a rate of 5% more than the current discount rate.

GENERAL RECOMMENDATIONS

This price list cancels and replaces all previous price lists. In accordance with current safety standards, it is essential to install genuine APRIMATIC control units and accessories. Aprimatic s.r.l. declines all responsibility for injury or damage, even to third parties, deriving from failure to observe these safety standards or from bad craftsmanship in the installation or operation of the goods.

COMPETENT COURT

For any dispute that might arise, the competent court is understood to be the Court of Turin, Italy.

EXTERNAL CLOSING SYSTEM

R251FM / **R**251 FE **PAG. 34**

SWING GATES

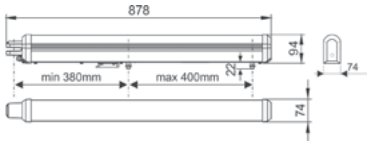

TWENTY 270 **PAG. 40**

SWING GATES

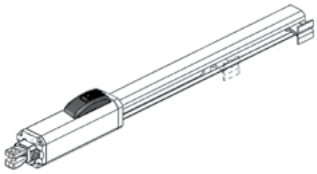

FORTY 270 / 390 **PAG. 42**

SWING GATES

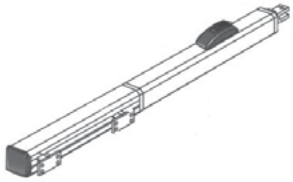

EM 73N **PAG. 44**

SWING GATES

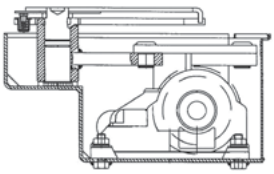

ZT 70 **PAG. 46**

SWING GATES

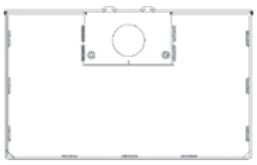

ONDA 624 / 623 **DA PAG. 58**

SLIDING GATES

ONDA 800 / 801 **PAG. 68**

SLIDING GATES

AT 80E **PAG. 64**

SLIDING GATES

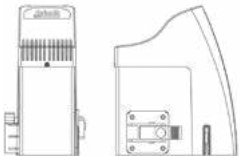

ONDA 2000 / 2001 **PAG. 66**

SLIDING GATES

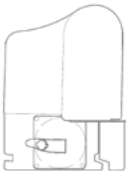

AT 88T **PAG. 68**

SLIDING GATES

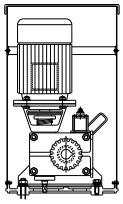

AT 90T / **AT** 92T **PAG. 70**

SLIDING GATES

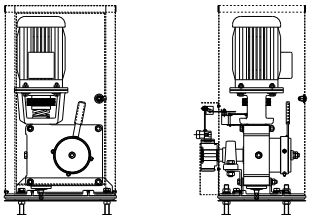

ALZO **PAG. 78**

SLIDING GATES

AT 50 **PAG. 80**

UP-AND-OVER, SECTIONAL, FOLDING DOORS

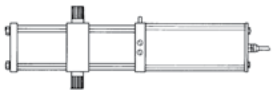

MATIC-BOX 800 / 1200 **PAG. 82**

UP-AND-OVER, SECTIONAL, FOLDING DOORS

HARRIER E **PAG. 90**

TRAFFIC BARRIERS

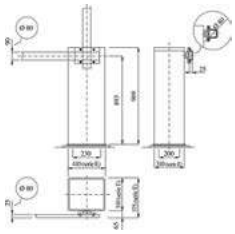

HARRIER LUX **PAG. 92**

TRAFFIC BARRIERS

DOORS, WINDOWS AND SHUTTERS

SWING GATES

AP350 **PAG. 38**

WINDOWS AND SHUTTERS

BUONGIORNO **PAG. 150**

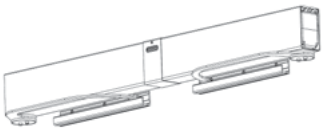

WINDOWS AND DOMES

O2M **PAG. 156**

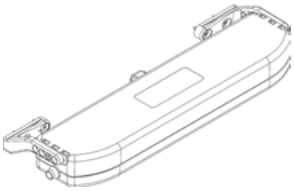

WINDOWS AND DOMES

APRICOLOR VARIA **PAG. 160**

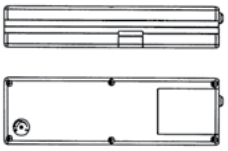

WINDOWS AND DOMES

ST 450N **PAG. 162**

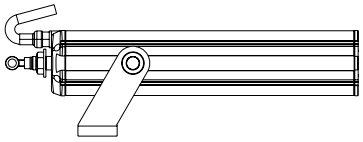

WINDOWS AND DOMES

APRICOLOR VARIA S / ST **PAG. 158**

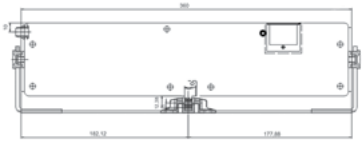

WINDOWS AND DOMES

APRILINEARE
DUO-TRY SYSTEM **PAG. 164**

WINDOWS AND DOMES

APRICOP **PAG. 167**

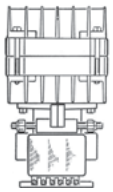

WINDOWS AND DOMES

INDUSTRIAL RACK **PAG. 168**

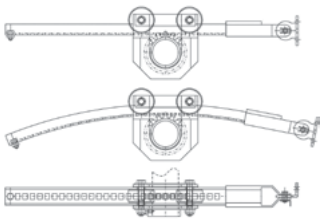

WINDOWS AND DOMES

WIMATIC **PAG. 146**

Aprimatic is a registered trademark belonging to Aprimatic s.r.l.

All Aprimatic product bear the mark CE

Aprimatic s.r.l. reserves the right to make changes
to its products at any time without prior notice.

www.aprimatic.com | info@aprimatic.it

comunico

CAT0022

APRIMATIC is a trademark of Aprimatic S.r.l.
Via Emilia, 147 • 40064 Ozzano dell'Emilia BO (ITALY)
T +39-051.69.60.711 • F +39-051.69.60.722
www.aprimatic.it • info@aprimatic.it