CISA®

ALLEGION™

FAST panic exit devices

Rim version

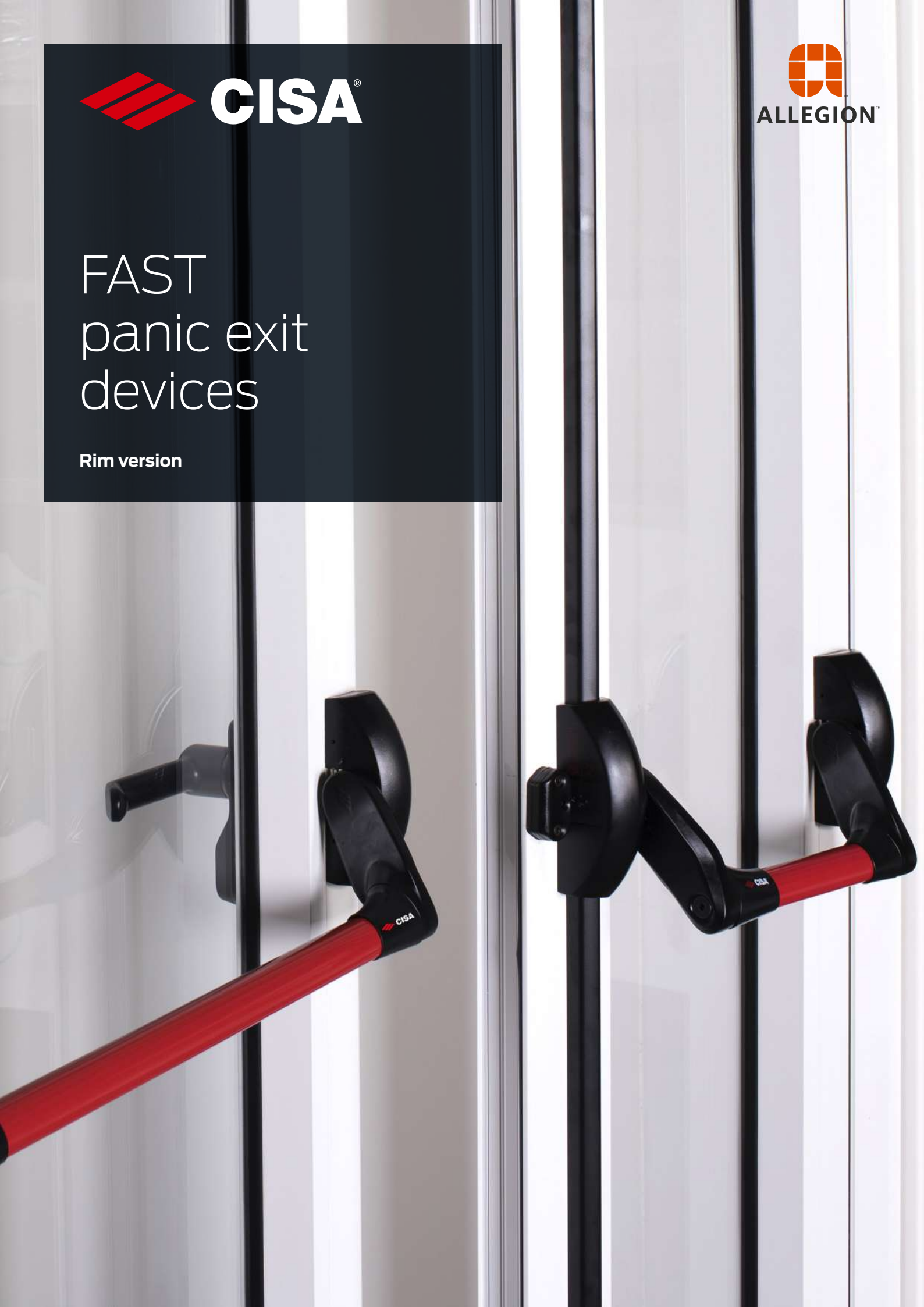

CISA FAST panic exit devices

Modular, reliable, non-handed with a wide range of products and accessories, adaptable to any type of door frame and controlled by electric handles, electric strikes or microswitches.

In addition to the traditional features of CISA panic exit devices, the new FAST range has been further enhanced with a clean, distinctive design and is quicker to use, easy to install and perfectly interchangeable with previous versions.

The high-impact new look highlights the strong construction and reliability of FAST, and installation times are cut by up to 50% compared to previous versions.

Quick, easy installation

With FAST, installation times are reduced by half

Thanks to recent technical improvements, installing FAST panic exit devices is quicker than installing earlier models by as much as 50%.

Installation time is faster because:

- Additional locking points are installed on support plates with a quick-lock system and adjustments can be carried out on site;
- Adjustments are easy to carry out via a flexible cable connecting the mechanism with the additional locking points*;
- The adjustment screws on the main mechanism are easy to reach as they are ergonomically positioned to help the locksmith;
- Simple instructions are given to cut the bar, covers and cable which do not require any measurements;
- The bar is installed in a few simple steps after fixing the mechanisms;
- The covers are fitted with clips and are quick to install, assembly is reinforced with dowels;
- Instructions are simple to follow.

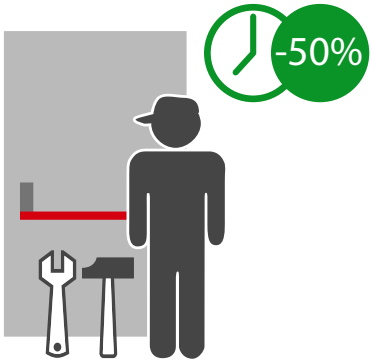

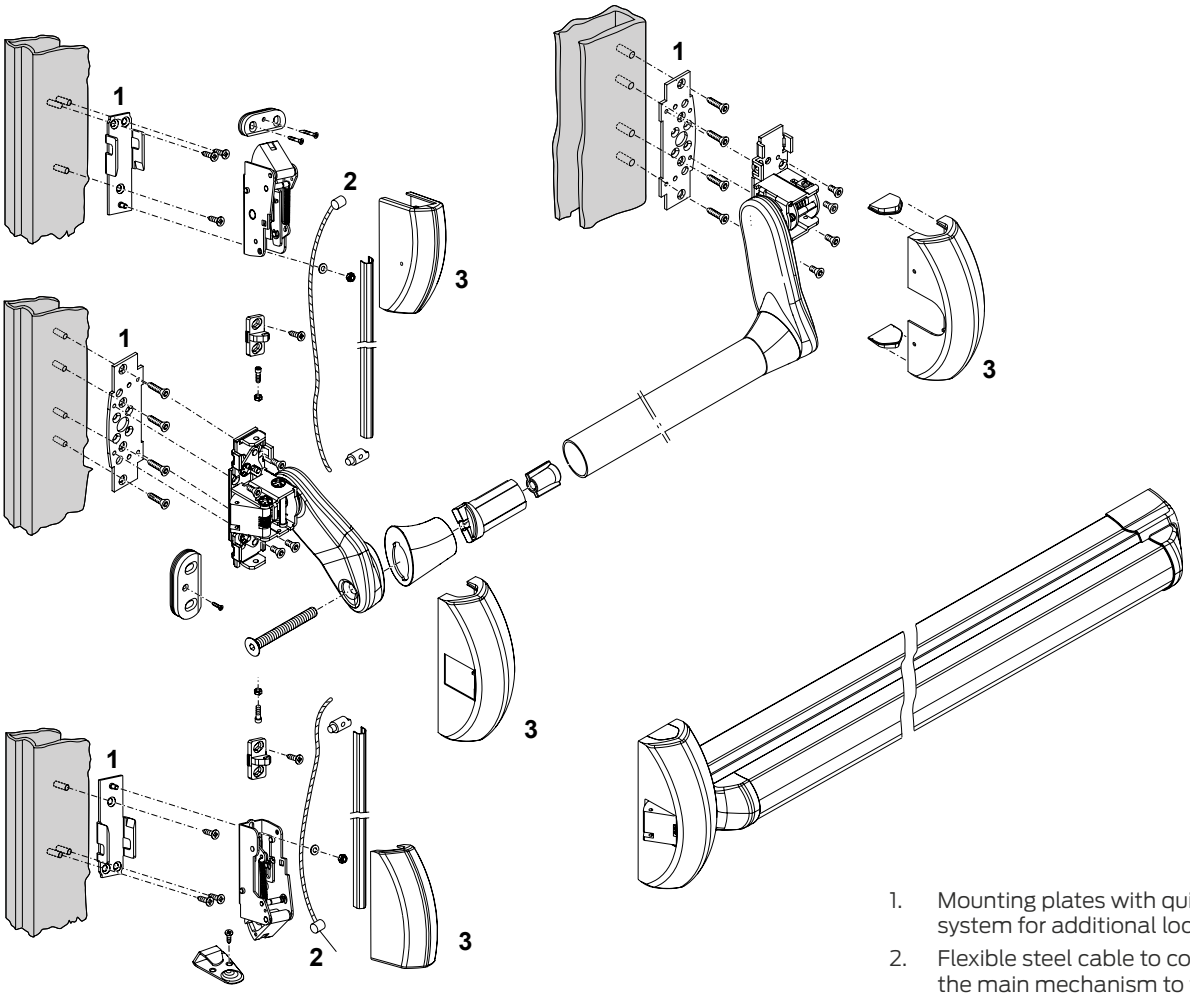

1. Mounting plates with quick-lock system for additional locking points.
2. Flexible steel cable to connect the main mechanism to the additional locking points. *
3. Clip-on cover for quick installation with dowel for reinforced assembly.

* available in the version with threaded rods for conventional assembly

The many benefits of CISA FAST

Family feeling

The new design of the FAST range applies the principle of homogeneity - aesthetic continuity among the various types of panic exit device so several different designs can coexist in the same environment.

Antibacterial protection

The new antibacterial treatment for panic exit devices offers many advantages:

- it is safe for humans; it protects against the spread of microorganisms;
- it inhibits the growth of bacteria and dangerous fungi;
- it provides continuous protection.

All CISA Fast Plus models, in every colour, will be supplied with antibacterial treatment.

Certifications.

The treatment has been successfully tested on one of the most common strains of bacteria: Staphilococcus aureus. CISA commissioned an external laboratory to conduct the tests in compliance with the European standard ISO 22196:2011.

Silent operation

The connecting cable used with the FAST panic exit devices reduces the operating noise associated with traditional rods.

Complete interchangeability with the previous version

CISA's priority when restyling this range was to ensure a smooth and seamless changeover to the new versions for customers who already owned previous models. Switching a CISA panic exit device from one of the previous ranges to FAST is quick, easy and requires no work on the door.

Easy maintenance

As the cover on all the products in the FAST range has no fixing screws, it can be removed quickly to check the panic exit device has been correctly installed on the door and to lubricate it.

Re-installation afterwards is just as quick and easy and no tools are needed.

Unscheduled maintenance is reduced.

Finishes:

So much more than technology. The focus on design and colour combination make CISA FAST panic exit devices highly versatile products, blending into any environment.
The PVD finishes in particular give the product both style and strength.

Finishes: painted

Red
RAL 3000
Fin. 41

Matt
black
Fin. 44

Green
RAL 6001
Fin. 43

Grey
RAL 9006
Fin. 97

White
RAL 9010
Fin. 45

Stainless
steel grey
Fin. B9

Finishes: anodised for FAST Touch bar

Satin-finished
anodised
aluminium
Fin. 62

Anodised
bronze
Fin. 64

Brass-
plated
Fin. A1

Finishes: PVD

Satin-finished
stainless steel
Fin. C2

European standards and CE certification

Since 2002, emergency exit systems have been regulated by two specific European standards: EN 1125 for panic exit devices and EN 179 for emergency exit devices. On 16 December 2008 the former standard EN 1125:1997:02 was updated to the NEW EUROPEAN STANDARD on panic exit devices EN 1125:2008. As a result, since 1 January 2010, only products which have been granted a mark according to the new standard may be marketed.

CISA passed all the tests and on 2 January 2009 it was awarded the new certificates for all the “Rim” versions. In 2002 it was the first company in Italy to introduce CE marking on its panic exit devices.

In 2013 legislation came into effect whereby all non-CE marked panic exit devices had to be replaced.

Main EN 1125:2008 standard requirements

1. A panic exit device must allow opening at any time by anyone (including children, the elderly or the disabled, etc.), by applying minimal pressure with the hands, body or anything else on any point of the horizontal bar.
2. A panic exit device must be able to be installed on public passage doors (e.g. in shops, offices, hospitals, schools etc.) and must therefore be suitable for extremely intense use.
3. A panic exit device, if installed on a fire door, must be able to guarantee that, after evacuation, the door will close again also in the event of extremely high temperatures.
4. A panic exit device must be guaranteed against corrosion.
5. The bar projection of a panic exit device must not exceed 150 mm.
6. Every panic exit device must carry: the manufacturer's name and trademark, identifying codes, applicable EU standard number (UNI EN 1125), month/year of end user installation by the manufacturer.
7. There may be two types of panic exit device: with a class A push-bar and with a class B touch-bar.

500,000 reasons to choose CISA FAST

Today, in keeping with its policy of ongoing improvement and compliance with applicable standards, CISA has obtained further certification from ICIM, the certification body recognised throughout Europe.

This voluntary certification certifies the mechanical durability of FAST panic exit devices for 500,000 cycles on doors weighing 400 kg, compared to the provisions of the highest grade of the standard (Grade 7) which tests 200,000 cycles on doors weighing over 200 kg.

The FAST range

A wide range of panic exit devices and accessories to meet all installation needs on all kinds of door frames

Key features

- Extremely quick and easy to install.
- Completely modular system.
- Pre-assembly plates for installing additional locking points.
- Adjustable additional locking points installed with a quick-lock system.
- Version for fire doors available.
- CE marking in accordance with 89/106/ EEC DIRECTIVE, issued by ICIM.
- Voluntary product certification issued by the independent certifying body ICIM.

FAST Touch

Certifications and markings

- CE marking in accordance with Construction Products Regulation EU 305/2011, issued by ICIM.
- Voluntary product certification issued by the independent certifying body ICIM according to UNI EN 1125.

Technical features

- Painted aluminium bar and body which can be shortened to 300 mm on all models.
- Painted aluminium alloy cover.
- Deadlocking chrome-plated aluminium alloy latchbolt.

Standard configuration operation

- From the inside: by pressing the bar.
- From the outside: with the key and/or handle*.

Hand

0 = non-handed.

Supplied as standard

- Special strikers.
- Fixing screws.
- Installation and maintenance instructions.
- ICIM and CE certificates of compliance.

On request:

- Outside access devices.
- Extended bolts.
- Version with microswitch item 106195050 (spec. LA).
- Version with hold open device item 107165500 (spec. FG).
- Fire door version with steel latchbolts (spec. FG).

Finishes: see page 5.

FAST Push

Certifications and markings

- CE marking in accordance with Construction Products Regulation EU 305/2011, issued by ICIM.
- Voluntary product certification issued by the independent certifying body ICIM according to UNI EN 1125.

Technical features

- Painted aluminium alloy cover.
- Painted steel or stainless steel bar which can be shortened (to be ordered separately).
- Deadlocking chrome-plated aluminium alloy latchbolt.

Standard configuration operation

- From the inside: by pressing the bar.
- From the outside: with the key and/or handle*.

Hand

0 = non-handed.

Supplied as standard

- Special strikers.
- Fixing screws.
- Installation and maintenance instructions.
- ICIM and CE certificates of compliance.

On request:

- Horizontal bar.
- Outside access devices.
- Extended bolts.
- Version with microswitch item 106195060 (spec. LA).
- Version with hold open device item 107165500 (spec. FG).
- Fire door version with steel latchbolts (spec. FG).

* Operation from the outside with the key only is only possible on panic exit devices with a single side locking point.

FAST Push-pad

Technical features

- Painted aluminium alloy cover.
- Deadlocking chrome-plated aluminium alloy latchbolt.

Standard configuration operation

- From the inside: by pushing the pad.
- From the outside: with the key and/or handle*.

Hand

0 = non-handed.

Supplied as standard

- Special strikers.
- Fixing screws.
- Installation and maintenance instructions.
- ICIM and CE certificates of compliance.

On request:

- Outside access devices.
- Extended bolts.
- Version with hold open device (spec. FG).
- Fire door version with steel latchbolts (spec. FG).

Certifications and markings

- CE marking in accordance with Construction Products Regulation EU 305/2011, issued by ICIM.
- Voluntary product certification issued by the independent certifying body ICIM according to UNI EN 179.

FAST Flow

System with no floor striker The door opens freely when the deadbolt is withdrawn, thanks to a special system that keeps the rods inside the door.

Technical features

- Painted aluminium/aluminium alloy cover.
- Chrome-plated aluminium alloy deadbolts.
- Forward stroke 13.5 mm.
- Deadbolt diameter 15 mm.
- Patented deadbolt locking system.
- Adjustable strikers for overlap height 10 mm - 20 mm (patented system).

Standard configuration operation

- From the inside: by pushing the bar, the deadbolts withdraw
- From the outside: with the key and/or handle*.

Hand

0 = non-handed.

Supplied as standard

- Deadbolt extension kit
- Special strikers.
- Fixing screws.
- Installation and maintenance instructions.
- ICIM and CE certificates of compliance.

On request:

- Horizontal bar.
- Outside access devices.

Certifications and markings

- CE marking in accordance with Construction Products Regulation EU 305/2011, issued by ICIM.
- Voluntary product certification issued by the independent certifying body ICIM according to UNI EN 1125..

Outside access devices

New handle design

- Longer lever handle available (+55 mm for item 1.07078.68) for easier grip
- RTD (Return to door) handle design provides resistance to extraction and stops clothing from getting caught

The ideal solution when installing in reduced spaces

- Version with lower handle (item 1.07078.36.0)
- 47 mm protrusion from the door, ideal in reduced spaces

Easier to open/close without catching fingers

- The handle is positioned below the cylinder, leaving more space to rotate and reducing the risk of hitting fingers against the cylinder
- Easier to insert and turn the key

Finishes:

- The outside access devices are available with the following finishes: painted steel grey, white and grey
- A PDV satin-finished stainless steel treatment is also available

Same footprint on all versions

The new OADs are perfectly interchangeable with previous versions

Integration into a master key system

Outside access devices item 707836/38 are fitted with a Euro profile cylinder so they can easily be integrated into master key systems

Additional locking points

Technical features

- Painted aluminium alloy cover.
- Chrome-plated aluminium alloy latchbolts/deadbolts.
- Deadlocking top/bottom latchbolts.
- For doors with 2500 mm maximum height and horizontal bar 1100 mm from the floor.

Supplied as standard

- Special strikers.
- Fixing screws.
- Installation and maintenance instructions.
- ICIM and CE certificates of compliance.

Electric handle

Technical features

- Non-handed handle.
- Idle handle when there is no power supply.
- Key-operated mechanical override: the key operates the handle. When the key is taken out, the handle is deactivated.
- Wiring system with connector to ensure perfect insulation of the connections.
- LED built into the handle body to view door status.
- Nickel-plated steel case.
- Painted aluminium alloy cover.
- Electric hold open device can be fitted.
- Power input to handle by booster device supplied as standard.
- Rated voltage 12/24 V AC/DC.
- Operating voltage min. 5 V, max 28 V.

Operation

- Handle with opening for duration of electric impulse.
- The handle can only be opened for the duration of the impulse, a timer must be installed in the plant (timer item 1.07022.20.0 to be ordered separately).

Supplied as standard

- Cylinder item 1.0G304.02.0.12.
- Booster module item 1.07022.01.0.
- 8/9 mm spindle.

Electric strikes

Technical features

- Operating voltage 12, 24 V AC and 12, 24 V DC - CE.
- Zinc-plated steel case.
- Painted aluminium alloy cover.
- Chrome-plated aluminium alloy strike.

Operation

- The electric strike allows for remotely controlled door opening.

Hand

- Non-handed for left-hand and right-hand doors.

Supplied as standard

- Nylon spacers item 1.07089.12.0.
- Fixing screws.
- Installation instructions.

Version with with limited release

By holding down the button the striker is energised; the door can only be opened while the button is held down (the striker is released when it receives current input).

This version requires models equipped with a microswitch to control door open/closed status.

Version with permanent release

By holding down the button the striker is energised; it is released on receiving the first impulse, allowing the door to be opened. The electric strike will lock again, closing the door (the strike is released when it receives current input).

Version with energised coils

By holding down the button, input to the strike is discontinued and the door can only be opened while the button is held down (the strike is released when it does not receive current input).

Polaris

With CISA POLARIS, emergency exits are quick and easy to find thanks to the lights on the bar. It can be installed on all FAST Touch panic exit devices instead of the supplied bar. The lights come on the moment power fails, making it easy to find the way out in the dark or smoke.

Technical features

- Painted steel bar
- ABS inserts
- Can be shortened up to 600 mm and 720 mm (for eFAST)
- LEDs (120 lumen)

Supplied as standard

- Steel bar
- LED lights
- Wiring

System with LED lights that can be installed on FAST Touch and eFAST.

Finding an emergency exit when visibility is lowbecomes easy.

Adjustable strikers

Compatibility

CISA adjustable strikers can be installed to match all the FAST series panic exit devices.

Striker for aluminium doors item 1.07072.31.0

Vertical and horizontal adjustment options allow you to:

- Carry out installation in a few, simple steps
- Avoid having to use spacers
- Obtain flush compensation between - 8 mm and + 4 mm
- Ensure adjustment accuracy

Striker for factory doors/ gates item 1.07072.32.0

The wide range of adjustment allows you to:

- Install on doors with leaf to frame clearance of up to 25 mm
- Obtain flush compensation between - 4 mm and + 7 mm

Striker for wood and PVC doors item 1.07072.33.0

The special L-shape and position of the top fixing screws allow:

- Cantilevered installation on profiles with 14 to 24 mm overlap

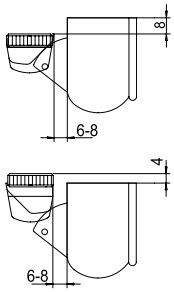

Installation diagram 1.07072.31.0

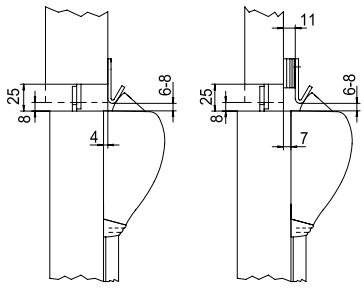

Installation diagram 1.07072.32.0

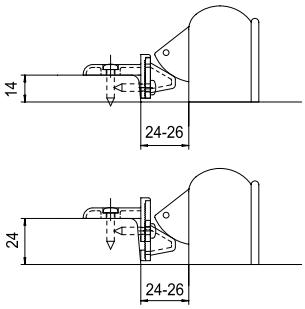

Installation diagram 1.07072.33.0

Glass kits

EASY INSTALLATION

CISA glass kits are designed to offer a complete range of solutions for all kinds of installations of FAST panic exit devices on glass doors.

Modularity

- The necessary parts are available in kit form, so only the parts actually needed for the installation can be chosen, allowing for product customisation.
- There are glass kits to match the whole range of FAST series CISA panic exit devices.

Technical features

- Steel mounting plates and components.

Supplied as standard

- Fixing screws.
- Installation instructions.

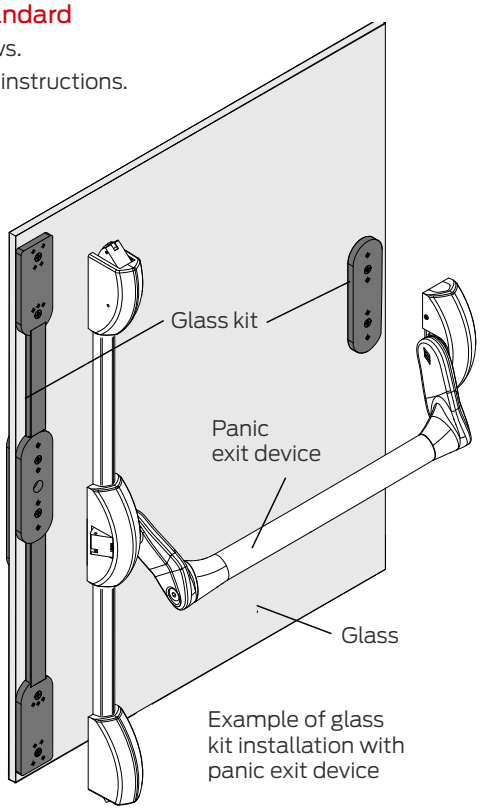

Example of glass kit installation with panic exit device

TYPE	DESCRIPTION	L	UNIT WEIGHT (kg)	NO. PCS	ITEM TYPE	ITEM DIM.	ITEM HAND	ITEM FIN.	ITEM PERS.
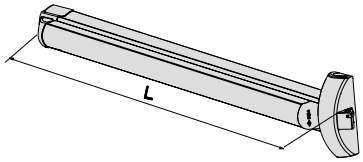	Dead-locking side latchbolt **Supplied as standard:** • Strikers item 1.07072.20.0 **On request:** • Striker item 1.07072.21.0 • Outside access devices item 1.07078.35/36/38/68/69	1200	3.700	1	**1**	**59801**	**10**	**0**	
		840	2.684	1	**1**	**59801**	**11**	**0**	
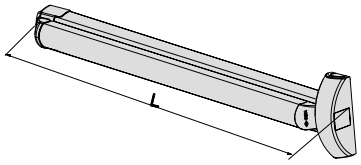	MODULAR VERSION Deadlocking side latchbolt with override option **Supplied as standard:** • Strikers item 1.07072.20.0 **Can be installed with:** • Pair of top/bottom latchbolts item 1.07063.61.0 • Pair of side latchbolts item 1.07063.51.0 • Pair of top/side latchbolts item 1.07063.66.1 • Pair of top/bottom deadbolts item 1.07063.71.0 **On request:** • Striker item 1.07072.21.0 • Outside access devices item 1.07078.36/38/68/69	1300	3.760	1	**1**	**59811**	**09**	**0**	
		1200	3.472	1	**1**	**59811**	**10**	**0**	
		840	3.000	1	**1**	**59811**	**11**	**0**	
	PVD satin-finished stainless steel treatment (fin. C2)	1200	3.472	1	**1**	**59811**	**10**	**0**	**C2**
		840	3.000	1	**1**	**59811**	**11**	**0**	**C2**
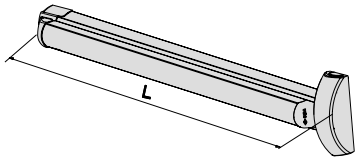	MODULAR VERSION Without central latchbolt **Can be used with:** • Pair of top/bottom latchbolts item 1.07063.61.0 • Pair of side latchbolts item 1.07063.51.0 • Pair of top/side latchbolts item 1.07063.66.1 • Set of top/bottom deadbolts item 1.07063.71.0 **On request:** • Striker item 1.07072.21.0 • Outside access devices item 1.07078.36/38/68/69	1200	3.500	1	**1**	**59816**	**10**	**0**	
		840	3.000	1	**1**	**59816**	**11**	**0**	
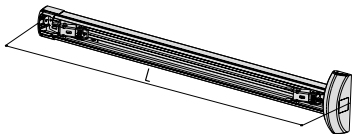	MODULAR VERSION WITHOUT BAR SUPPLIED Deadlocking side latchbolt with override option **Supplied as standard:** • Strikers item 1.07072.20.0 **Can be installed with:** • Pair of top/bottom latchbolts item 1.07063.61.0 • Pair of side latchbolts item 1.07063.51.0 • Pair of top/side latchbolts item 1.07063.66.1 • Set of top/bottom deadbolts item 1.07063.71.0 **On request:** • Striker item 1.07072 .21.0 • Outside access devices item 1.07078.36/38/68/69	1200	3.472	1	**1**	**59811**	**10**	**0**	**00**	**SB**

Finishes:
- SUPPLIED AS STANDARD: Black cover red bar

On request: (only item 1.59811-10-0):
- Black cover black bar (fin. 44)
- White cover white bar (fin. 45)
- Grey cover grey bar (fin. 97)
- Cover and bar painted stainless steel grey (fin. B9)
- PVD satin-finished stainless steel treatment (fin. C2)

TYPE	DESCRIPTION		UNIT WEIGHT	NO. PCS	ITEM TYPE	DIM.	HAND	FIN.	PERS.
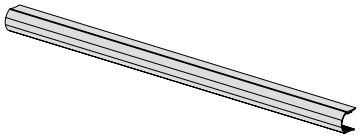	Bar to be installed with panic exit device item 1.59811.10.0.00.00.SB Finishes: standard, black (fin. 00) **BAR COLOUR OPTIONS** • Satin-finished anodised aluminium (fin. 62) • Anodised bronze (fin. 64) • Brass-plated (fin. A1) • Red (fin. 41) • Yellow (fin. 42) • Green (fin. 43) • White (fin 45) • Grey (fin. 97) • Stainless steel grey (B9)		1.000	1	**1**	**06196**	**43**	**0**	
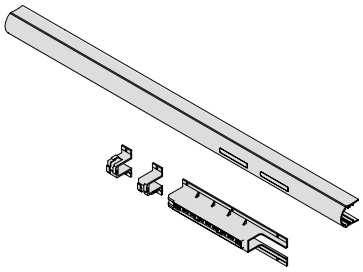	**POLARIS** Polaris kit containing bar, LEDs and wiring components. To activate the emergency or light functions, CISA Polaris must be connected to a special transformer (not supplied) with the characteristics indicated on the instruction sheet. **BAR COLOUR OPTIONS** • Black (fin. 00) • Red (fin. 41) • White (fin 45) • Grey (fin. 97) • Stainless steel grey (B9) • PVD satin-finished stainless steel treatment (fin. C2)		1.000	1	**1**	**06196**	**60**	**0**	

TYPE	DESCRIPTION	UNIT WEIGHT	NO. PCS	ITEM TYPE	DIM.	HAND	FIN.	PERS.
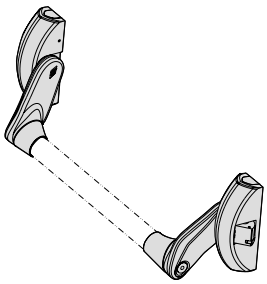	Dead-locking side latchbolt **Supplied as standard:** • Striker item 1.07072.20.0 **On request:** • Horizontal bar series 07007 • Striker item 1.07072.21.0 • Outside access devices item 1.07078.35.36/38/68/69	2.150	1	**1**	**59001**	**10**	**0**	
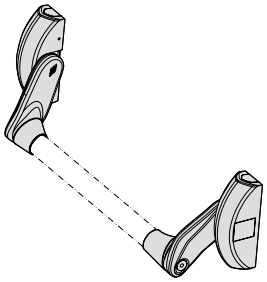	MODULAR VERSION Deadlocking side latchbolt with override option **Supplied as standard:** • Strikers item 1.07072.20.0 • Can be installed with: • Pair of top/bottom latchbolts item 1.07063.61.0 • Pair of side latchbolts item 1.07063.51.0 • Pair of top/side latchbolts item 1.07063.66.1/2 • Pair of top/bottom deadbolts item 1.07063.71.0 **On request:** • Horizontal bar series 07007 • Striker item 1.07072.21.0 • Outside access devices item 1.07078.36/38/68/69	2.200	1	**1**	**59011**	**10**	**0**	
	PVD satin-finished stainless steel treatment (fin. C2)	2.266	1	**1**	**59011**	**10**	**0**	**C2**
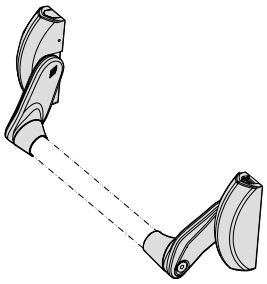	MODULAR VERSION WITHOUT CENTRAL LATCHBOLT **Can be used with:** • Pair of top/bottom latchbolts item 1.07063.61.0 • Pair of side latchbolts item 1.07063.51.0 • Pair of top/side latchbolts item 1.07063.66.1/2 • Pair of top/bottom deadbolts item 1.07063.71.0 **On request:** • Horizontal bar series 07007 • Striker item 1.07072.21.0 • Outside access devices item 1.07078.36/38/68/69	2.050	1	**1**	**59016**	**10**	**0**	
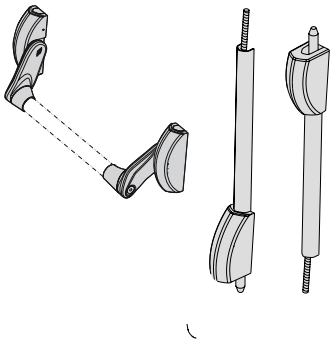	Modular panic exit device complete with rods for top/bottom locking points **Supplied as standard:** • Panic exit device • 2 adjustable top strikers • 2 floor strikers • 2 threaded rods • 2 rod covers • 2 rod guide hooks • 1 pair of top/bottom deadbolts This solution does not work with standard panic exit devices, use only the FAST Flow panic exit device in the kit	2.050	1	**1**	**59014**	**10**	**0**	
	Finishes: • STANDARD: painted black **On request: (only item 59011.59014):** • Painted white (fin. 45) • Painted grey (fin. 97) • Painted stainless steel grey (fin. B9) • PVD satin-finished stainless steel treatment (fin. C2)							

TYPE	DESCRIPTION	L	UNIT WEIGHT (kg)	NO. PCS	ITEM TYPE	ITEM DIM.	ITEM HAND	ITEM FIN.	ITEM PERS.
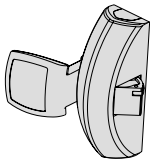	Dead-locking side latchbolt **Supplied as standard:** • Striker item 1.07072.20.0 **On request:** • Striker item 1.07072.21.0 • Outside access devices item 1.07078.35.36/38/68/69		0.900	1	**1**	**59051**	**10**	**0**	
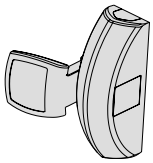	MODULAR VERSION Deadlocking side latchbolt with override option **Supplied as standard:** • Strikers item 1.07072.20.0 **Can be installed with:** • Pair of top/bottom latchbolts item 1.07063.61.0 • Pair of side latchbolts item 1.07063.51.0 • Pair of top/side latchbolts item 1.07063.66.1/2 • Pair of top/bottom deadbolts item 1.07063.71.0 **On request:** • Strike item 1.07072.21.0 • Outside access devices item 1.07078.36/38/68/69		1.020	1	**1**	**59061**	**10**	**0**	
	PVD satin-finished stainless steel treatment		1.020	1	**1**	**59061**	**10**	**0**	**C2**
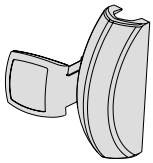	MODULAR VERSION WITHOUT CENTRAL LATCHBOLT **Can be used with:** • Pair of top/bottom latchbolts item 1.07063.61.0 • Pair of side latchbolts item 1.07063.51.0 • Pair of top/side latchbolts item 1.07063.66.1/2 • Pair of top/bottom deadbolts item 1.07063.71.0 **On request:** • Striker item 1.07072.21.0 • Outside access devices item 1.07078.36/38/68/69		0.860	1	**1**	**59066**	**10**	**0**	
	Finishes: STANDARD: painted black **On request: (only item 59061):** • Painted white (fin. 45) • Painted grey (fin. 97) • Painted stainless steel grey (fin. B9) • PVD satin-finished stainless steel treatment (fin. C2)								
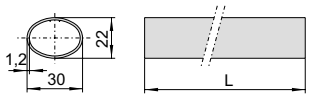	Oval steel panic bar painted red **Finishes: On request:** • Painted green (fin. 43) • Painted black (fin. 44) • Painted white (fin. 45) • Painted grey (fin. 97) • Painted stainless steel grey (fin. B9), size 13 and 14 only	900	0.800	1	**1**	**07007**	**13**	**0**	
		1200	1.054	1	**1**	**07007**	**14**	**0**	
		1500	1.352	1	**1**	**07007**	**15**	**0**	
	Oval stainless steel horizontal panic bar	900	0.800	1	**1**	**07007**	**60**	**0**	
		1200	1.070	1	**1**	**07007**	**61**	**0**	
		1500	0.900	1	**1**	**07007**	**62**	**0**	

Outside access devices for CISA FAST panic exit devices

TYPE	DESCRIPTION	UNIT WEIGHT (kg)	NO. PCS	ITEM TYPE	DIM.	HAND	FIN.	PERS.
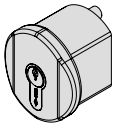	Fixed knob, centre distance 43 mm painted black The key operates the latchbolt directly Nickel-plated cylinder **Only for panic exit devices with one locking point**	0.600	1	**1 07078**	**35**	**0**		
	PVD satin-finished stainless steel treatment (fin. C2)	0.600	1	**1 07078**	**35**	**0**	**C2**	
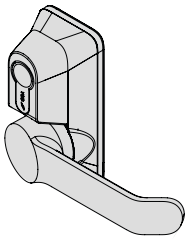	Plate with lower handle, painted black Handle is disabled with key Nickel-plated cylinder Setting to retain key in cylinder (optional)	1.100	1	**1 07078**	**36**	**0**		
	PVD satin-finished stainless steel treatment (fin. C2)	1.150	1	**1 07078**	**36**	**0**	**C2**	
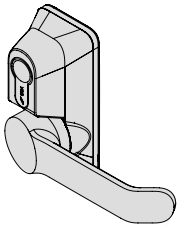	Painted black plate and handle Handle is disabled with key Nickel-plated cylinder Setting to retain key in cylinder (optional)	1.200	1	**1 07078**	**38**	**0**		
	PVD satin-finished stainless steel treatment (fin. C2)	1.200	1	**1 07078**	**38**	**0**	**C2**	
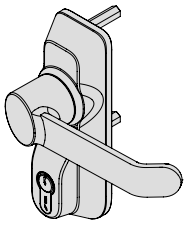	Painted black plate and handle Handle is disabled with key Nickel-plated cylinder Setting to retain key in cylinder (optional)	1.350	1	**1 07078**	**68**	**0**		
	PVD satin-finished stainless steel treatment (fin. C2)	1.350	1	**1 07078**	**68**	**0**	**C2**	
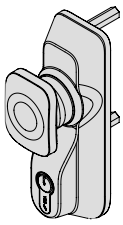	Painted black plate and handle Handle is disabled with key Nickel-plated cylinder Setting to retain key in cylinder (optional)	0.600	1	**1 07078**	**69**	**0**		
	PVD satin-finished stainless steel treatment (fin. C2)	0.600	1	**1 07078**	**69**	**0**	**C2**	

Finishes:
STANDARD: painted black

On request:
- Painted white (fin. 45)
- Painted grey (fin. 97)
- Painted stainless steel grey (fin. B9)

Outside access devices for CISA FAST panic exit devices

TYPE	DESCRIPTION	L	UNIT WEIGHT	NO. PCS	ITEM TYPE	ITEM DIM.	ITEM HAND	ITEM FIN.	ITEM PERS.
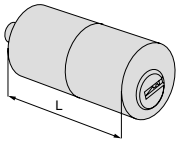	C2000 cylinder	55	0.160	1	**1 0G200**	**55**	**0**		
	C3000 cylinder	55	0.168	1	**1 0N210**	**55**	**0**		
	ASIX cylinder	50	0.170	1	**1 0E200**	**50**	**0**		
	ASTRAL cylinder	50	0.160	1	**1 0A210**	**50**	**0**		
	ASTRAL TEKNO cylinder	50	0.160	1	**0M210**	**50**	**0**		
	AP4 cylinder	55	0.215	1	**0P210**	**55**	**0**		
	RS3 cylinder	50	0.215	1	**0L210**	**50**	**0**		
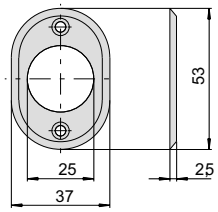	Nickel-plated protective rose for tubular cylinder		0.010	1	**1 06018**	**25**	**0**	**12**	
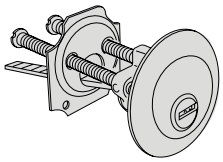	Standard round cylinder		0.180	1	**1 02550**	**25**	**0**	**12**	
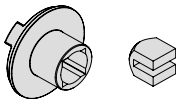	Follower with adapter for cylinder only applications		0.070	1	**1 06198**	**70**	**0**		
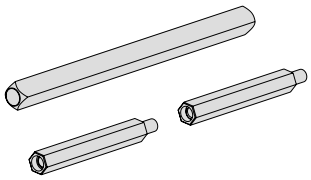	Bolt extension kit for 1.07078.36/38 versions for doors of width 80 mm to 130 mm For 1.07078.68/69 versions for doors of width 100 mm to 130 mm		0.099	1	**1 06316**	**04**	**0**		
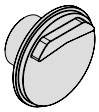	Special follower for FAST Touch devices, with outside access devices item 1.07078.36/38/68/69		0.050	1	**1 06198**	**71**	**0**		
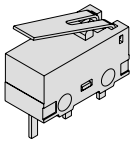	Microswitch for 1.07078.68/69 versions		0.020	1	**1 06195**	**10**	**0**		

Extended bolts for CISA FAST panic exit devices

TYPE	DESCRIPTION	UNIT WEIGHT (kg)	NO. PCS	ITEM TYPE	DIM.	HAND	FIN.	PERS.
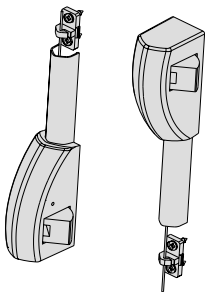	Pair of latchbolts for side locking points **Supplied as standard:** • Strikers item 1.07072.20 • 2 flexible cables • 2 cable covers • 2 connecting plates • 2 cable feedthrough hooks **On request:** • Striker item 1.07072.21.0	2.000	1	**1 07063**	**51**	**0**		
	PVD satin-finished stainless steel treatment (fin. C2)	2.100	1	**1 07063**	**51**	**0**	**C2**	
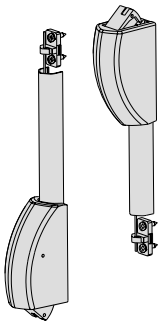	Pair of deadlocking latchbolts for top/bottom locking points **Supplied as standard:** • Top strikers item 1.07072.20.0 • Floor striker item 1.07072.27.0 • 2 flexible cables • 2 cable covers • 2 connecting plates • 2 cable feedthrough hooks **On request:** • Striker item 1.07072.21.0	2.000	1	**1 07063**	**61**	**0**		
	PVD satin-finished stainless steel treatment (fin. C2)	2.100	1	**1 07063**	**61**	**0**	**C2**	
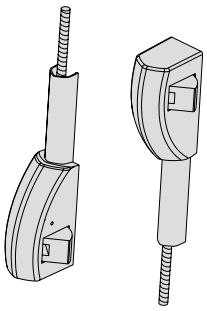	Pair of latchbolts for side locking points **Supplied as standard:** • Strikers item 1.07072.20 • 2 threaded rods • 2 rod covers • 2 connecting plates • 2 rod guide hooks **On request:** • Striker item 1.07072.21.0	1.200	1	**1 07063**	**53**	**0**		
	PVD satin-finished stainless steel treatment (fin. C2)	1.200	1	**1 07063**	**53**	**0**	**C2**	
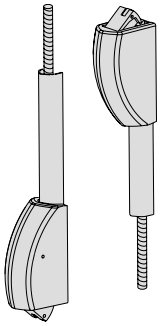	Pair of deadlocking latchbolts for top/bottom locking points **Supplied as standard:** • Top strikers item 1.07072.20.0 • Floor striker item 1.07072.27.0 • 2 threaded rods • 2 rod covers • 2 connecting plates • 2 rod guide hooks **On request:** • Striker item 1.07072.21.0	1.350	1	**1 07063**	**63**	**0**		
	PVD satin-finished stainless steel treatment (fin. C2)	1.350	1	**1 07063**	**63**	**0**	**C2**	

Extended bolts for CISA FAST panic exit devices

TYPE	DESCRIPTION	UNIT WEIGHT	NO. PCS	ITEM TYPE	DIM.	HAND	FIN.	PERS.
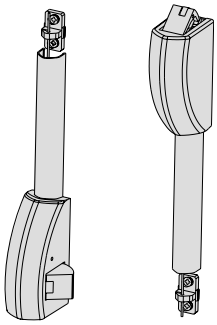	Pair of latchbolts for top deadlocking locking point and bottom side locking point **Supplied as standard:** • Strikers item 1.07072.20 • 2 flexible cables • 2 cable covers • 2 connecting plates • 2 cable feedthrough hooks **On request:** • Striker item 1.07072.21.0	1.950	1	1 07063	66	1	
		1.950	1	1 07063	66	2	
	PVD satin-finished stainless steel treatment (fin. C2)	2.100	1	1 07063	66	1	C2
		2.100	1	1 07063	66	2	C2
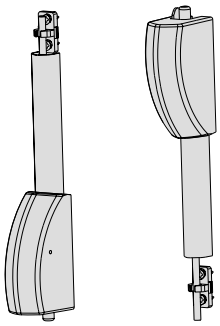	Pair of deadbolts for top/bottom locking points for swing doors **Supplied as standard:** • Top strikers item 1.07072.25.0 and item 1.07072.26.0 • Floor striker item 1.07072.25.0 • 2 threaded rods • 2 rod covers • 2 rod guide hooks • 2 connecting plates	2.000	1	1 07063	71	0	
	PVD satin-finished stainless steel treatment (fin. C2)	2.100	1	1 07063	71	0	C2
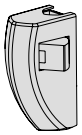	Additional side latchbolt **Supplied as standard:** • Strikers item 1.07072.20.0	0.600	1	1 07063	26	1	
		0.600	1	1 07063	26	2	
	PVD satin-finished stainless steel treatment (fin. C2)	0.600	1	1 07063	26	1	C2
		0.600	1	1 07063	26	2	C2
	Top bolt extension kit complete with: • Threaded rod • Rod cover • Rod guide hook • For doors with 3500 mm maximum height and horizontal bar 1100 mm from the floor.	0.500	1	1 07064	51	0	
	PVD satin-finished stainless steel treatment (fin. C2)	0.500	1	1 07064	51	0	C2
	Top bolt extension kit complete with: • Threaded rod • Rod cover • Rod guide hook • For doors with 3500 mm maximum height and horizontal bar 1100 mm from the floor	0.384	1	1 07064	71	0	
	PVD satin-finished stainless steel treatment (fin. C2)	0.384	1	1 07064	71	0	C2

Finishes:
• STANDARD: painted black

On request:
• Painted white (fin. 45)
• Painted grey (fin. 97)
• Painted stainless steel grey (fin. B9)

Electric strikes for panic exit devices

TYPE	DESCRIPTION	UNIT WEIGHT (kg)	NO. PCS	ITEM TYPE	DIM.	HAND	FIN.	PERS.
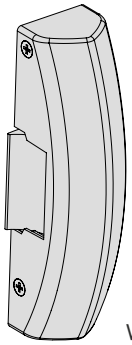 W	With limited release 12V AC - Absorbed current 0.25A	0.500	1	1	07083	05	0	
	With limited release 12 V DC - Absorbed current 0.2A	0.500	1	1	07083	06	0	
	With limited release 24 V DC - Absorbed current 0.15A	0.500	1	1	07083	07	0	
	With limited release 1 microswitch 12 V AC - Absorbed current 0.25A	0.500	1	1	07083	80	0	
	With limited release 1 microswitch 12 V DC - Absorbed current 0.2A	0.650	1	1	07083	81	0	
	With limited release 1 microswitch 24 V DC - Absorbed current 0.15A	0.500	1	1	07083	82	0	
	With permanent release 12 V AC - Absorbed current 0.25A	0.628	1	1	07083	90	0	
	With energised coils 12 V DC - Absorbed current 0.2A	0.634	1	1	07083	40	0	
	With energised coils 24 V DC - Absorbed current 0.15A	0.500	1	1	07083	41	0	
	Finishes: STANDARD: painted black **On request:** • Painted white (fin. 45) • Painted grey (fin. 97) • Painted stainless steel grey (fin. B9) • PVD satin-finished stainless steel treatment (fin. C2)							
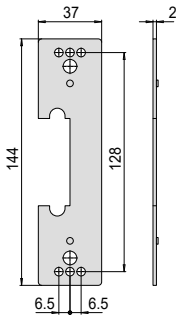	2 mm strike spacer Black nylon	0.020	1	1	07089	12	0	

Electric handle for panic exit devices

TYPE	DESCRIPTION		UNIT WEIGHT	NO. PCS	ITEM TYPE	DIM.	HAND	FIN.	PERS.
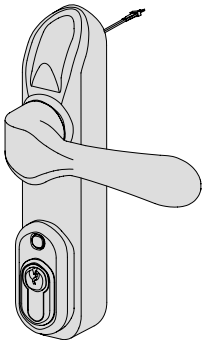	Electrically operated handle Can be installed with panic exit devices from the FAST and CISA Prestige series Painted black **Supplied as standard:** • Booster accessory item 1.07022.01.0 • Connecting cable • Fixing screws **On request:** • Timer item 1.07022.20.0 **Finishes:** STANDARD: painted black **On request:** Painted grey (fin. 97)		1.200	1	**1 07074**	**80**	**0**		

Glass kit for installation of FAST panic exit devices on glass doors

TYPE	DESCRIPTION	FOR ITEMS/SERIES	UNIT WEIGHT (kg)	NO. PCS	ITEM TYPE	ITEM DIM.	ITEM HAND	ITEM FIN.	ITEM PERS.
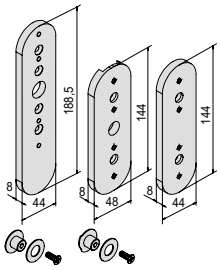	Glass kit for FAST panic exit devices Painted black	59001 59011 59016	1.330	1	1	07090	01	0	
	Glass kit for FAST panic exit devices PVD satin-finished stainless steel treatment		1.330	1	1	07090	01	0	C2
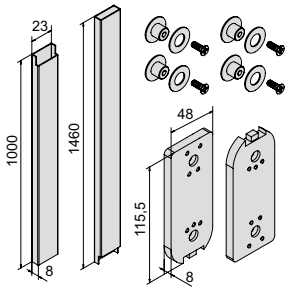	Glass kit for additional locking points for FAST panic exit devices Painted black	1.07063.51.0 1.07063.61.0 1.07063.66.1.2 1.07063.71.0	2.500	1	1	07090	10	0	
	Glass kit for additional locking points for FAST panic exit devices PVD satin-finished stainless steel treatment		2.500	1	1	07090	10	0	C2
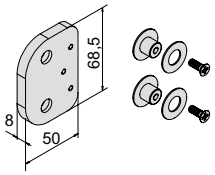	Glass kit for side striker for FAST panic exit devices Painted black	59001 59011 1.07063.51.0	0.254	1	1	07091	01	0	
	Glass kit for side striker for FAST panic exit devices PVD satin-finished stainless steel treatment		0.254	1	1	07091	01	0	C2
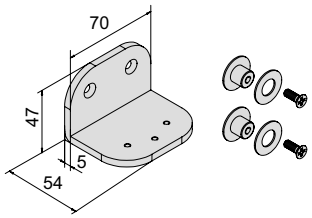	Glass kit for top striker, latchbolt version For additional locking points for FAST panic exit devices Painted black	1.07063.61.0	0.286	1	1	07091	02	0	
	Glass kit for top striker, latchbolt version For additional locking points for FAST panic exit devices PVD satin-finished stainless steel treatment		0.286	1	1	07091	02	0	C2
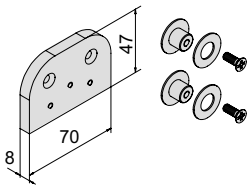	Glass kit for top striker, deadbolt version For additional locking points for FAST panic exit devices Painted black	1.07063.71.0	0.240	1	1	07091	03	0	
	Glass kit for top striker, deadbolt version For additional locking points for FAST panic exit devices PVD satin-finished stainless steel treatment		0.240	1	1	07091	03	0	C2

Adjustable strikers for FAST panic exit devices

TYPE	DESCRIPTION	UNIT WEIGHT (kg)	NO. PCS	ITEM TYPE	DIM.	HAND	FIN.	PERS.
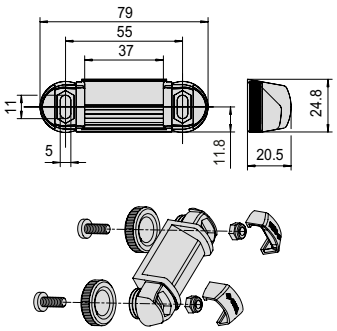	Adjustable striker for aluminium doors **Adjustments:** • Flush compensation from - 8 mm to + 4 mm **Supplied as standard:** • Fixing screws **Finishes:** • STANDARD: painted black **On request:** • Painted white (fin. 45) • Painted grey (fin. 97)	0.141	1	1	07072	31	0	
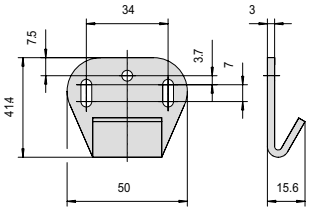	Striker for factory doors/gates **Adjustments:** • Leaf to frame clearance compensation up to 25 mm • Flush compensation from - 4 mm to + 7 mm **Supplied as standard:** Fixing screws **Finishes:** • STANDARD: painted black **On request:** • Painted white (fin. 45) • Painted grey (fin. 97)	0.080	1	1	07072	32	0	
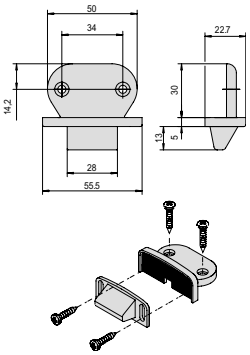	Striker for wood and PVC doors **Adjustments:** • Cantilevered installation option on profiles with 14 to 24 mm overlap **Supplied as standard:** • Fixing screws **Finishes:** • STANDARD: painted black **On request:** • Painted white (fin. 45) • Painted grey (fin. 97)	0.080	1	1	07072	33	0	
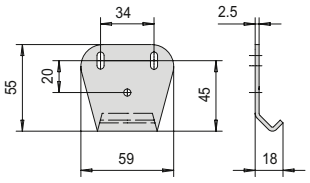	Side/top steel striker for PVC doors Finish: painted black	0.080	1	1	07072	34	0	

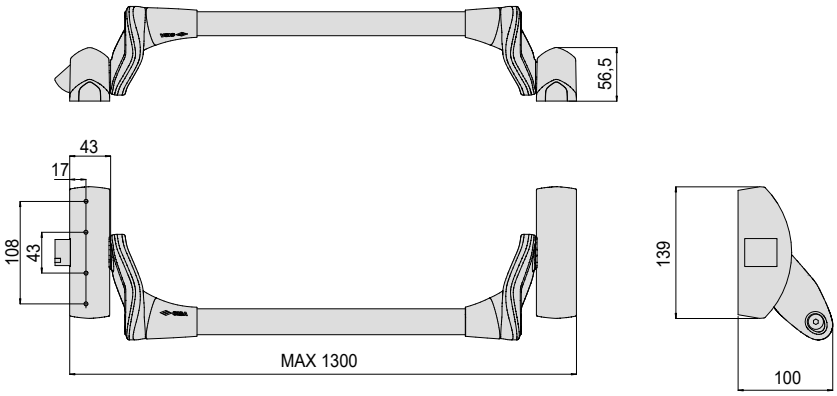

59001, 59011, 59014 ,59016

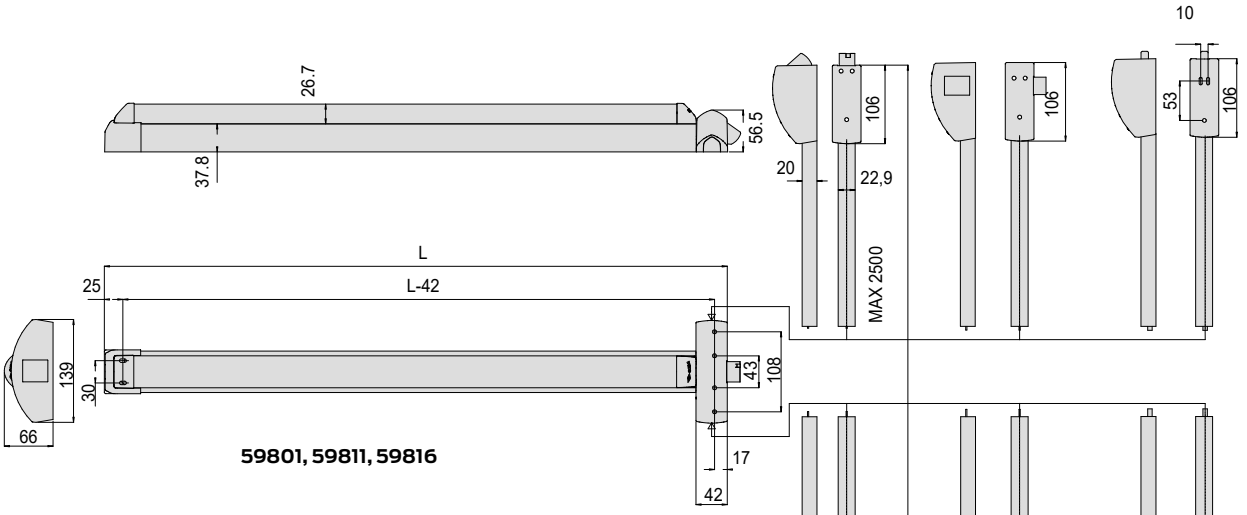

59801, 59811, 59816

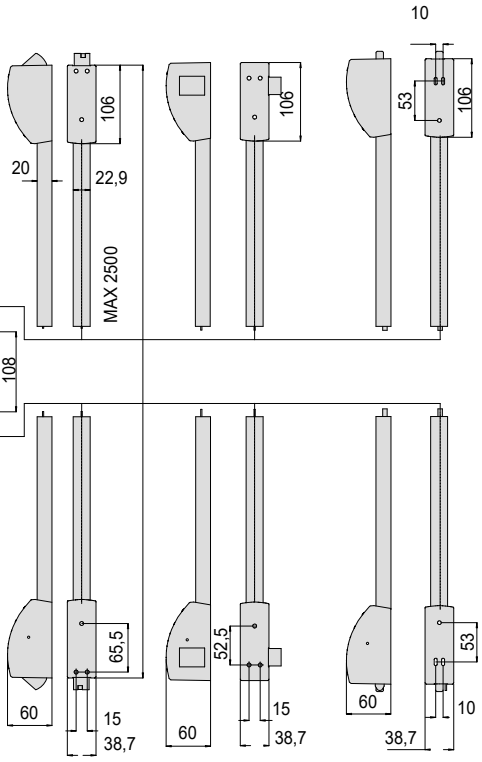

07063-51/53/61/63/66/71

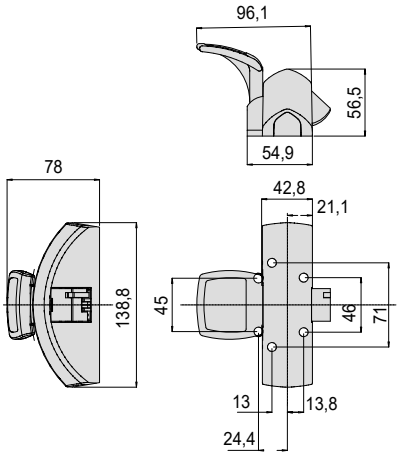

59051, 59061, 59066

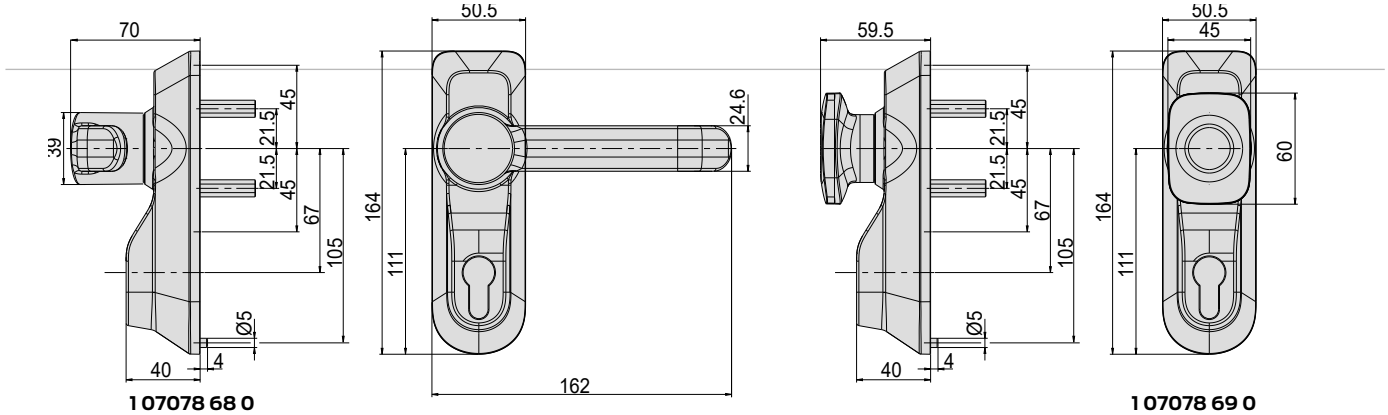

1 07078 68 0

1 07078 69 0

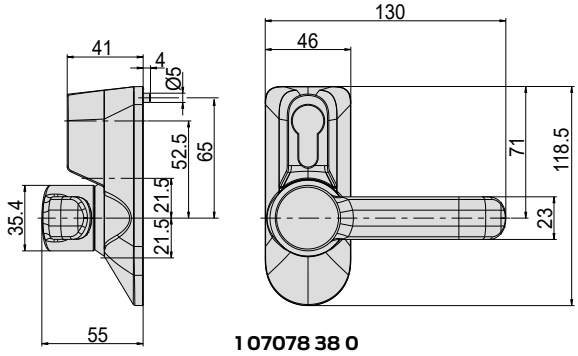

1 07078 38 0

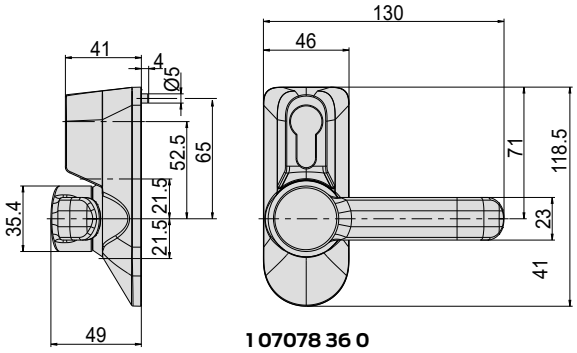

1 07078 36 0

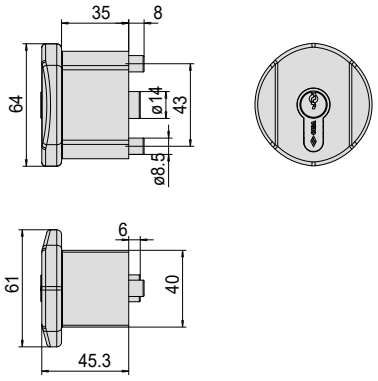

1 07078 35 0

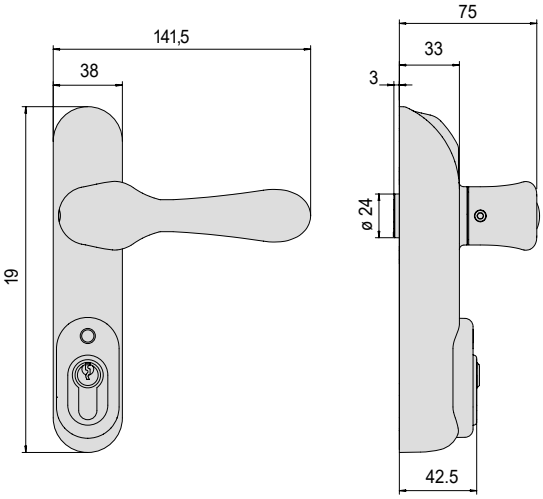

1 07074 80 0

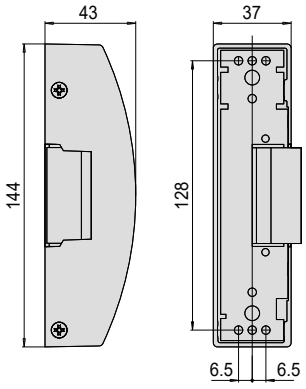

07083

CISA S.p.A. reserves the right to make any change to the products illustrated in this catalogue without prior notice.

About Allegion

Allegion (NYSE: ALLE) is a global pioneer in seamless access, with leading brands like CISA®, Interflex®, LCN®, Schlage®, SimonsVoss® and Von Duprin®. Focusing on security around the door and adjacent areas, Allegion secures people and assets with a range of solutions for homes, businesses, schools and institutions.

For more, visit **allegion.com**.

AXA ■ BRICARD ■ Briton ■ CISA ■ interflex
KRYPTONITE ■ NORMBAU ■ SimonsVoss technologies ■ TRELOCK

CISA SpA
Via Oberdan 42
48018 Faenza (RA) Italy

Ph. +39 0546 677111
Fax +39 0546 677150

Customer Service and Technical Support
+39 0546 188 0070

cisa.com
cisa.sales@allegion.com

ALLEGION

© 2022 Allegion - CISA PDE644 Rev. 1/22