JUVARRA BRUNELLESCHI

New range of panic bars.
All-round safety.

2,000,000 tested cycles
Antibacterial protection
Compact design

CE and NF certificates

New panic bars: Juvarra and Brunelleschi.

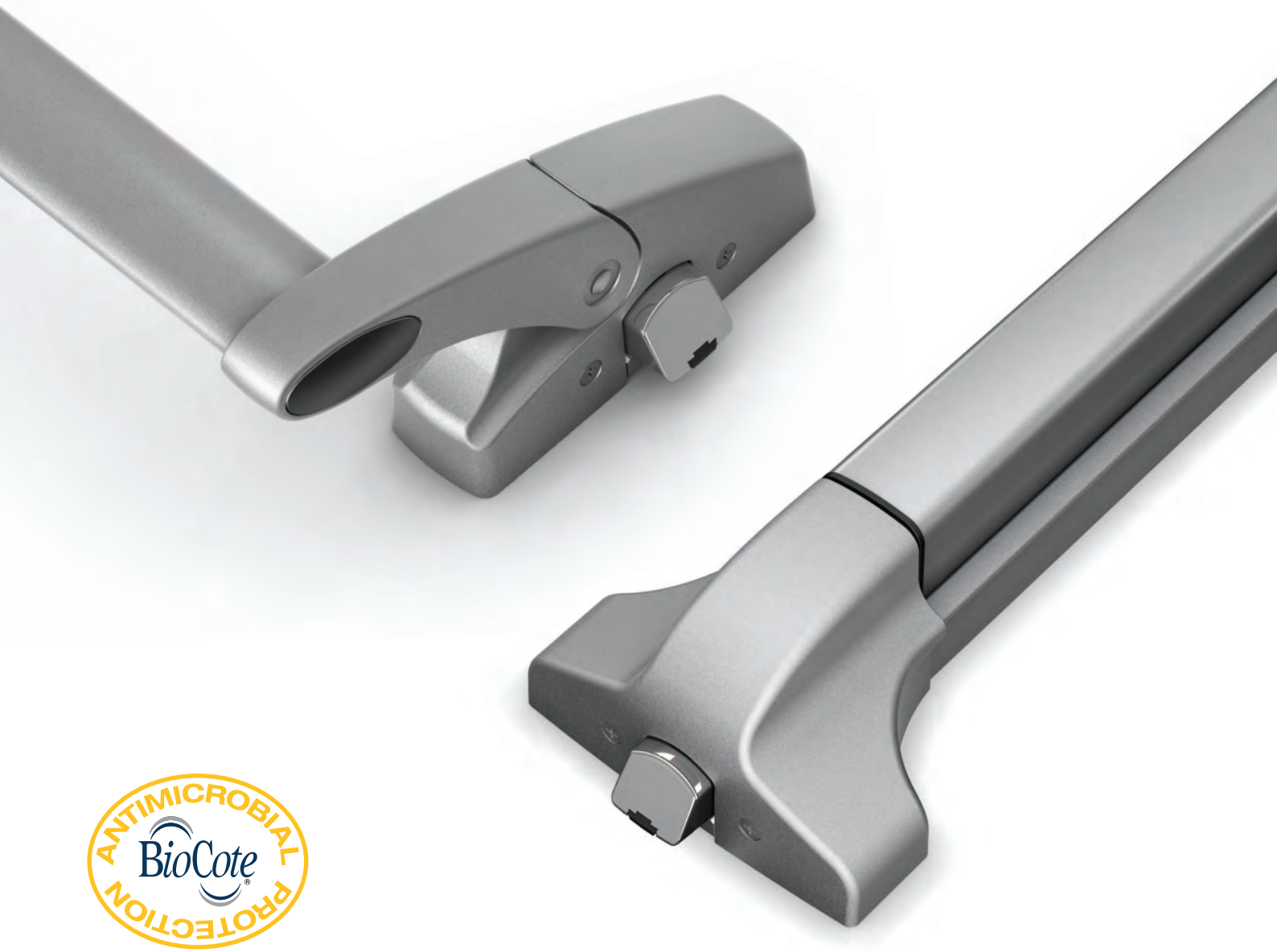

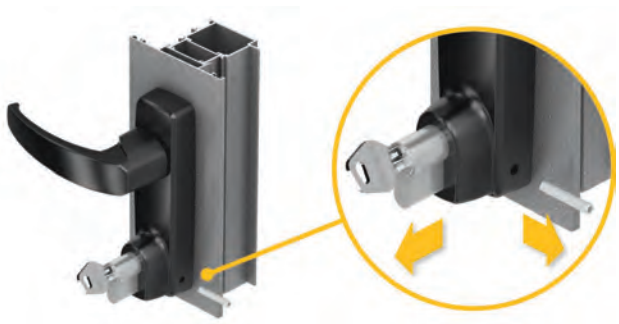

Replacing the cylinder has never been simpler

With Juvarra and Brunelleschi, you can replace the cylinder without having to disassemble the internal part of the panic bar. A very useful innovation in case of solutions with master key or other special organization chart solution. Its convenience is even clearer in case of large worksites, when the cylinder supplied as standard equipment is replaced with the permanent cylinder once the work is delivered: this operation is so simple that even the client can do it. Juvarra, the problem-free panic bar.

All-round safety.

Certified durability
Juvarra and Brunelleschi have been tested at the highest level required by standard EN 1125:2008 (200,000 cycles), and they have brilliantly passed the 2,000,000-cycle test.

Anti-burglar security
Savio wanted to improve security even further: the special shape of the latch offers greater resistance against burglary attempts.

Opening safety: double leaf
Translating plate latch: this is the only solution that completely eliminates any jamming during the opening phase when using two leaves. Moreover, the manoeuvring strain is extremely reduced thanks to the self-lubricating nylon insert.

Extremely simple cylinder replacement
The new panic bars allow the cylinder to be replaced without having to disassemble the internal part of the panic bar. A very useful innovation in case of solutions with master key or other special organization chart solution. Replacing the cylinder supplied as standard equipment with the permanent one is so simple that it can also be done by the final user.

Functional and sober design
The particularly compact design of the new range of panic bars combines pleasant sobriety and excellent functionally.

Antibacterial safety
Savio's safety also extends to hygiene, thanks to the antibacterial treatment that uses extremely high-quality paints, crucial in public places such as schools, hospitals and offices.
In order to offer the best that is currently available in this field, Savio has chosen **Biocote®**, international leader in anti-microbial and antibacterial technologies.

Antibacterial safety.

The safety of Savio's Juvarra and Brunelleschi also extends to hygiene, thanks to the antibacterial treatment that uses extremely high-quality paints, crucial in public places such as schools, hospitals and offices.

To offer the best that is currently available in this field, Savio has chosen Biocote®, international leader in antimicrobial and antibacterial technologies.

ANTIBACTERIAL PROTECTION
SILVER ION TECHNOLOGY

BioCote® was founded in 1994 with the aim of developing patented coatings using antimicrobial/antibacterial powder. In just a few years, BioCote® has become an international supplier of cutting-edge antimicrobial solutions.

The additives made by BioCote® are listed in the European Directive on biocide products and have been tested according to ISO standards.

BioCote® s' technology in action.

The technology developed by BioCote® protects products for a long time, creating a surface on which microbes cannot survive.

BioCote® effects.

The BioCote® silver ions technology is incorporated in the product as an additive during the production phase, not applied as a coating after production.

Once they are incorporated, antimicrobial additives offer full and continuous protection for the entire service life of the product.

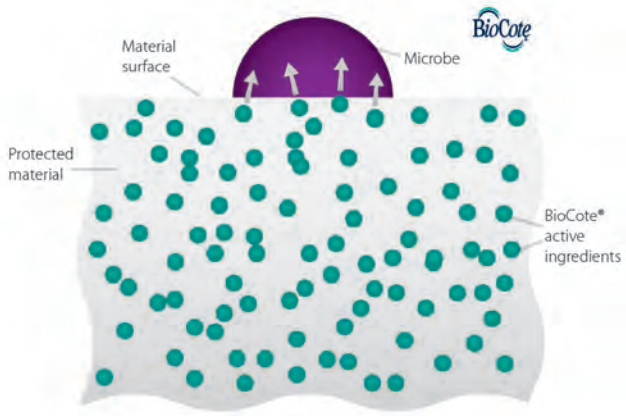

On the surface of material treated with the BioCote® additives, the silver ions bind with microbes that come in contact with the surface, damaging them beyond repair, hindering the proper functionality of their cells, making it impossible for them to reproduce and finally causing them to die.

99,9% of bacteria reduced in 2 hours

On a product treated with the BioCote® silver ions technology, the level of bacteria has been shown to be reduced by **99,9%**.

BioCote® products are regularly validated and checked in compliance with standard ISO 22196:2011 by an independent laboratory.

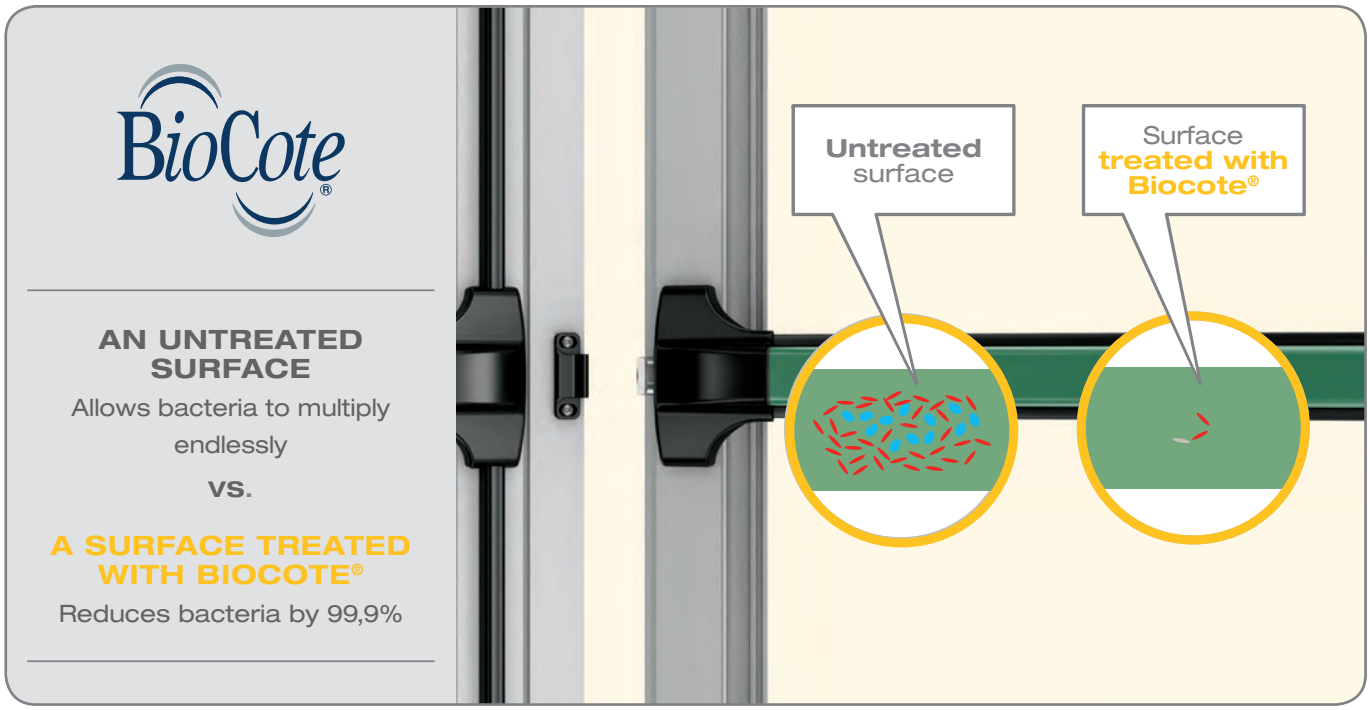

Why is it important to eliminate the presence of microbes on a surface?

We are surrounded by microbes and, fortunately, most of them are harmless. Some microbes, however, may have a harmful impact on our health and on the environment where we live and work. By contrasting the negative impact that microbes may have on the surface of a product, the BioCote® technology adds value in several ways.
The technology developed by BioCote®:

- Improves the hygienic conditions of a product, if it is able to host microbes that can be harmful to man's heath
- Keeps a product fresher for a longer time, if it able to host microbes that cause foul odours or stains
- It extends the life of a product, if it hosts microbes that can damage its surface.

The advantages of silver ions technology:

The most important advantage of antimicrobial additives, aside from the protection that they offer, is the fact that they do not alter the products to which they are added.

The BioCote® antimicrobial additives:

- do not change the appearance of the products
- have no adverse impact on their performance
- are not subject to wear and are not eliminated through rinsing
- do not seep through the surface of the treated products.

Through additional tests allowed by standard EN 1125:2008, we have tested the accessories of our
JUVARRA and BRUNELLESCHI range, at the **CETIM laboratory in France**, for applications **up to 1500 mm in width and up to 3100 mm** in height, and have obtained the validation and addition of these codes to the **CE Certificate of Conformity** (6010.B/1500, 6010.721 and 6110.B /1158, 6010.721).

Tested up to **2,000,000** cycles

After reaching 200,000 cycles (the maximum level set by the standard), the test continued up to **2,000,000 cycles**, as declared in the relevant AFNOR CERTIFICATION.

Guarantee of perfect **operation over time**.
Ideal for **high-traffic doors**.

JUVARRA and BRUNELLESCHI

JUVARRA and BRUNELLESCHI were tested based on standard EN 1125:2008, according to the certificates issued in compliance with Regulation (EU) on Construction Products 305/2011 of the European Parliament and Council of 9th March 2011, by the French certification institute AFNOR, which is authorized at the European level to grant use of the EC mark on construction products. Its identification number is 0333.

The various obtainable levels:

(in bold the levels obtained by JUVARRA)

3 7 7 0 1 4 2 2 A A

Category of use:
Grade 3: high frequency of use by public

Durability:
Grade 6: 100,000 opening/closing cycles
Grade 7: 200,000 opening/closing cycles

Max. door weight:
Grade 6: up to 200 kg
Grade 7: over 200 kg

Suited for application on fire-resistant doors:
Grade 0: not suited
Grade B: suited for fire-resistant doors

Security:
Grade 1: the panic bar is safe for users

Field of application of the door:
Category A: one-leaf door, two-leaf door: active or passive leaf;
Category B: only one-leaf door;
Category C: two-leaf door, passive leaf only

Type of bar operation:
Type A = panic device with push-bar operation
Type B = panic device with touch-bar operation

Bar height with respect to door surface:
Grade 1 = up to 150 mm
Grade 2 = up to 100 mm

Anti-burglar safety:
Grade 2: ensures proper Grade of anti-burglar security without impairing operation of the panic device

Corrosion resistance:
Grade 3: high resistance (96 hours in salt spray)
Grade 4: very high resistance (240 hours in salt spray)

The tests were conducted at the prestigious CETIM Institute in S. Etienne (France).
The products listed in the certificate ensure a high number of utilization cycles (200,000 cycles) that allow frequent use. This cyclic performance was achieved on a door weight of 300 kg. This data, combined with other important elements that make it possible to evaluate the performance level of the product, is provided here below.

The various obtainable levels:
(in bold levels obtained by BRUNELLESCHI)

3 7 7 0 1 4 2 2 B A

Category of use
Grade 3: high frequency of use by public

Durability
Grade 6: 100.000 opening/closing cycles
Grade 7: 200,000 opening closing cycles

Max. door weight:
Grade 6: up to 200kg
Grade 7: up to 200kg

Suitable for application on fire resistant doors
Grade 0 : not suited
Grade B: suited for fire resistant doors

Security
Grade 1: the panic bar is safe for users

Corrosion resistance:
Grade 3: high resistance (96 hours in salt spray)
Grade 4: very high resistance (240 hours in salt spray)

Anti—burglar safety:
Grade 2: ensures proper grade of anti-burglar security without impairing operation of the panic device

Bar height with respect to floor surface:
Grade 1 = up to 150mm
Grade 2 = up to 100 mm

Type of bar operation:
Type A= panic device with push-bar operation
Type B = panic device with touch-bar operation

Field of application of the door
Category A: 1 leaf door, 2 leaf door: active or passive leaf;
Category B: only 1 leaf door
Category C: 2 leaf door, passive leaf only

JUVARRA panic bar

6010.1/1200

Horizontal non-handed panic bar
with 1 closing point.

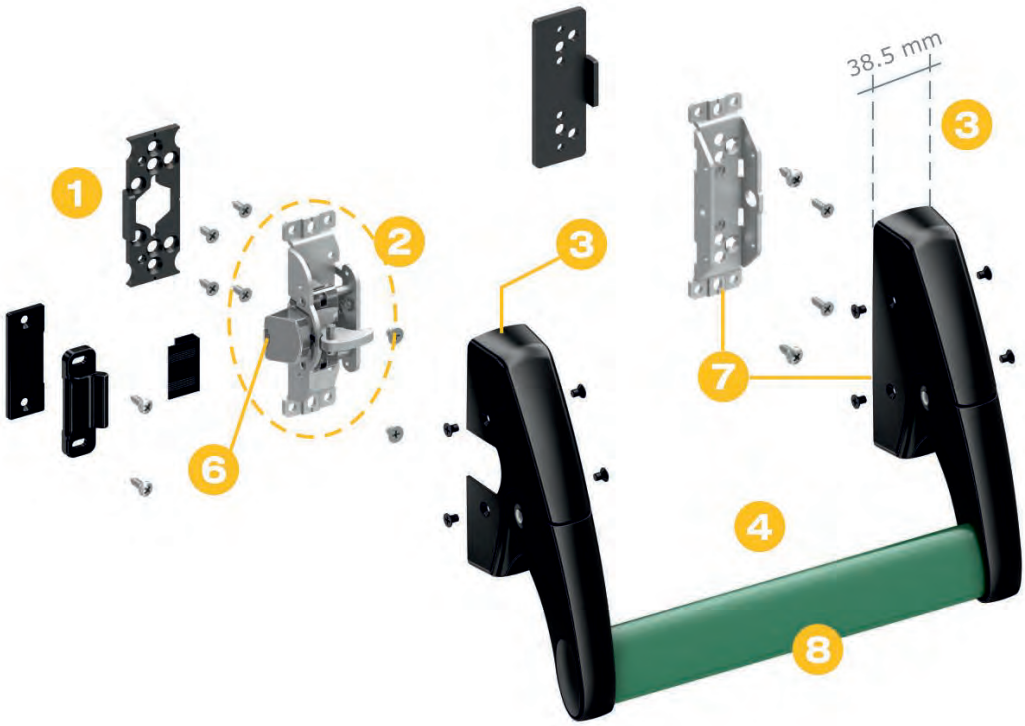

6010.2/1200

Vertical non-handed panic bar
with 2 closing points.

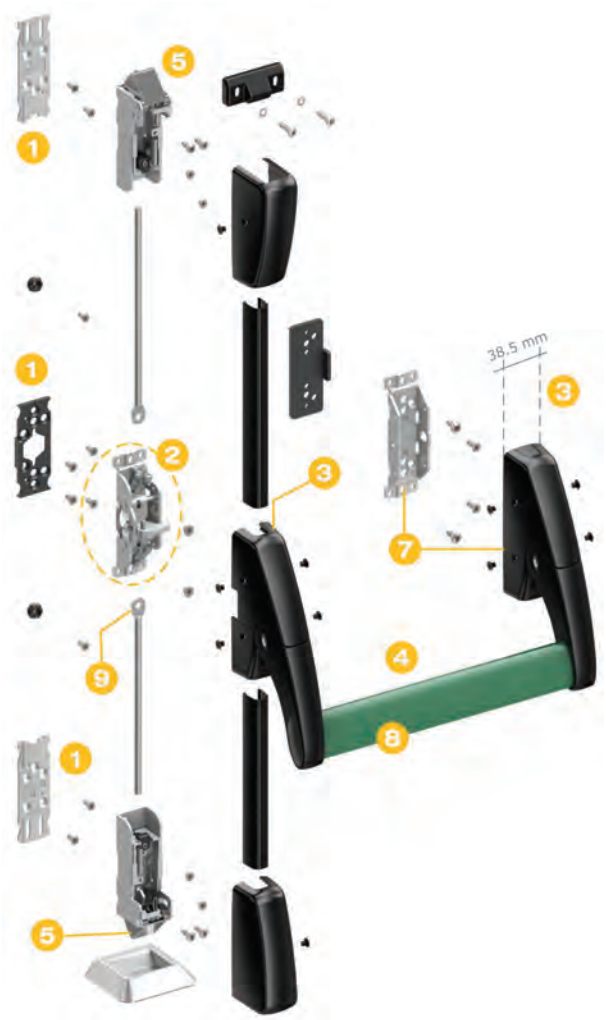

1. All supports and latches are screwed onto steel **counterplates** (which can also be welded) for **easy, solid and fast fixing**
2. **Completely non-handed mechanism**
3. Reduced overall dimensions (**38.5 mm**) for assembly to standard profiles too
4. Horizontal bars with side profiles for **better manoeuvrability**
5. **Adjustable** high and low latches, with **anti-burglar device**
6. **Flat and translating side latches** (top, bottom, middle)
7. Secondary support pre-set for fitting the **dogging mechanism and the microswitch**
8. Horizontal bar to be inserted with **wide machining tolerances**, made of steel with 40-mm oval cross-section
9. **Simplified rod coupling**

6010.3/1200

Vertical non-handed panic bar
with side closings
and 3 closing points.

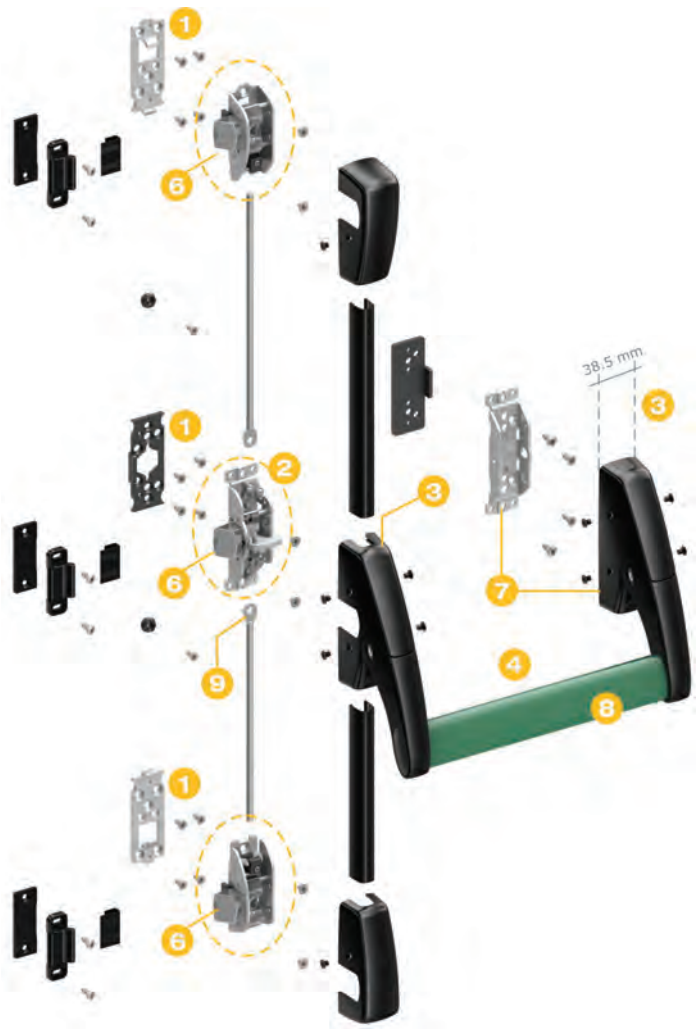

BRUNELLESCHI panic push bar

6110.1/840

Horizontal, non-handed
panic bar with 1 closing point.

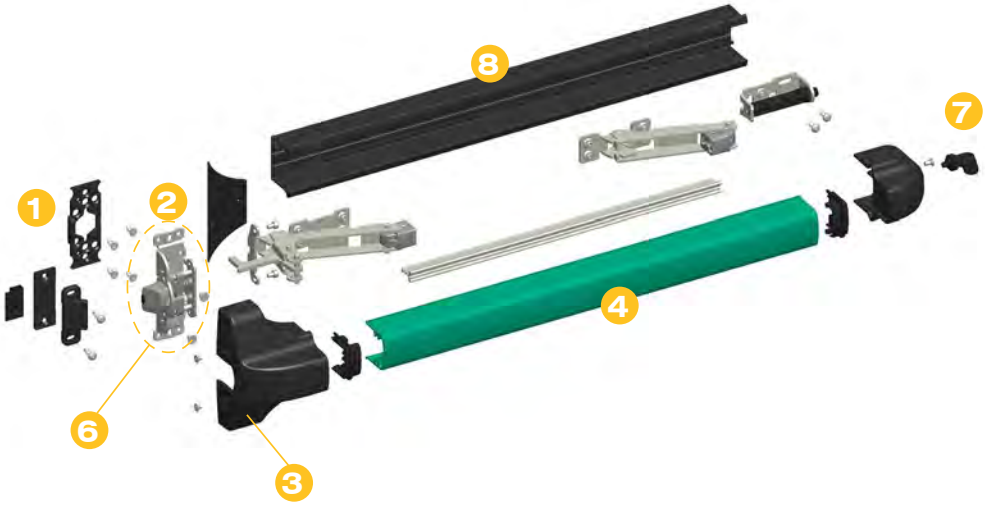

6110.2/840

Vertical, non-handed
panic bar with 2 closing points.

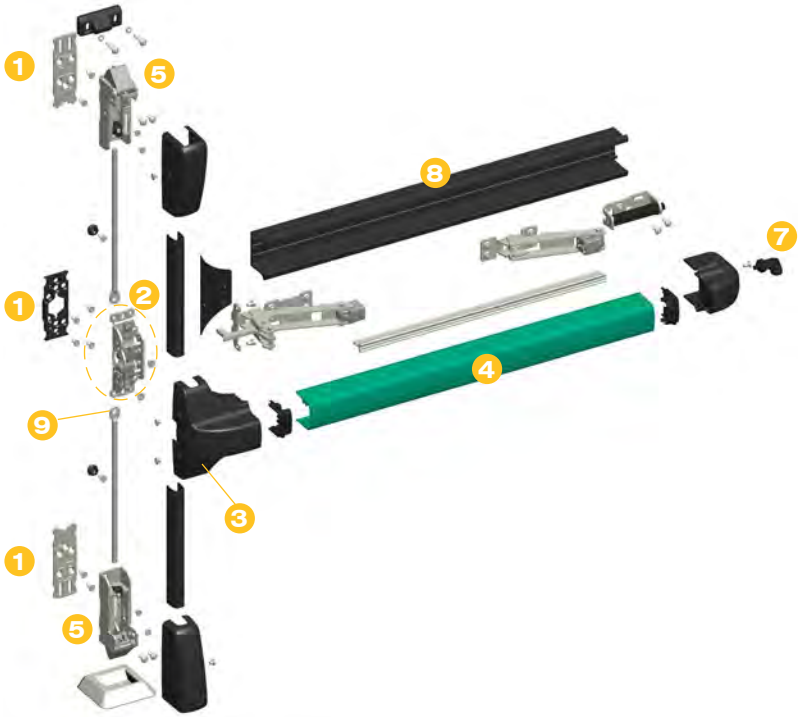

6110.3/840

Vertical, non-handed
panic bar with side closings
and 3 closing points.

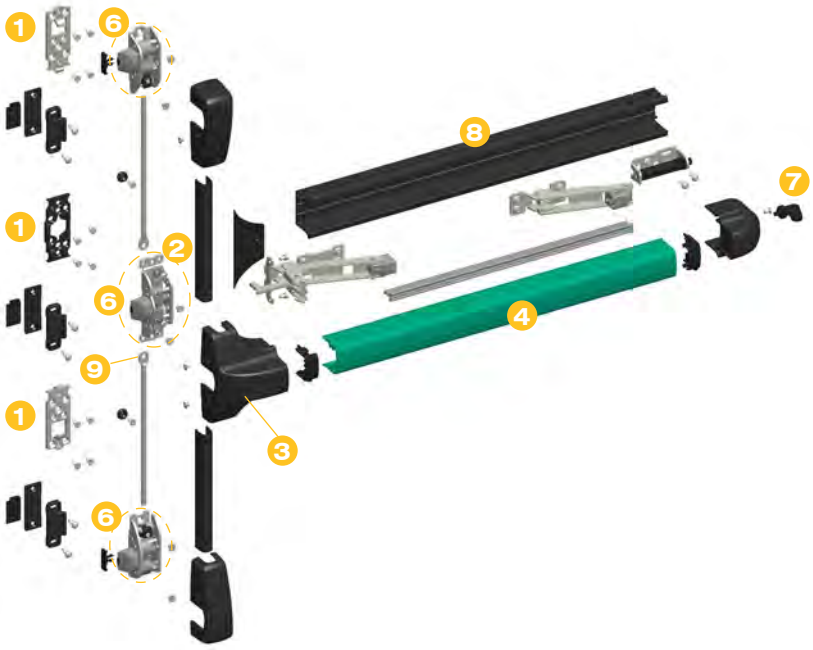

1. All supports and latches are screwed onto steel **counterplates** (which can also be welded) for easy, **solid and fast fixing.**
2. **Completely non-handed mechanism.**
3. Reduced overall dimensions (**38.5 mm**) for assembly to standard profiles too.
4. **BioCote® anti-bacterial protections** with silver ions.
5. Adjustable high and low latches, **with anti-burglar device**
6. Lateral **latches** (high, low and central) **flat and sliding**
7. **Latch retainer device** standard
8. Base profile with special shape for optimum grasping of bar
9. **Simplified rod coupling**

Double leaf.

Translating plate latch:
the only solution that completely eliminates any jamming during the opening phase when using two leaves. Moreover, the manoeuvring strain is extremely reduced thanks to the self-lubricating nylon insert

Complete kits

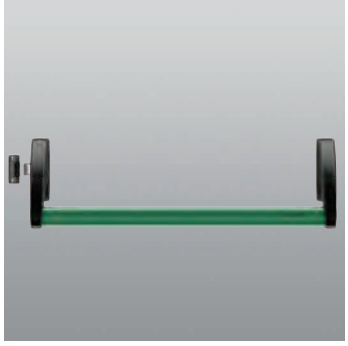

Article	Description	Pcs.	Finishes
6010.1/1200	JUVARRA (patented) Horizontal non-handed panic bar with 1 locking point, push-bar version, in zamak and galvanised steel. Complete with: latch bolt in nickel plated zamak, 1 counterplate in galvanised steel and 1 counterplate in nylon, 1200 mm bar and 2 keepers in painted zamak, 4 countersunk head screws Ø 4.2x13, 2 cap screws 4.2x13, 2 cap screws 4.8x13, 2 countersunk head screws Ø 4.2x16, 2 countersunk head screws M5x6 and 8 countersunk head screws M4x5 in galvanised steel. For doors with a clear width of 800 to 1240 mm and a max. height of 2450 mm.	1	301, 629, GREY *(for description see the legend on page 23)*
6010.99/120	Like 6010.1/1200 but with supports and bar in the same finish.	1	905, 910, GREY, SLV

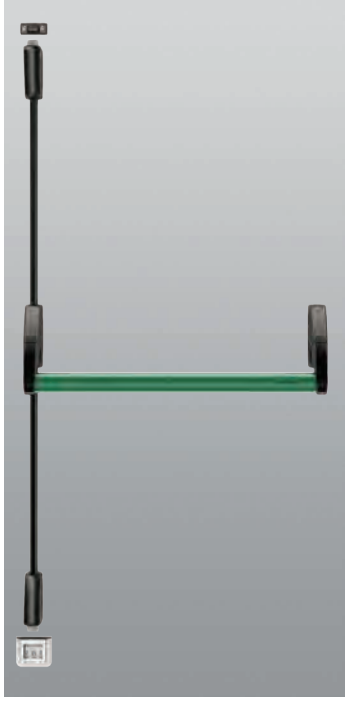

Article	Description	Pcs.	Finishes
6010.2/1200	JUVARRA (patented) Vertical rod non-handed panic bar with 2 locking points, push-bar version, in zamak and galvanised steel. Complete with: 3 counterplates in galvanised steel and 1 counterplate in nylon, 1200 mm bar and 1 keeper in painted steel, 1 floor-mounted keeper in stainless steel, 1 black nylon insert, 1 top rod + 1 bottom rod in aluminium, 1 rod cover of 1449 mm and 1 rod cover of 1037 mm in painted aluminium, 2 adjustable plugs in black galvanised zamak, 2 countersunk head screws Ø 4.2x16, 10 countersunk head screws Ø 4.2x13, 4 cap screws Ø 4.2x13, 2 cap screws Ø 4.2x19, 2 cap screws 4.8x13, 2 countersunk head screws M5x6 and 14 countersunk head screws M4x5 in galvanised steel. For doors with a clear width of 800 to 1240 mm and a max. height of 2450 mm.	1	301, 629, GREY *(for description see the legend on page 23)*
6010.98/120	Like 6010.2/1200 but with supports, covers and bar in the same finish.	1	905, 910, GREY, SLV

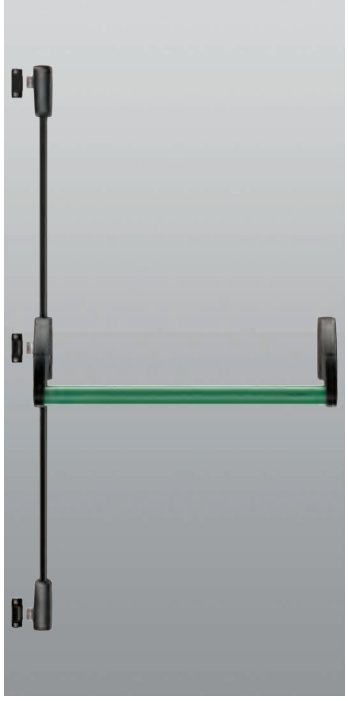

Article	Description	Pcs.	Finishes
6010.3/1200	JUVARRA (patented) Vertical rod non-handed panic bar with 3 locking points, push-bar version, in zamak and galvanized steel. Complete with: latch bolt in nickel plated zamak, 3 counterplates in galvanised steel and 1 counterplate in nylon, 1200 mm bar and 6 keepers in painted zamak, 1 top rod + 1 bottom rod in aluminium, 1 1340 mm rod cover and 1 1037 mm rod cover in painted aluminium, 2 adjustable plugs in black galvanised zamak, 2 countersunk head screws Ø 4.2x16, 14 countersunk head screws Ø 4.2x13, 6 cap screws Ø 4.2x13, 2 cap screws 4.8x13, 6 countersunk head screws M5x6 and 10 countersunk head screws M4x5 in galvanised steel. For doors with a clear width of 800 to 1240 mm and a max. height of 2450 mm.	1	301, 629, GREY *(for description see the legend on page 23)*
6010.97/120	Like 6010.3/1200 but with supports, covers and bar in the same finish.	1	905, 910, GREY, SLV

Complete kits

Article	Description	Pcs.	Finishes
6110.1/840	BRUNELLESCHI (patented) Complete horizontal non-handed panic bar with 1 locking point, touch-bar type, in zamak and galvanised steel. Complete with: latch bolt in nickel plated zamak, 1 counterplate in white galvanised steel, 698 mm bar and 1 723 mm base profile in painted aluminium, 1 573 mm connecting rod in aluminium, 2 keepers in painted zamak, 4 countersunk head screws Ø 4.2x13, 4 cap screws 4.2x13, 2 socket head cap screws M5x6, 2 countersunk head screws M5x6, 1 countersunk head screw M4x8 and 2 countersunk head screws M4x5 in galvanised steel. For doors with a clear width of 437 to 860 mm and a max. height of 2450 mm.	1	301, 629 *(for description see the legend on page 23)*

Article	Description	Pcs.	Finishes
6110.2/840	BRUNELLESCHI (patented) Complete vertical non-handed panic bar with 2 locking points, touch-bar type, in zamak and galvanised steel. Complete with: fixation counterplates in white galvanised steel, 698 mm bar and 1 723 mm base profile in painted aluminium, 1 573 mm connecting rod in aluminium, 1 top rod + 1 bottom rod in aluminium, 1 rod cover of 1449 mm and 1 rod cover of 1037 mm in painted aluminium, 2 adjustable plugs in black galvanised zamak, 2 keepers in painted zamak, 1 keeper in painted steel, 1 floor-mounted keeper in stainless steel, 1 black nylon insert, 10 countersunk head screws Ø 4.2x13, 6 cap screws 4.2x13, 2 cap screws Ø 4.2x19, 2 socket head cap screws M5x6, 2 countersunk head screws M5x6, 1 countersunk head screw M4x8 and 8 countersunk head screws M4x5 in galvanised steel. For doors with a clear width of 437 to 860 mm and a max. height of 2450 mm.	1	301, 629 *(for description see the legend on page 23)*

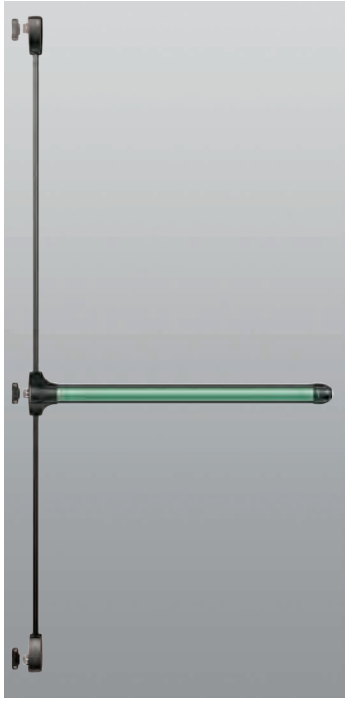

Article	Description	Pcs.	Finishes
6110.3/840	BRUNELLESCHI (patented) Complete vertical non-handed panic bar with 3 locking points, touch-bar type, in zamak and galvanised steel. Complete with: latch bolt in nickel plated zamak, fixation counterplates in white stainless steel, 698 mm bar and 1 723 mm base profile in painted aluminium, 1 573 mm connecting rod in aluminium, 1 top rod + 1 bottom rod in aluminium, 1 rod cover of 1449 mm and 1 rod cover of 1037 mm in painted aluminium, 2 adjustable plugs in black galvanised zamak, 6 keepers in painted zamak, 14 countersunk head screws Ø 4.2x13, 8 cap screws 4.2x13, 2 socket head cap screws M5x6, 6 countersunk head screws M5x6, 1 countersunk head screw M4x8 and 4 countersunk head screws M4x5 in galvanised steel. For doors with a clear width of 437 to 860 mm and a max. height of 2450 mm.	1	301, 629 *(for description see the legend on page 23)*

Modular items

Article	Description	Pcs.	Finishes
6010.701	JUVARRA (patented) Kit with horizontal non-handed supports, 1 locking point, push-bar version, in painted zamak and galvanised steel. Complete with: latch bolt in nickel plated zamak, 1 counterplate in galvanised steel and 1 counterplate in nylon, 2 keepers in painted zamak, right and left nylon bar caps, 2 countersunk head screws 4.2x16, 4 countersunk head screws 4.2x13, 2 cap screws 4.2x13, 2 cap screws 4.8x13, 8 countersunk head screws M4x5 and 2 countersunk head screws M5x6 in galvanised steel (GREY: 2 cap screws 4.2x13 in galvanised steel and 8 countersunk head screws M4x6 in stainless steel).	1	905, 910, SLV, GREY *(for description see the legend on page 23)*

Article	Description	Pcs.	Finishes
6010.702	JUVARRA (patented) Kit with non-handed vertical supports, 2 locking points, push-bar version, in painted zamak and galvanised steel. Complete with: 1 galvanised steel counterplate and 1 nylon counterplate, right and left nylon bar caps, 8 countersunk head screws Ø 4x5, 2 countersunk head screws M5x6, 4 countersunk head screws 4.2x13, 2 countersunk head screws 4.2x16 and 2 cap screws 4.8x13 in galvanised steel (GREY: 8 countersunk head screws M4x6 in stainless steel).	1	905, 910, SLV, GREY *(for description see the legend on page 23)*

Article	Description	Pcs.	Finishes
6010.703	JUVARRA (patented) Kit with non-handed supports, 3 locking points, push-bar version, in painted zamak and galvanised steel. Complete with: latch bolt in nickel plated zamak, 1 counterplate in galvanised steel and 1 counterplate in nylon, 2 keepers in painted zamak, right and left nylon bar caps, latch bolt cap and 4 caps in painted zamak, 2 countersunk head screws 4.2x16, 4 countersunk head screws 4.2x13, 2 cap screws 4.2x13, 2 cap screws 4.8x13, 8 countersunk head screws M4x5 and 2 countersunk head screws M5x6 in galvanised steel (GREY: 2 cap screws 4.2x13 in galvanised steel and 8 countersunk head screws M4x6 in stainless steel).	1	905, 910, SLV, GREY *(for description see the legend on page 23)*

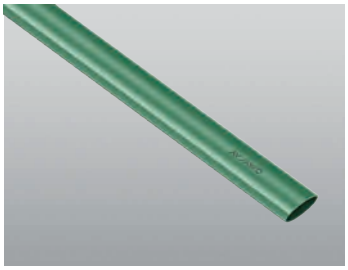

Article	Description	Pcs.	Finishes
6010.B/860	Horizontal 860 mm bar in painted or stainless steel. For doors with leaf up to 900 mm.	1	301, 629, 905, 910, SLV, GREY, S *(for description see the legend on page 23)*
6010.B/1200	Horizontal 1200 mm bar in painted or stainless steel. For doors with leaf up to 1240 mm.	1	
6010.B/1500	Horizontal 1500 mm bar in painted or stainless steel. For doors with leaf up to 1540 mm.	1	

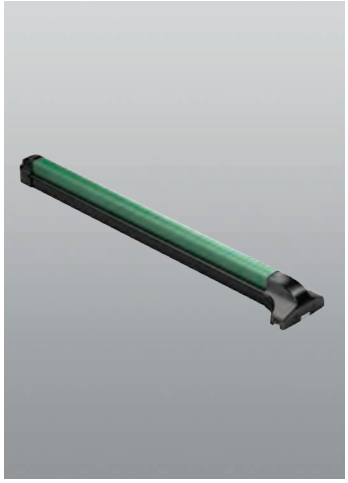

Article	Description	Pcs.	Finishes
6110.702/840	BRUNELLESCHI (pat.) Non-handed vertical support kit, 2 locking points, without rods and without top/bottom latch bolts, in painted zamak and galvanised steel. Complete with: 698 mm bar and 1 723 mm base profile in painted aluminium, 1 573 mm connecting rod in aluminium, 1 fixation counterplate, 4 countersunk head screws Ø 4.2x13, 2 cap screws 4.2x13, 2 socket head cap screws M5x6, 2 countersunk head screws M5x6, 1 countersunk head screw M4x8 and 2 countersunk head screws M4x5 in galvanised steel. For doors with a clear width of 437 to 860 mm and a max. height of 2450 mm.	1	301, 629, S31, S69 *(for description see the legend on page 23)*
6110.702/1200	Like 6110.702/840 but with 1058 mm bar, 893 mm connection rod and 1083 mm base profile. For doors with a clear width of 437 to 1220 mm.	1	
6110.702/1500	Like 6110.702/840 but with 1358 mm bar, 1193 mm connection rod and 1383 mm base profile. For doors with a clear width of 437 to 1520 mm (also finished SSV).	1	

Modular items

Article	Description	Pcs.	Finishes
6110.703/840	BRUNELLESCHI (pat.) Non-handed support kit, for simple and/or multipoint closures, without rods and without top / bottom latch bolts, in painted zamak and galvanised steel. Complete with: 698 mm bar and 1 723 mm base profile in painted aluminium, 1 573 mm connecting rod in aluminium, latch bolt in nickel plated zamak, 1 fixation counterplate in white galvanised steel, 2 keepers and 2 latch bolt caps in painted zamak, 3 nylon caps, 4 countersunk head screws Ø 4.2x13, 4 cap screws 4.2x13, 2 socket head cap screws M5x6, 2 countersunk head screws M5x6, 1 countersunk head screw M4x8 and 2 countersunk head screws M4x5 in galvanised steel. For doors with a clear width of 437 to 860 mm and a max. height of 2450 mm.	1	301, 629, S31, S69 *(for description see the legend on page 23)*
6110.703/1200	Like 6110.703/840 but with 1058 mm bar, 893 mm connection rod and 1083 mm base profile. For doors with a clear width of 437 to 1220 mm.	1	
6110.703/1500	Like 6110.703/840 but with 1358 mm bar, 1193 mm connection rod and 1383 mm base profile. For doors with a clear width of 437 to 1520 mm (also finished SSV).	1	

Article	Description	Pcs.	Finishes
6110.712/840	BRUNELLESCHI (patented) Kit with non-handed vertical supports, 2 locking points, without touch bar, without rods and without top / bottom latch bolts, in painted zamak and galvanised steel. Complete with: 1 723 mm base profile in painted aluminium, 1 573 mm connecting rod in aluminium, 1 fixation counterplate, 4 countersunk head screws Ø 4.2x13, 2 cap screws 4.2x13, 2 socket head cap screws M5x6, 2 countersunk head screws M5x6, 1 countersunk head screw M4x8 and 2 countersunk head screws M4x5 in galvanised steel.	1	905, 910, SLV *(for description see the legend on page 23)*
6110.712/1300	Like 6110.712/840 but with 1033 mm connection rod, 1183 mm base profile and for doors with a clear width of 437 to 1320 mm.	1	

Article	Description	Pcs.	Finishes
6110.713/840	BRUNELLESCHI (pat.) Non-handed vertical support kit, for simple and/or multipoint closures, in painted zamak and galvanised steel. Complete with: 1 723 mm base profile in painted aluminium, 1 573 mm connecting rod in aluminium, latch bolt in nickel plated zamak, 1 fixation counterplate in white galvanised steel, 2 keepers in galvanised zamak, 4 countersunk head screws Ø 4.2x13, 4 cap screws 4.2x13, 2 socket head cap screws M5x6, 2 countersunk head screws M5x6, 1 countersunk head screw M4x8 and 2 countersunk head screws M4x5 in galvanised steel.	1	905, 910, SLV *(for description see the legend on page 23)*
6110.713/1300	Like 6110.713/840 but with 1033 mm connection rod, 1183 mm base profile and for doors with a clear width of 437 to 1320 mm.	1	

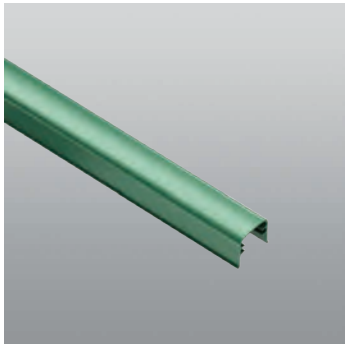

Article	Description	Pcs.	Finishes
6110.B/698	Horizontal 698 mm bar for art. 6110.712/840 and 6110.713/840, in painted aluminium. For doors with a clear width of 437 to 860 mm.	1	301, 629, 905, 910, SLV *(for description see the legend on page 23)*
6110.B/1158	Horizontal 1158 mm bar for art. 6110.712/1300 and 6110.713/1300, in painted aluminium. For doors with a clear width of 437 to 1320 mm (also finished XSD).	1	

UVARRA and BRUNELLESCHI modular items

Article	Description	Pcs.	Finishes
6010.720	Standard vertical rods: 1 upper rod and 1 lower rod in aluminium, 1 rod cover 1037 mm and 1 rod cover 1449 mm in painted aluminium. For doors up to 2450 mm high.	1	905, 910, SLV *(for description see the legend on page 23)*

Article	Description	Pcs.	Finishes
6010.721	Vertical rods: 1 upper rod and 1 lower rod in aluminium, 1 rod cover 1037 mm and 1 rod cover 2099 mm in painted aluminium, 1 adjustable plug in galvanised zamak, 1 countersunk head screws Ø 4.2x13 in galvanised steel. For doors from 2450 mm to 3100 mm high.	1	905, 910, SLV, XSD *(for description see the legend on page 23)*

Article	Description	Pcs.	Finishes
6010.730	(patented) Kit with top / bottom latch bolts in nickel plated zamak. Including: fastening counterplates in galvanised steel, 1 floor-mounted keeper in stainless steel + 1 black nylon insert, 2 adjustable plugs in galvanised zamak, 1 keeper in painted steel, 6 countersunk head screws Ø 4.2x13, 4 cap screws Ø 4.2x13, 2 cap screws Ø 4.2x19, 6 countersunk head screws M4x5 in galvanised steel (GREY: 4 countersunk head screws M4x5 in galvanised steel + 2 countersunk head screws M4x6 in stainless steel).	1	905, 910, GREY, SLV *(for description see the legend on page 23)*

Article	Description	Pcs.	Finishes
6010.735R	(patented) RH Kit with top/side latch bolts in painted zamak and galvanised steel, nickel plated latch bolt. Including: fastening counterplates in galvanised steel, 2 adjustable plugs in galvanised zamak, 2 keepers in painted zamak, 1 keeper in painted steel, 8 countersunk head screws Ø 4.2x13, 4 cap screws Ø 4.2x13, 2 cap screws Ø 4.2x19, 4 countersunk head screws M4x5 and 2 countersunk head screws M5x6 in galvanised steel (GREY: 2 cap screws Ø 4.2x13, 2 cap screws Ø 4.2x19 and 2 countersunk head screws M4x5 in galvanised steel + 2 countersunk head screws M4x6 in stainless steel).	1	905, 910, GREY, SLV *(for description see the legend on page 23)*
6010.735L	Like 6010.735R but LH.	1	

Article	Description	Pcs.	Finishes
6010.740	(patented) Kit with side latch bolts in painted zamak and galvanised steel, nickel plated latch bolt. Including: fastening counterplates in galvanised steel, 2 keepers in painted zamak, 2 adjustable through-guides in galvanised zamak, 10 countersunk head screws Ø 4.2x13, 4 cap screws Ø 4.2x13, 2 countersunk head screws M4x5 and 4 countersunk head screws M5x6 in galvanised steel (GREY: 4 cap screws Ø 4.2x13 in galvanised steel + 2 countersunk head screws M4x6 in stainless steel).	1	905, 910, GREY, SLV *(for description see the legend on page 23)*

External access devices

Article	Description	Pcs.	Finishes
6010.870	External access device, handle only, and grip in painted zamak, square spindle, 1 socket head cap screw M5x30 in white galvanised steel + 2 countersunk head screws M5x80 in black galvanised steel.	1	905, 910, GREY, SLV *(for description see the legend on page 23)*

Article	Description	Pcs.	Finishes
6010.873	External access device, idle handle, in painted zamak and galvanized steel, handle grip in zamak, shaped cylinder with different key combinations, 3 nickel plated keys, squared spindle in white galvanized steel, 2 countersunk head screw M5x80 in galvanized steel.	1	905, 910, GREY, SLV *(for description see the legend on page 23)*
6010.874	Like 6010.873 but with single key combination.	1	

Article	Description	Pcs.	Finishes
6010.875	External access device, idle handle, in painted zamak and galvanised steel, painted die-cast aluminium grip, European profile cylinder with different key combinations + 3 nickel plated keys, square spindle in white galvanised steel, 1 protection cap for transportation on site in plastic material, 1 security cap in steel, 1 socket head cap screw M5x30 in white galvanised steel + 2 countersunk head screws M5x80 in black galvanised steel. With “cylinder unlocked key retention device”.	1	905, 910, GREY, SLV *(for description see the legend on page 23)*
6010.877	Like 6010.875 but with single key combination.	1	

Article	Description	Pcs.	Finishes
6010.876	External access device, idle handle, in painted zamak and galvanised steel, painted die-cast aluminium grip, without cylinder, square spindle in galvanised steel, 1 protection cap for transportation on site in plastic material, 1 security cap in steel, 1 socket head cap screw M5x30 in white galvanised steel + 2 countersunk head screws M5x80 in black galvanised steel. With “cylinder unlocked key retention device”.	1	905, 910, GREY, SLV *(for description see the legend on page 23)*

Article	Description	Pcs.	Finishes
6000.879	External access device with reduced size handle, in painted zamak and galvanised steel, painted die-cast aluminium grip, European profile cylinder with different key combinations + 3 nickel plated keys, square spindle in white galvanised steel, 1 socket head cap screw M5x12 in white galvanised steel + 2 countersunk head screws M5x80 in black galvanised steel. With “cylinder unlocked key retention device”. To use with art. 6010.401.	1	905 *(for description see the legend on page 23)*

External access devices

Article	Description	Pcs.	Finishes
6000.880	Outside access device in painted zamak and galvanised steel, fixed handle with knob, European profile cylinder with different key combinations + 3 nickel plated keys, square spindle in galvanised steel, 2 countersunk head screws M5x80 in black galvanised steel. Preferably for use with the 1 locking point version. To use with art. 6010.401.	1	905, 910, GREY, SLV *(for description see the legend on page 23)*

Article	Description	Pcs.	Finishes
6010.890	Electrical external access device, idle handle, in painted zamak and galvanized steel, handle grip in die-cast painted zamak, European profile cylinder with different key combinations, 3 nickel plated keys, squared spindle in white galvanized steel, 1 socket head cap screw M5x40 in nickel plated steel, 2 countersunk head screw M5x70 in galvanized steel. To use with art. 6010.401.	1	90BI, 90GR, 90NE *(for description see the legend on page 23)*

It is also possible to use an alternative the external access devices from the BERNINI/CELLINI range art. 6000.870/.873/.874/.875/.876/.877 with cam art. 6010.401 (shown below).

Complementary accessories

Article	Description	Pcs.	Finishes
6010.401	Cam in brass to use external access devices art. 6000 .870/.873/.874/.875/.876/.877/.879/.880 on JUVARRA/ BRUNELLESCHI panic-device system.	5	

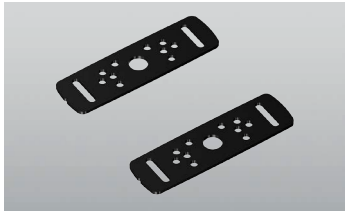

Article	Description	Pcs.	Finishes
6010.424	Shimming plate for main and secondary JUVARRA support (art. 6010.1), in coated steel. To combine with the electric strike art. 6010.820/.824 for application on profiles with height rebate of 8 mm.	5	905, 910 *(for description see the legend on page 23)*

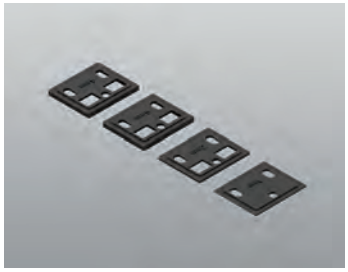

Article	Description	Pcs.	Finishes
6010.800	Kit including: 4 spacers (1 mm, 2 mm and 2 pcs. of 4 mm) in black nylon or white nylon. To use with keeper art. 6010.801.	5	.74, .78 *(for description see the legend on page 23)*

Article	Description	Pcs.	Finishes
6010.801	Kit for horizontal or lateral closings, including: 1 keeper in anti-bacterial coated zamak (905, 910, SLV) and 4 spacers (1 mm, 2 mm and 2 pcs. of 4 mm) in black nylon for the finishes 905, SLV and GREY or white nylon for finishing 910. For applications on profiles in PVC.	5	905, 910, GREY, SLV *(for description see the legend on page 23)*

Complementary accessories

Article	Description	Pcs.	Finishes
6010.805	Kit made of 1 keeper in powder coated steel for horizontal and vertical closings, 1 self-tapping screws TS Ø 4.8x16, 2 self-tapping screws TC Ø 4.2x16 and 2 washers in galvanized steel. For applications on frame profiles.	20	905, 910, GREY, SLV *(for description see the legend on page 23)*

Article	Description	Pcs.	Finishes
6010.811	Kit for horizontal or lateral closings, including: 1 double fitting large keeper in anti-bacterial coated zamak (905, 910, SLV), 1 black nylon gasket, 2 black galvanized self-tapping cap screws Ø 4.8x13 + 2 black galvanized self-tapping cap screws Ø 4.8x50 for finishing 905 or 2 white galvanized self-tapping cap screws Ø 4.8x13 + 2 white galvanized self-tapping cap screws Ø 4.8x50 for the finishes 910, SLV and GREY.	5	905, 910, GREY, SLV *(for description see the legend on page 23)*

Article	Description	Pcs.	Finishes
6010.812	Kit for horizontal or lateral closings, including: 1 double fitting large keeper in anti-bacterial coated zamak (905, 910, SLV), 1 black nylon gasket, 2 black galvanized self-tapping cap screws Ø 4.8x13 + 2 black galvanized self-tapping cap screws Ø 4.8x50 for finishing 905 or 2 white galvanized self-tapping cap screws Ø 4.8x13 + 2 white galvanized self-tapping cap screws Ø 4.8x50 for the finishes 910, SLV and GREY.	5	905, 910, GREY, SLV *(for description see the legend on page 23)*

Article	Description	Pcs.	Finishes
6010.815	Counterplate kit stainless steel, 2 countersunk head screws M5x6 in galvanised steel. To use for fitting the secondary support of JUVARRA by welding.	5	

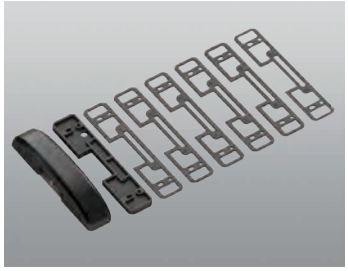

Article	Description	Pcs.	Finishes
6010.820	Electric strike for profiles with height rebate of 0-4-5 mm, with cover in painted zamak, bottom plate and 4 cap screws Ø 3.9x25 in galvanised steel, 4 countersunk head screws M4x8 in stainless steel, black nylon spacers. Electrical feed: 12 V CA. **With relay.**	1	905, 910, SLV *(for description see the legend on page 23)*

Article	Description	Pcs.	Finishes
6010.821	Electric strike for flush profiles, with cover in painted zamak, bottom plate and 4 cap screws Ø 3.9x13 in galvanised steel, 4 countersunk head screws M4x8 in stainless steel, black nylon spacer. Electrical feed: 12 V CA. **With relay.**	1	905, 910, SLV *(for description see the legend on page 23)*

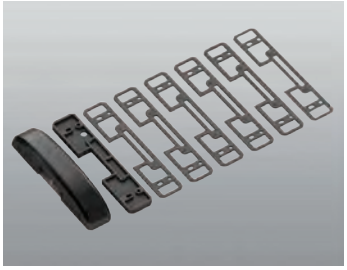

Article	Description	Pcs.	Finishes
6010.824	Electric strike for profiles with height rebate of 0-4-5 mm, with cover in painted zamak, bottom plate and 4 cap screws Ø 3.9x25 in galvanised steel, 4 countersunk head screws M4x8 in stainless steel, black nylon spacers. Electrical feed: 12 V CA. **Without relay.**	1	905, 910, SLV *(for description see the legend on page 23)*

Article	Description	Pcs.	Finishes
6010.825	Electric strike for flush profiles, with cover in painted zamak, bottom plate and 4 cap screws Ø 3.9x13 in galvanised steel, 4 countersunk head screws M4x8 in stainless steel, black nylon spacer. Electrical feed: 12 V CA. **Without relay.**	1	905, 910, SLV *(for description see the legend on page 23)*

Complementary accessories

Article	Description	Pcs.	Finishes
6010.830	Dogging mechanism in black nylon and zamak for JUVARRA panic bars.	5	

Article	Description	Pcs.	Finishes
6010.842	1 Microswitch and 1 black nylon support, 1 cap screw Ø 2.2x13 in galvanised steel and 1 cap scap screw Ø 3.9x19 in stainless steel. For JUVARRA panic bars.	5	

Article	Description	Pcs.	Finishes
6110.842	1 Microswitch, 1 support and 1 button in black nylon , 1 cap screw Ø 2.2x13 in galvanised steel, for BRUNELLESCHI panic bars. For doors with a clear minimum width of 485 mm.	5	

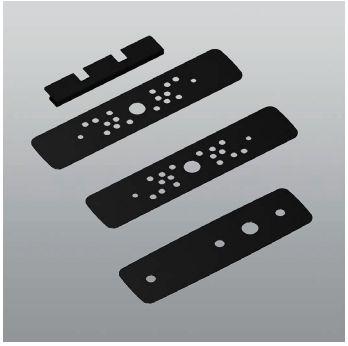

Article	Description	Pcs.	Finishes
6010.899	Cover machining plate kit in coated steel in case of use of JUVARRA to replace any other handle previously installed on the door. To combine with art. 6010.701, 6010.1/1200.	5	

Article	Description	Pcs.	Finishes
6000.843	Adjustable through-guides for art. 6010.720/.721, in galvanised zamak + 1 countersunk head screws Ø 3.9x13 in black galvanised steel.	20	

Complementary accessories

Article	Description	Pcs.	Finishes
6000.890	JUVARRA exit sign plate.	10	

Article	Description	Pcs.	Finishes
6100.890	BRUNELLESCHI exit sign plate.	10	

Article	Description	Pcs.	Finishes
6000.897	Fastening kit for external access device for profiles with section up to 100 mm, 1 squared spindle of 8 mm in white galvanized steel, 2 countersunk head screw M5x110 in white galvanized steel.	20	

Article	Description	Pcs.	Finishes
6000.952	Aluminium drilling jig for external access devices art. 6010.875/.876/.877 and 6000.875/.876/.877/.879/.880.	1	

Legend of ANTIBACTERIAL painted finishes

Code	Description
301	black supports, red bar
629	black supports, green bar
S31	silver supports, red bar
S69	silver supports, green bar
905	black powder coated
910	white powder coated
SLV	silver powder coated
SSV	silver supports, silver bar

Legend of the other finishes

Code	Description
.74	black nylon
.78	white nylon
GREY	silver powder coated
S	satin finished stainless steel
XSD	satin steel
90BI	white powder coated
90GR	grey powder coated
90NE	black powder coated

JUVARRA Product codes necessary for the various modular configurations

SCHEME FOR ONE CLOSING POINT

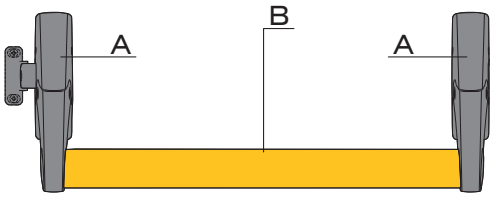

Ref.	Width leaf	Article
A	< 900 mm	6010.701
B		+ 6010.B/860
A	< 1240 mm	6010.701
B		+ 6010.B/1200
A	< 1540 mm	6010.701
B		+ 6010.B/1500

SCHEME FOR TWO CLOSING POINTS

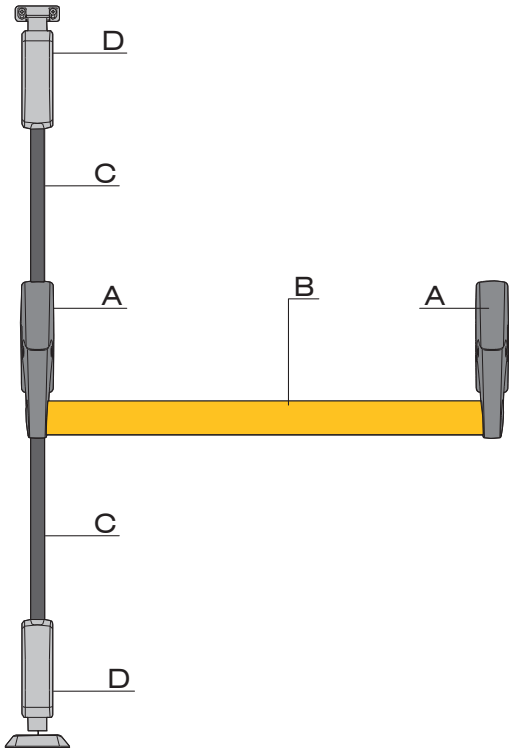

Ref.	Width leaf	H up to 2450	H up to 3100
A	< 900 mm	6010.702	6010.702
B		+ 6010.B/860	+ 6010.B/860
C		+ 6010.720	+ 6010.721
D		+ 6010.730	+ 6010.730
A	< 1240 mm	6010.702	6010.702
B		+ 6010.B/1200	+ 6010.B/1200
C		+ 6010.720	+ 6010.721
D		+ 6010.730	+ 6010.730
A	< 1540 mm	6010.702	6010.702
B		+ 6010.B/1500	+ 6010.B/1500
C		+ 6010.720	+ 6010.721
D		+ 6010.730	+ 6010.730

JUVARRA Product codes necessary for the various modular configurations

SCHEME FOR THREE CLOSING POINTS

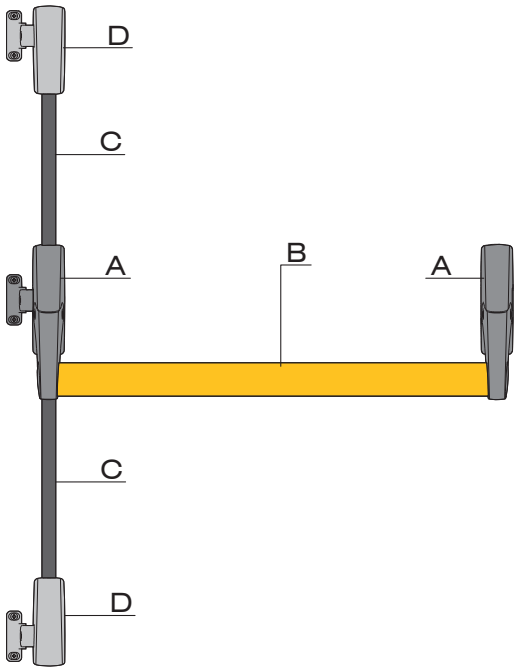

Ref.	Width leaf	H up to 2450	H up to 3100
A	< 900 mm	6010.703	6010.703
B		+ 6010.B/860	+ 6010.B/860
C		+ 6010.720	+ 6010.721
D		+ 6010.740	+ 6010.740
A	< 1240 mm	6010.703	6010.703
B		+ 6010.B/1200	+ 6010.B/1200
C		+ 6010.720	+ 6010.721
D		+ 6010.740	+ 6010.740
A	< 1540 mm	6010.703	6010.703
B		+ 6010.B/1500	+ 6010.B/1500
C		+ 6010.720	+ 6010.721
D		+ 6010.740	+ 6010.740

SCHEME FOR THREE CLOSING POINTS HIGH / SIDE

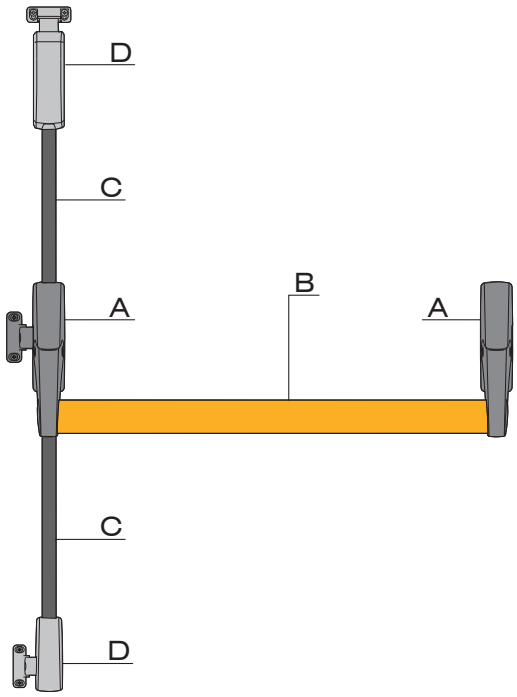

Ref.	Width leaf	H up to 2450	H up to 3100
A	< 900 mm	6010.703	6010.703
B		+ 6010.B/860	+ 6010.B/860
C		+ 6010.720	+ 6010.721
D		+ 6010.735R/L	+ 6010.735R/L
A	< 1240 mm	6010.703	6010.703
B		+ 6010.B/1200	+ 6010.B/1200
C		+ 6010.720	+ 6010.721
D		+ 6010.735R/L	+ 6010.735R/L
A	< 1540 mm	6010.703	6010.703
B		+ 6010.B/1500	+ 6010.B/1500
C		+ 6010.720	+ 6010.721
D		+ 6010.735R/L	+ 6010.735R/L

BRUNELLESCHI Product codes necessary for the various modular configurations

SCHEME FOR ONE CLOSING POINT

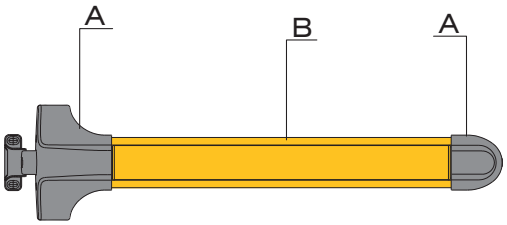

Ref.	Clear width	Article
A B	437 - 860 mm	6110.703/840
A B	437 - 1220 mm	6110.703/1200
A B	437 - 1520 mm	6110.703/1500
A	437 - 860 mm	6110.713/840
B		6110.B/698
A	437 - 1320 mm	6110.713/1300
B		6110.B/1158

SCHEME FOR TWO CLOSING POINTS HIGH / LOW

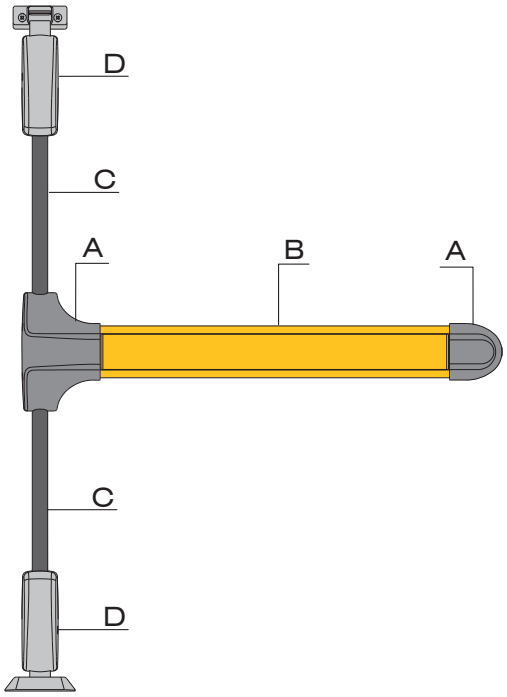

Ref.	Clear width	H up to 2450	H up to 3100
A B	437 - 860 mm	6110.702/840	6110.702/840
C		+ 6010.720	+ 6010.721
D		+ 6010.730	+ 6010.730
A B	437 - 1220 mm	6110.702/1200	6110.702/1200
C		+ 6010.720	+ 6010.721
D		+ 6010.730	+ 6010.730
A B	437 - 1520 mm	6110.702/1500	6110.702/1500
C		+ 6010.720	+ 6010.721
D		+ 6010.730	+ 6010.730
A	437 - 860 mm	6110.712/840	6110.712/840
B		+ 6110.B/698	+ 6110.B/698
C		+ 6010.720	+ 6010.721
D		+ 6010.730	+ 6010.730
A	437 - 1320 mm	6110.712/1300	6110.712/1300
B		+ 6110.B/1158	+ 6110.B/1158
C		+ 6010.720	+ 6010.721
D		+ 6010.730	+ 6010.730

BRUNELLESCHI Product codes necessary for the various modular configurations

SCHEME FOR THREE LATERAL CLOSING POINTS

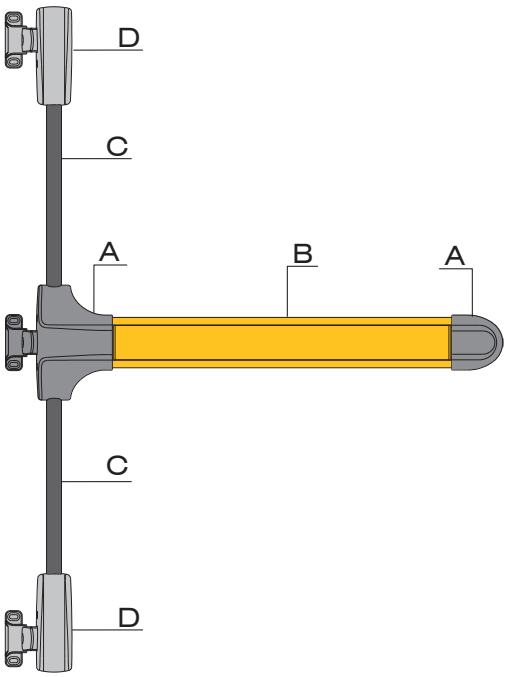

Ref.	Clear width	H up to 2450	H up to 3100
A B	437 - 860 mm	6110.703/840	6110.703/840
C		+ 6010.720	+ 6010.721
D		+ 6010.740	+ 6010.740
A B	437 - 1220 mm	6110.703/1200	6110.703/1200
C		+ 6010.720	+ 6010.721
D		+ 6010.740	+ 6010.740
A B	437 - 1520 mm	6110.703/1500	6110.703/1500
C		+ 6010.720	+ 6010.721
D		+ 6010.740	+ 6010.740
A	437 - 860 mm	6110.713/840	6110.713/840
B		+ 6110.B/698	+ 6110.B/698
C		+ 6010.720	+ 6010.721
D		+ 6010.740	+ 6010.740
A	437 - 1320 mm	6110.713/1300	6110.713/1300
B		+ 6110.B/1158	+ 6110.B/1158
C		+ 6010.720	+ 6010.721
D		+ 6010.740	+ 6010.740

SCHEME FOR THREE CLOSING POINTS HIGH / SIDE

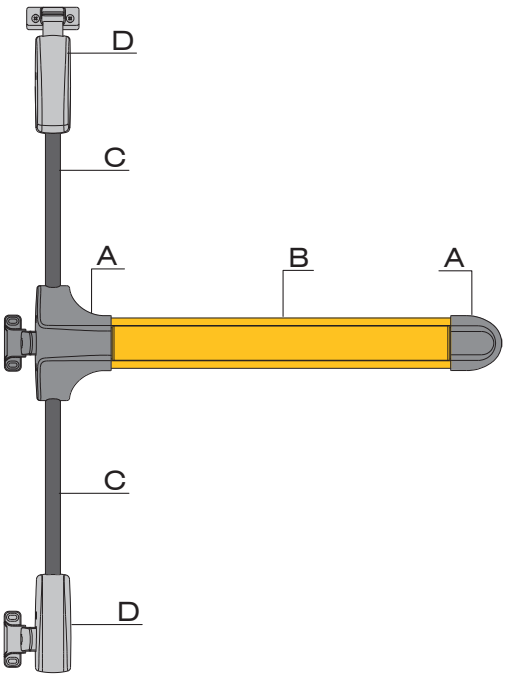

Ref.	Clear width	H up to 2450	H up to 3100
A B	437 - 860 mm	6110.703/840	6110.703/840
C		+ 6010.720	+ 6010.721
D		+ 6010.735R/L	+ 6010.735R/L
A B	437 - 1220 mm	6110.703/1200	6110.703/1200
C		+ 6010.720	+ 6010.721
D		+ 6010.735R/L	+ 6010.735R/L
A B	437 - 1520 mm	6110.703/1500	6110.703/1500
C		+ 6010.720	+ 6010.721
D		+ 6010.735R/L	+ 6010.735R/L
A	437 - 860 mm	6110.713/840	6110.713/840
B		+ 6110.B/698	+ 6110.B/698
C		+ 6010.720	+ 6010.721
D		+ 6010.735R/L	+ 6010.735R/L
A	437 - 1320 mm	6110.713/1300	6110.713/1300
B		+ 6110.B/1158	+ 6110.B/1158
C		+ 6010.720	+ 6010.721
D		+ 6010.735R/L	+ 6010.735R/L

JUVARRA complete kits

6010.1/1200

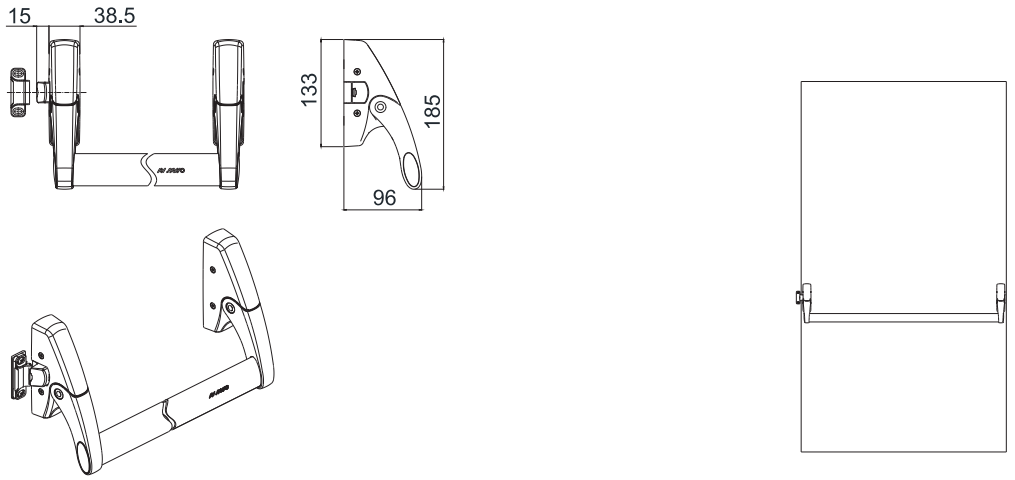

6010.2/1200

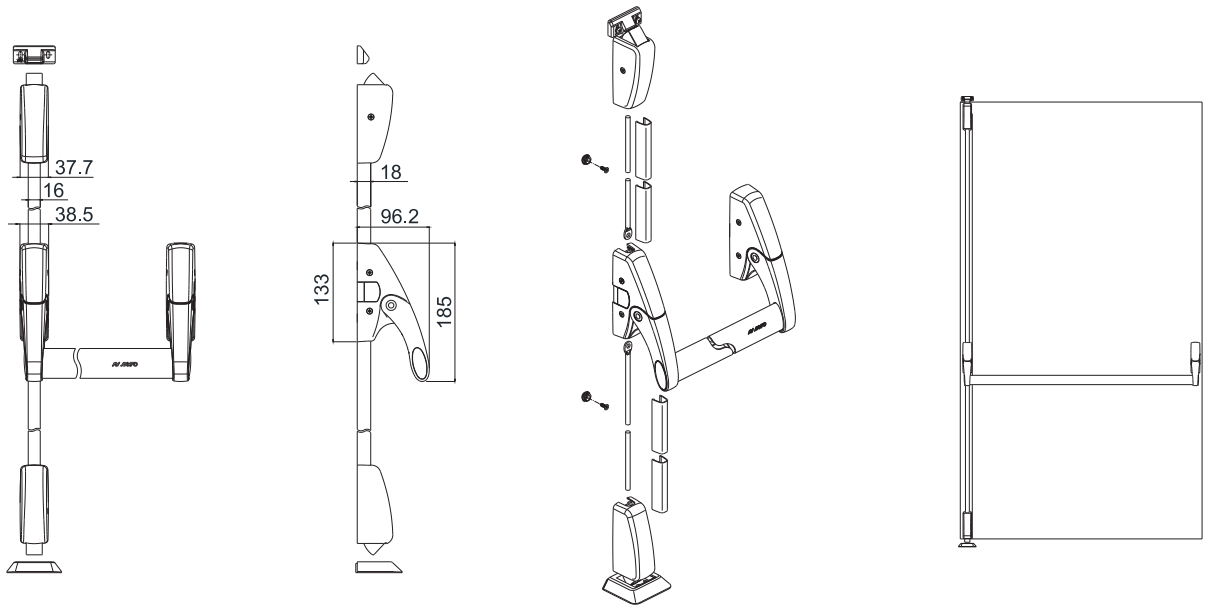

6010.3/1200

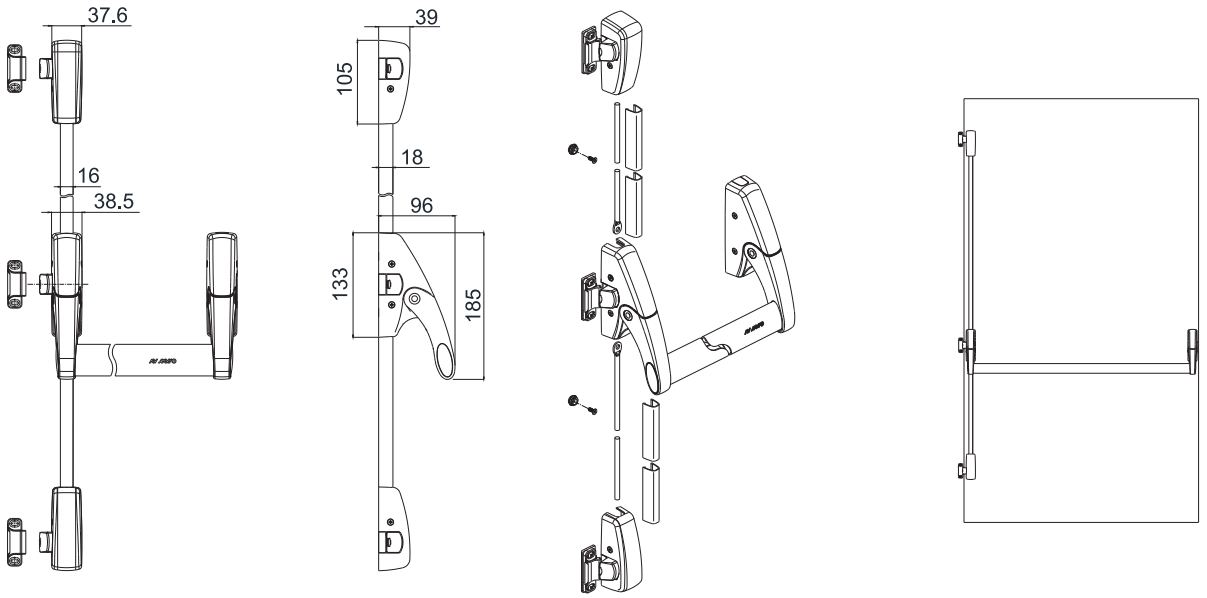

BRUNELLESCHI complete kits

6110.1/840

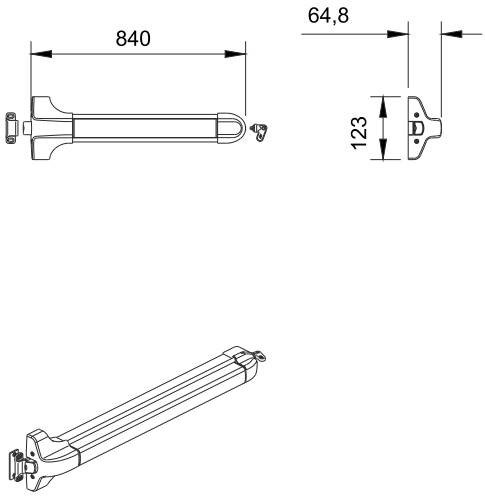

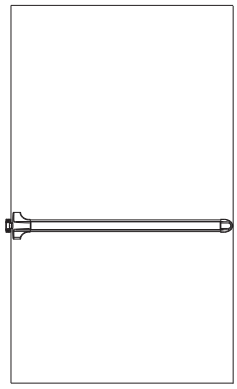

6110.2/840

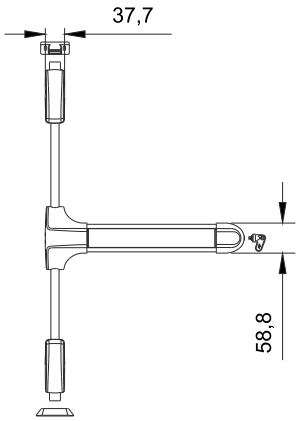

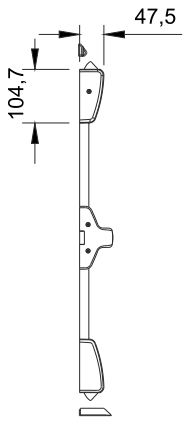

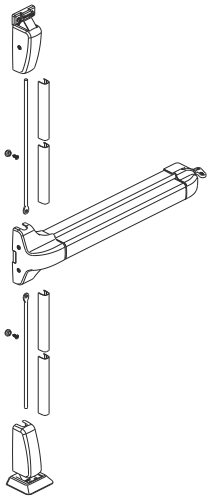

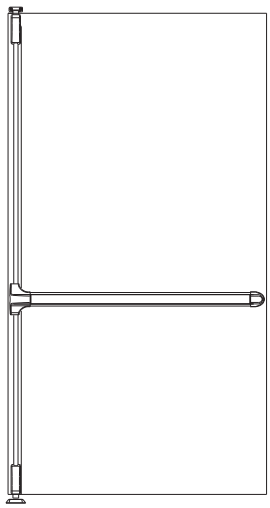

6110.3/840

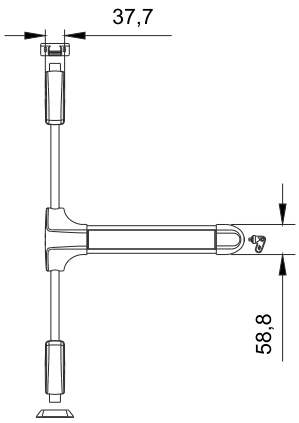

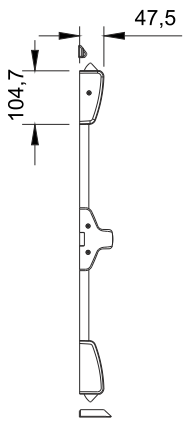

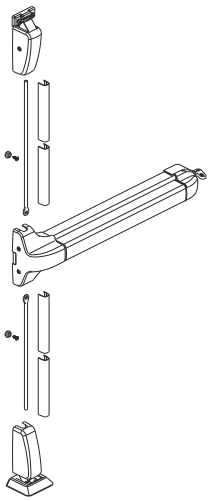

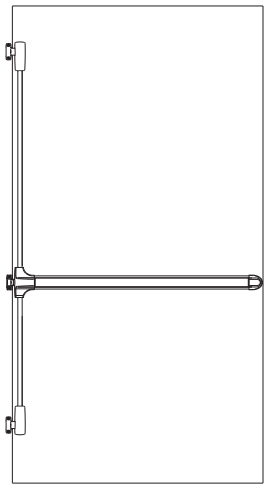

Modular items

6010.701

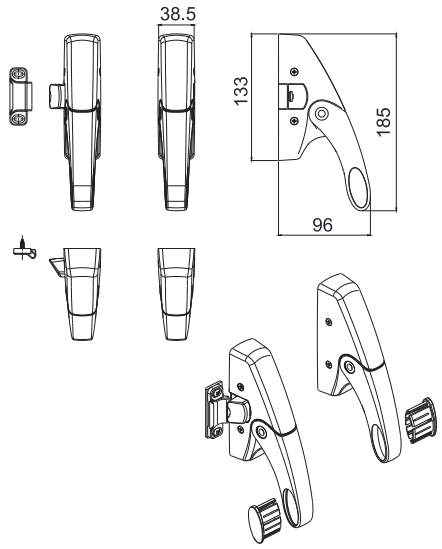

6010.702

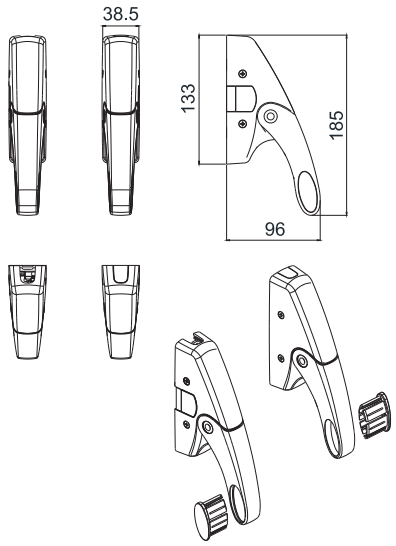

6010.703

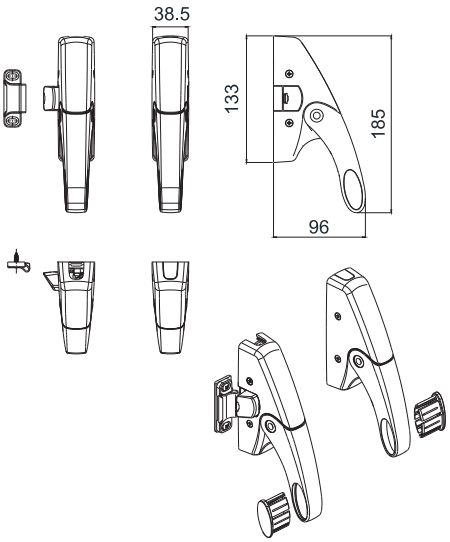

6110.702

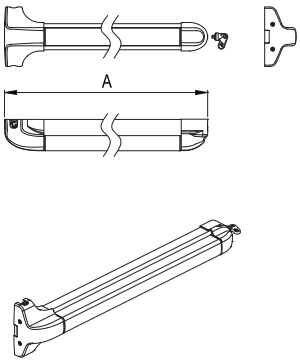

Art.	A (mm)
6110.702/840	840
6110.702/1200	1200
6110.702/1500	1500

6110.703

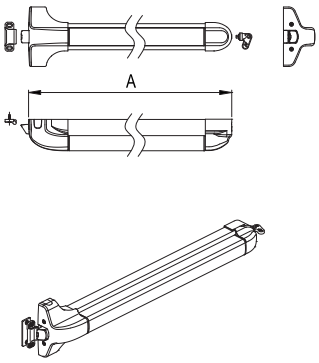

Art.	A (mm)
6110.703/840	840
6110.703/1200	1200
6110.703/1500	1500

6110.712

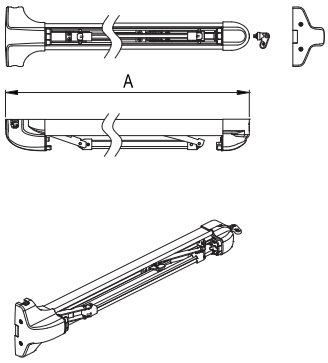

Art.	A (mm)
6110.712/840	840
6110.712/1300	1300

6110.713

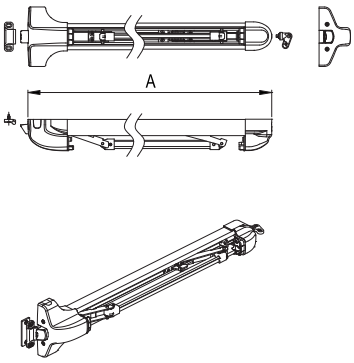

Art.	A (mm)
6110.713/840	840
6110.713/1300	1300

6010.730

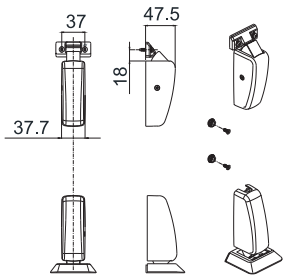

6010.735R

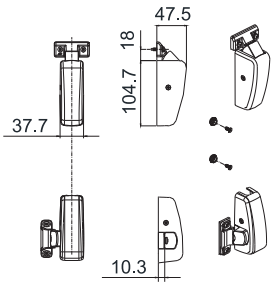

6010.735L

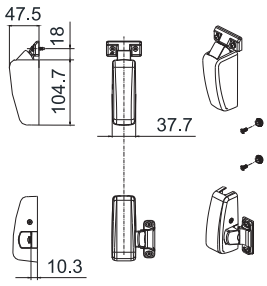

6010.740

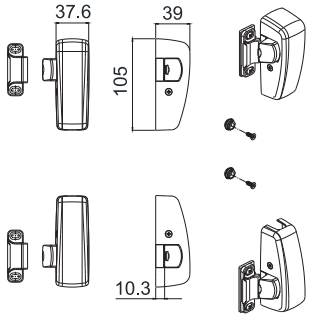

External access devices

6010.870

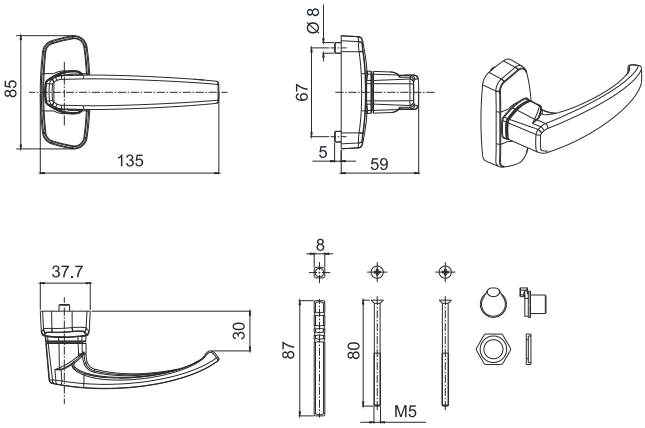

6010.873 - 6010.874

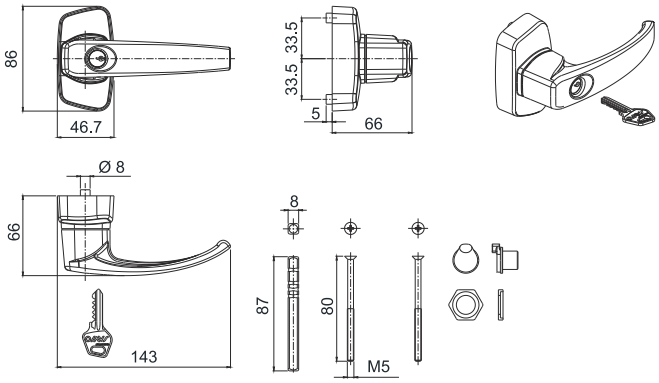

6010.875 - 6010.876 - 6010.877

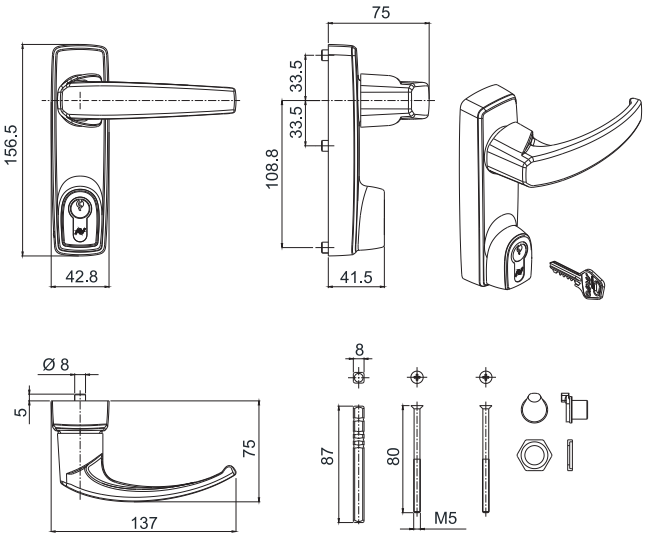

6010.890

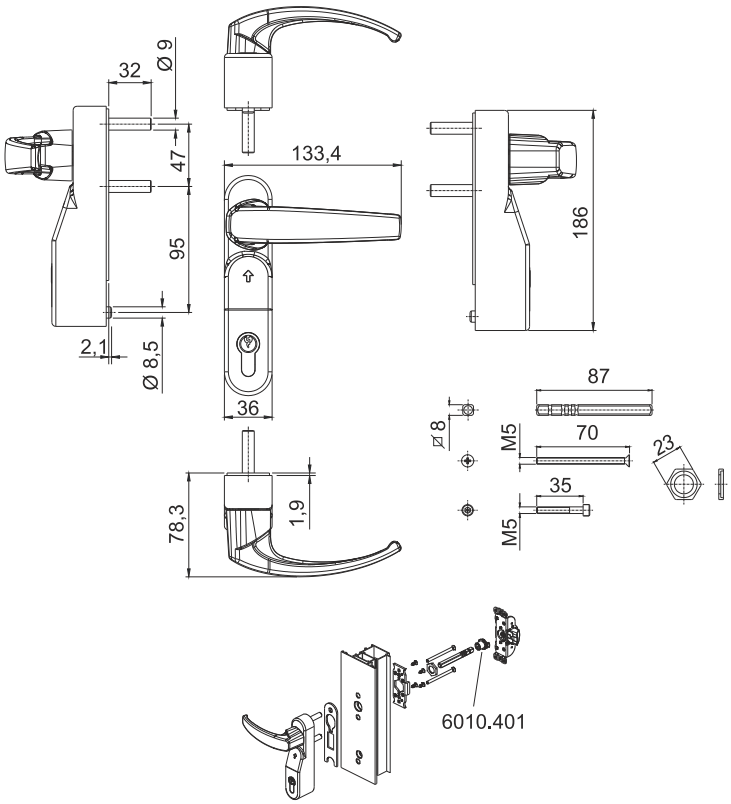

6000.879

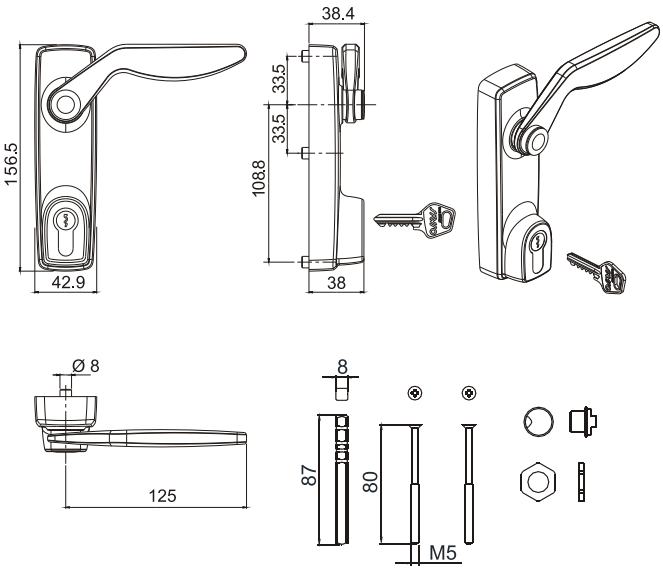

6000.880

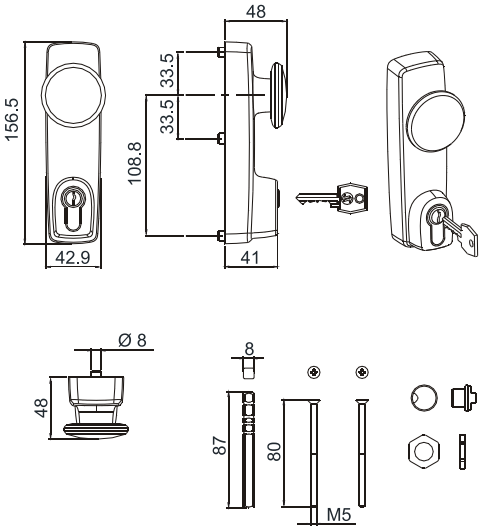

Complementary accessories

6010.424

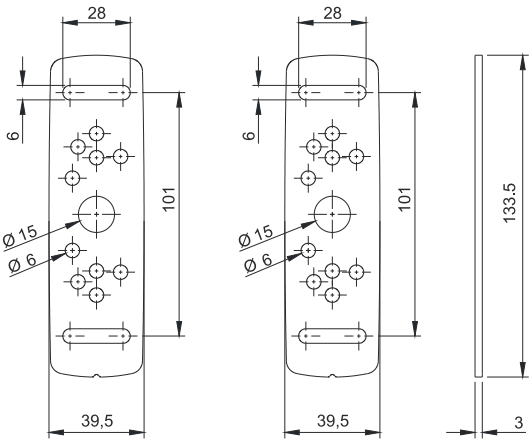

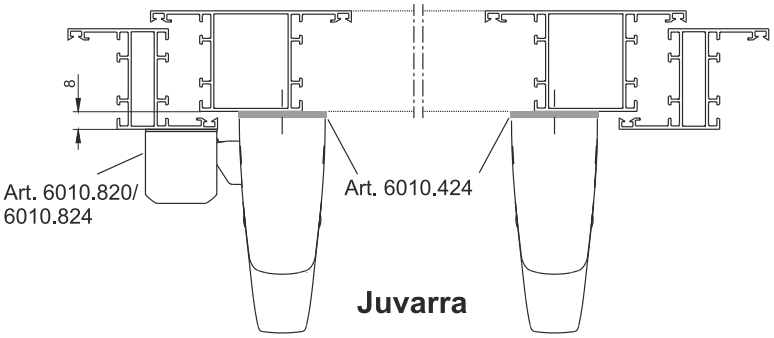

6010.800

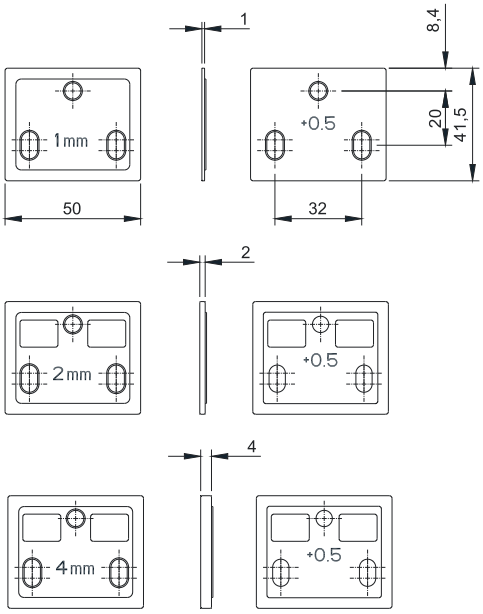

6010.801

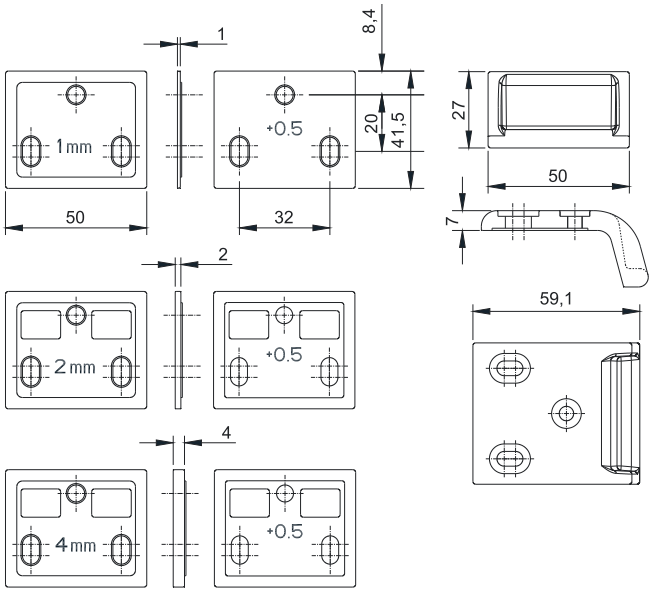

6010.805

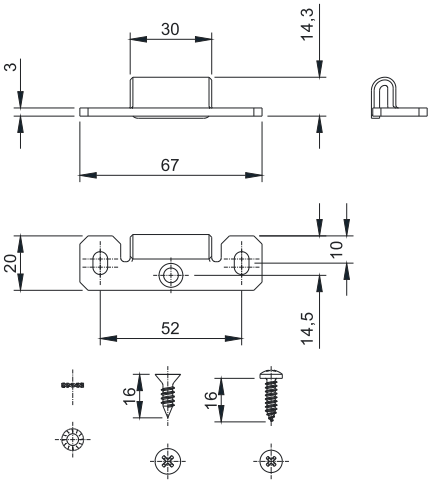

6010.811

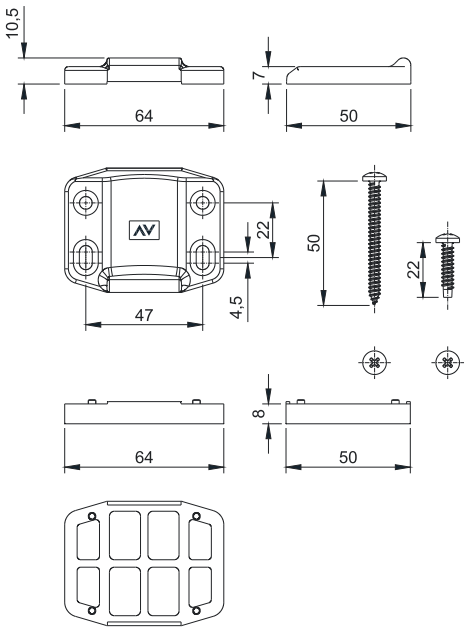

Complementary accessories

6010.812

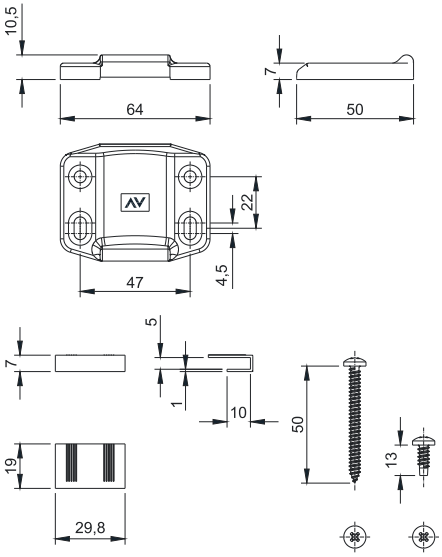

6010.815

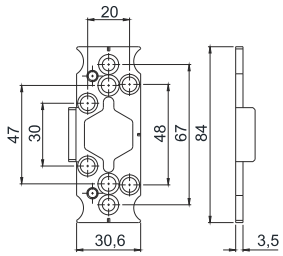

6010.821 - 6010.825

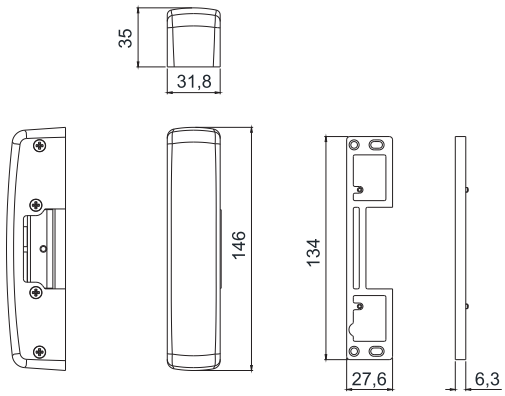

6010.820 - 6010.824

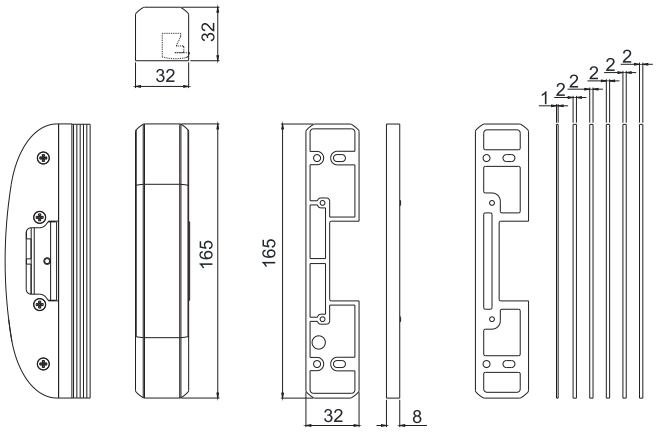

6000.952

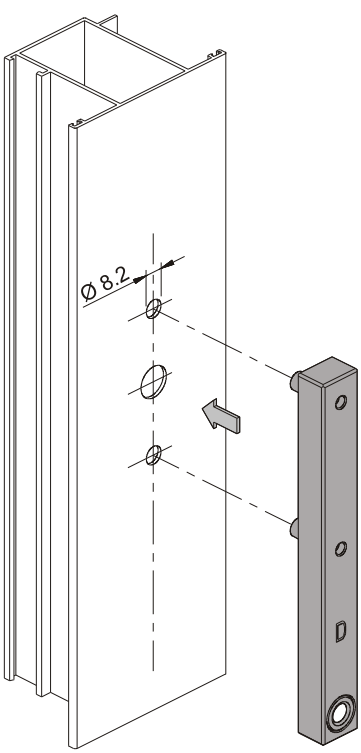

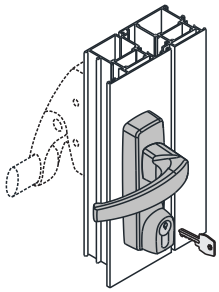

6000.879

6010.875
6010.876
6010.877

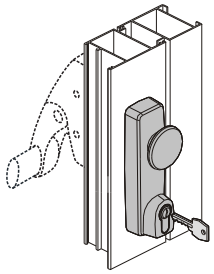

6000.880

6000.897

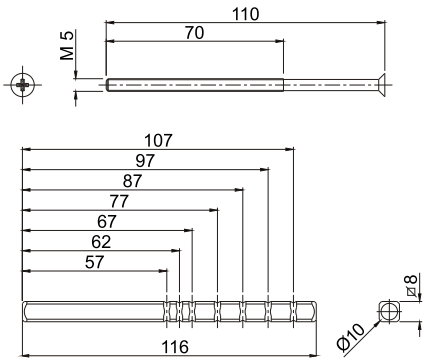

Complementary accessories

6010.899

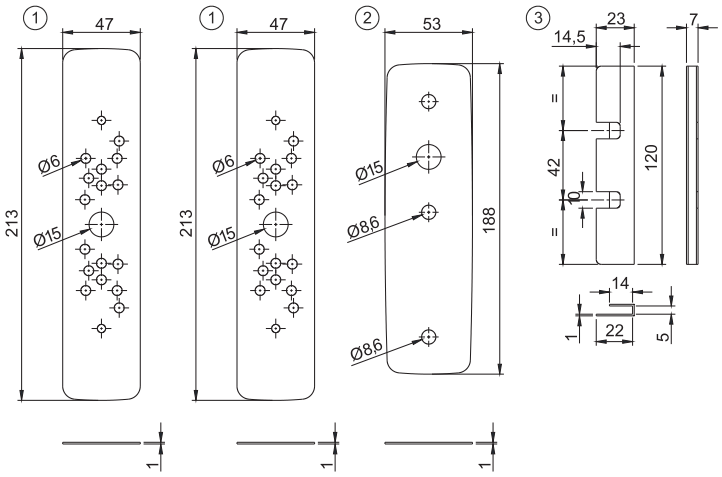

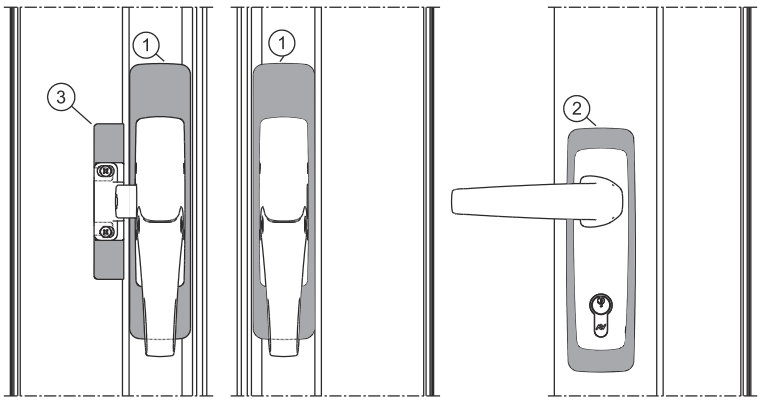

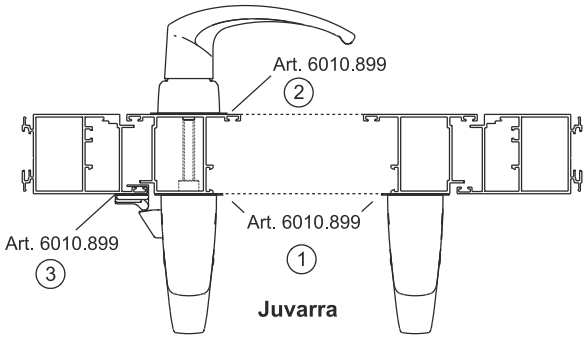

Certified application schemes for single door

Legend:
JUVARRA alternative configurations

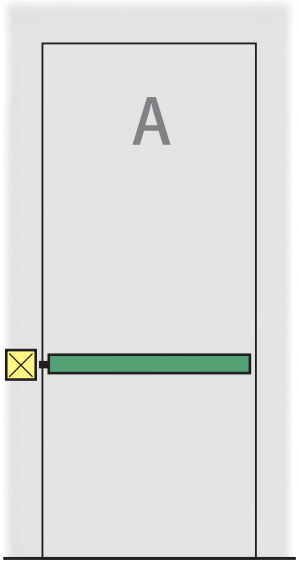

Application A:

JUVARRA
6010.1/1200

6010.701 + 6010.B

6010.703 + 6010.B

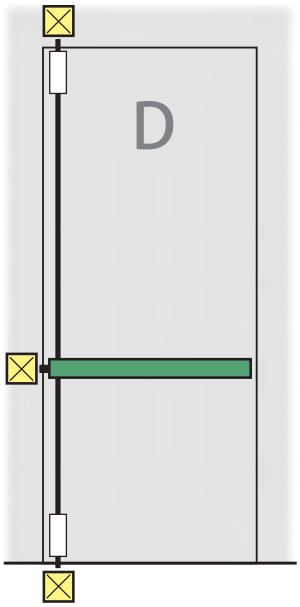

Application D:

JUVARRA

6010.703 + 6010.B
+ 6010.720/.721 +
6010.730

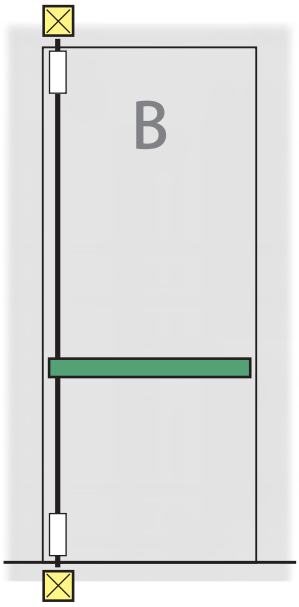

Application B:

JUVARRA
6010.2/1200

6010.702 + 6010.B
+ 6010.720/.721 +
6010.730

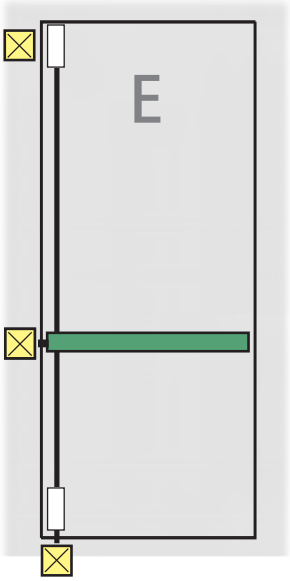

Application E:

JUVARRA

6010.703 + 6010.B
+ 6010.720/.721 +
6010.730 + 6010.740

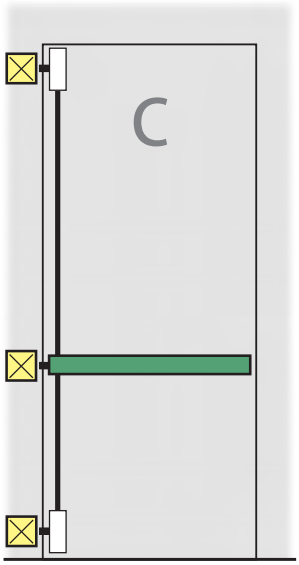

Application C:

JUVARRA
6010.3/1200

6010.703 + 6010.B
+ 6010.720/.721 +
6010.740

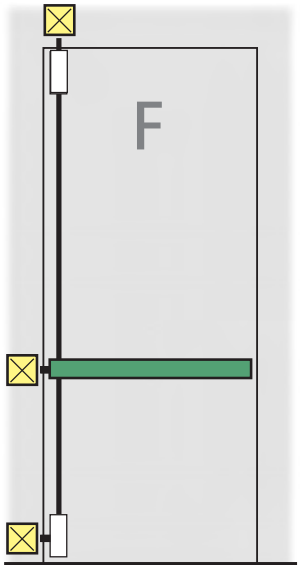

Application F:

JUVARRA

6010.703 + 6010.B
+ 6010.720/.721 +
6010.735R/L

Certified application schemes on 2 leaf doors

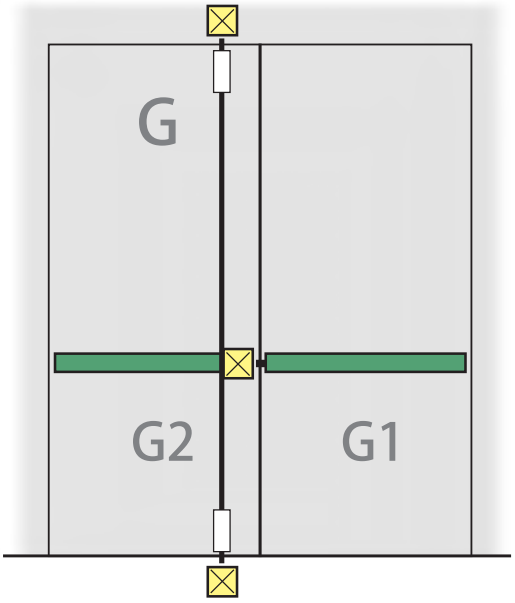

Legend:
JUVARRA alternative configurations

Application G:

G1 JUVARRA

6010.1/1200
6010.701 + 6010.B

6010.703 + 6010.B

G2 JUVARRA

6010.2/1200
6010.702 + 6010.B + 6010.720/.721 + 6010.730

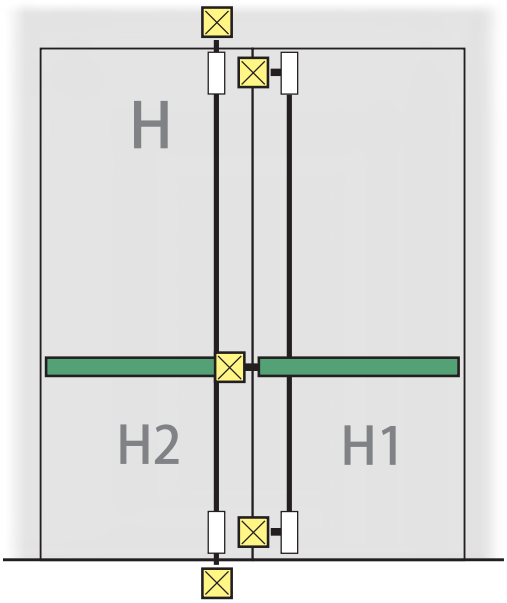

Application H:

H1 JUVARRA

6010.3/1200
6010.703 + 6010.B + 6010.720/.721 + 6000.740

H2 JUVARRA

6010.2/1200
6010.702 + 6010.B + 6010.720/.721 + 6010.730

Certified application schemes for single door

Legend:
BRUNELLESCHI alternative configurations

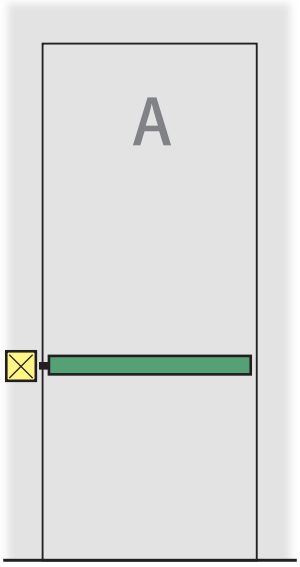

Application A:

BRUNELLESCHI
6110.1/840

6110.703

6110.713 + 6110.B

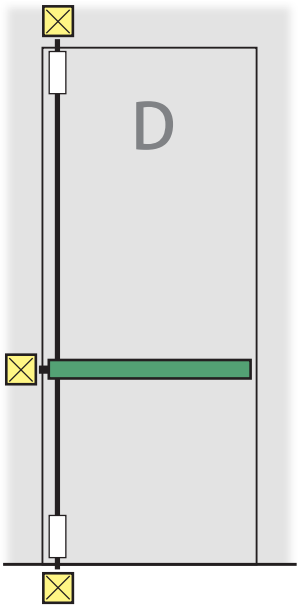

Application D:

BRUNELLESCHI

6110.703 + 6010.720/.721 + 6010.730

6110.713 + 6110.B + 6010.720/.721 + 6010.730

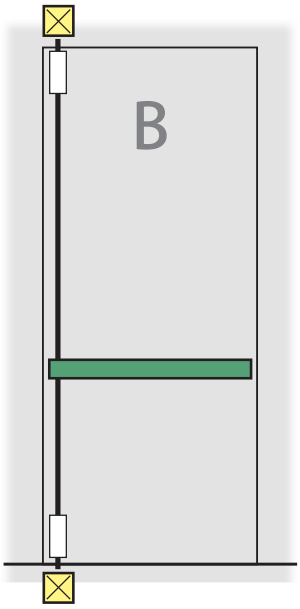

Application B:

BRUNELLESCHI
6110.2/840

6110.702 + 6010.720/.721 + 6010.730

6110.712 + 6110.B + 6010.720/.721 + 6010.730

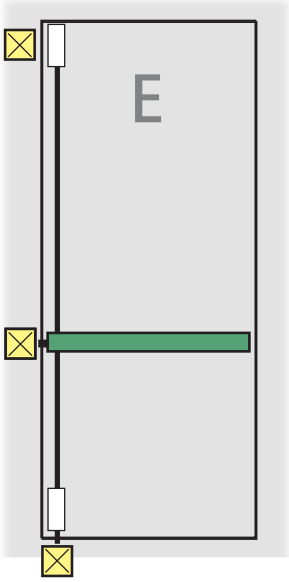

Application E:

BRUNELLESCHI

6110.703 + 6010.720/.721 + 6010.730 + 6010.740

6110.713 + 6110.B + 6010.720/.721 + 6010.730 + 6010.740

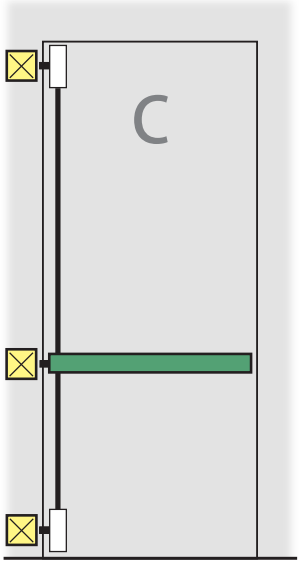

Application C:

BRUNELLESCHI
6110.3/840

6110.703 + 6010.720/.721 + 6010.740

6110.713 + 6110.B + 6010.720/.721 + 6010.740

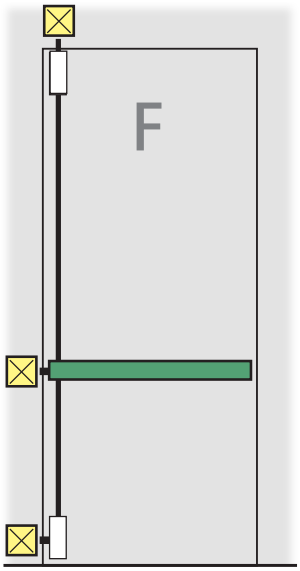

Application F:

BRUNELLESCHI

6110.703 + 6010.720/.721 + 6010.735R/L

6110.713 + 6110.B + 6010.720/.721 + 6010.735R/L

Certified application schemes on 2 leaf doors

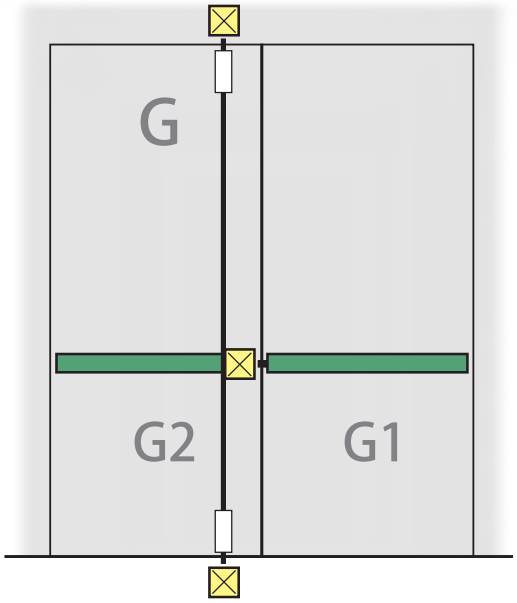

Legend:
BRUNELLESCHI alternative configurations

Application G:

G1 BRUNELLESCHI

6110.1/840
6110.703

6110.713 + 6110.B

G2 BRUNELLESCHI

6110.2/840
6110.702 + 6010.720/.721 + 6010.730

6110.712 + 6110.B + 6010.720/.721 + 6010.730

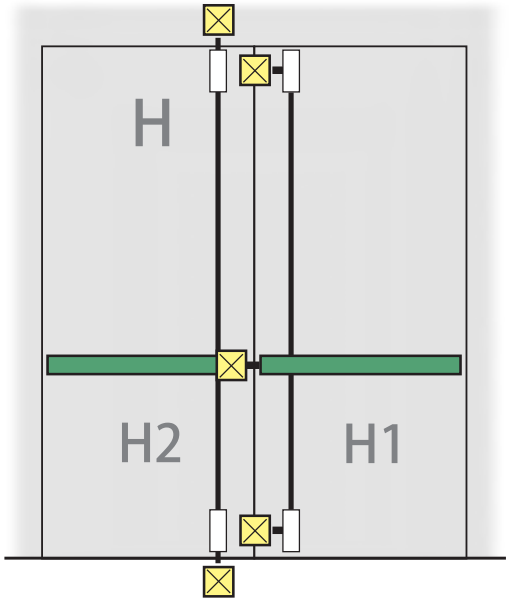

Application H:

H1 BRUNELLESCHI

6110.3/840
6110.703 + 6010.720/.721 + 6010.740

6110.713 + 6110.B + 6010.720/.721 + 6010.740

H2 BRUNELLESCHI

6110.2/840
6110.702 + 6010.720/.721 + 6010.730

6110.712 + 6110.B + 6010.720/.721 + 6010.730

Savio S.p.A.
Via Torino, 25 (S.S. 25) - 10050 Chiusa S. MIchele (TO)
Tel. +39 011 964 34 64 - Fax +39 011 964 34 74
www.savio.it - export@savio.it

SAVIO EARTH CARE

MIX
Paper from responsible sources
FSC® C004467

9507.825 - REV. 0 - 2290415