SWING DOOR

Door closers with link arm

Contents

Overview 04

FOR SINGLE LEAF DOORS

TS 1000 C 08
TS 1500 12
TS 2000 NV 16
TS 4000 EN 1–6 21
TS 4000 EN 5–7 27
TS 4000 E 32
TS 4000 R 37
TS 4000 Tandem 41

FOR SINGLE LEAF DOORS WITH FREE SWING FUNCTION

TS 4000 EFS 48
TS 4000 RFS 53

FOR DOUBLE LEAF DOORS

TS 4000 IS 60
TS 4000 E–IS 66
TS 4000 R–IS 72

ACCESSORIES

RSZ 7 smoke switch control unit 80

FURTHER INFORMATION

Technology 84
Product functions and information 85
General product information for door closers 86
Cover caps for GEZE door closers 87

OVERVIEW

For single leaf doors

	TS 1000 C	TS 1500	TS 2000 NV	TS 4000 size 1–6	TS 4000 size 5–7	TS 4000 E	TS 4000 R	TS 4000 EFS	TS 4000 RFS	TS 4000 Tandem
Approval for fire and smoke protection doors[8]			●	●	●	●	●	●	●	●
Barrier-free in accordance with DIN 18040 up to leaf width (max.) in mm	EN3 950	EN4 1100	EN4 1100	EN4 1100		FSA	FSA	FSA FL	FSA FL	
Closing force acc. to EN 1154	2/3	3/4	2–4	1–6	5–7	1–6	1–6	1–6	1–6	> 7
Door leaf width (max.) in mm	950	1100	1100	1400	1600	1400	1400	1400	1400	>1600
POSSIBLE APPLICATIONS										
Door leaf installation, hinge side	●	●	●	●	●	●		●		●
Opening angle (max.) hinge side[7]	180°	180°	180°	180°	180°	180°	180°	180°	180°	180°
Door leaf installation, opposite hinge side	●[6]	●[6]	●[6]	●[6]	●[6]					●[6]
Transom installation, opposite hinge side	●	●	●	●	●	●	●	●	●	●
FUNCTIONS										
Closing force, adjustable	●	●	●	●	●	●	●	●	●	●
Back check, adjustable			●[2]	●	●					●
Hydraulic latching action, adjustable	●	●	●	●	●	●	●	●	●	●
Delayed closing, adjustable				●[1]						
Closing speed, adjustable	●	●	●	●	●	●	●	●	●	●
Mechanical hold-open device	●	●	●	●	●[4]					
Electric hold-open device						●	●			
Electric hold-open for free swing								●	●	
Smoke switch control unit, integrated							●		●	
Closing sequence control, integrated										

● = Yes

1 Model TS 4000 S with delayed closing | 2 Model TS 2000 NV BC (adjustable)) | 3 Not for F and RD doors | 4 Hold-open linkage only effective up to EN6 | 5 System solution consisting of a TS 4000 IS/ E-IS/ R-IS on the active leaf in combination with a TS 4000 /E / R-IS second unit on the passive leaf and release mechanism in frame | 6 In parallel arm installation | 7 Opening angle (max.) opposite hinge side, see chapter: Further information | 8 Valid for Germany. Regulations may differ for other countries and must therefore be determined from local provisions. In such cases, contact your local GEZE branch/ representative.

FSA = Hold-open system | FSA FL = Hold-open system free swing

For double leaf doors

	TS 4000 IS [5]	TS 4000 E-IS [5]	TS 4000 R-IS [5]
Approval for fire and smoke protection doors[8]	●	●	●
Barrier-free in accordance with DIN 18040 up to leaf width (max.) in mm	EN4 1100	FSA	FSA
Closing force acc. to EN 1154	1-6	1-6	1-6
Door leaf width (max.) in mm	1400	1400	1400
POSSIBLE APPLICATIONS			
Door leaf installation, hinge side	●	●	
Opening angle (max.) hinge side[7]	180°	180°	–[7]
Door leaf installation, opposite hinge side			
Transom installation, opposite hinge side	●	●	●
FUNCTIONS			
Closing force, adjustable	●	●	●
Back check, adjustable			
Hydraulic latching action, adjustable	●	●	●
Delayed closing, adjustable			
Closing speed, adjustable	●	●	●
Mechanical hold-open device	●		
Electric hold-open device		●	●
Electric hold-open for free swing			
Smoke switch control unit, integrated			●
Closing sequence control, integrated	●	●	●

SWING DOOR

For single leaf doors

GEZE overhead door closers with link arm have two distinguishing features: convenient to handle and safe to use. Because our door closers don't just make opening the door easier, they also guarantee reliable closing in the event of a fire. Use our extensive range of door closers for single leaf doors to retrofit your doors accordingly as well – thereby satisfying the much tighter legal regulations.

TS 1000 C

Overhead door closer with link arm for single leaf doors up to 950 mm leaf width with adjustable closing speed

AREAS OF APPLICATION

- Right and left single-action doors in the interior area
- Single-action doors up to 950 mm leaf width
- Door leaf installation on hinge side and transom installation on opposite hinge side
- Door leaf installation on the opposite hinge side in parallel arm installation possible

PRODUCT FEATURES

- Variable closing force of EN2 or EN3 by reversing the bearing block
- Can be used for right and left hand doors without conversion
- Hydraulic latching action which accelerates the door shortly before the closed position
- Closing speed can be individually adjusted

SPECIAL VERSION

→ GEZE TS 1000 C with hold-open linkage with adjustable hold-open angle of between 70° and 150°

TECHNICAL DATA FOR DOOR CLOSER

	TS 1000 C door closer
PRODUCT FEATURES	
Closing force acc. to EN 1154	2/3
Leaf width recommended up to	950 mm
Identical design for DIN left and DIN right	●
Product tested in accordance with	Door closer tested in accordance with EN 1154
Length	215 mm
Overall depth	44 mm
Height	52 mm
FUNCTIONS	
Closing force adjustable	via installation
Closing speed adjustable	●
Latching action adjustable	via valve
Back check integrated	–
Position of closing force adjustment	Installation position

● = yes

PRODUCT SCALE DRAWING

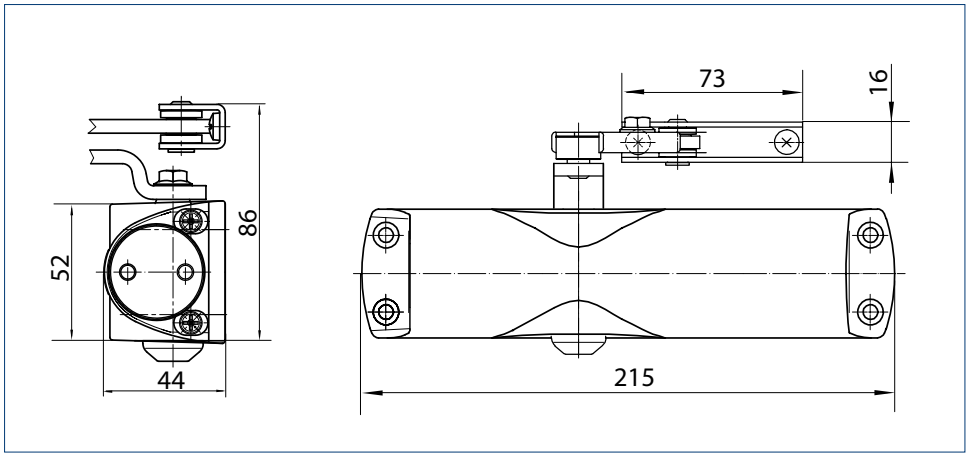

DOOR LEAF INSTALLATION/HINGE SIDE

VIEW

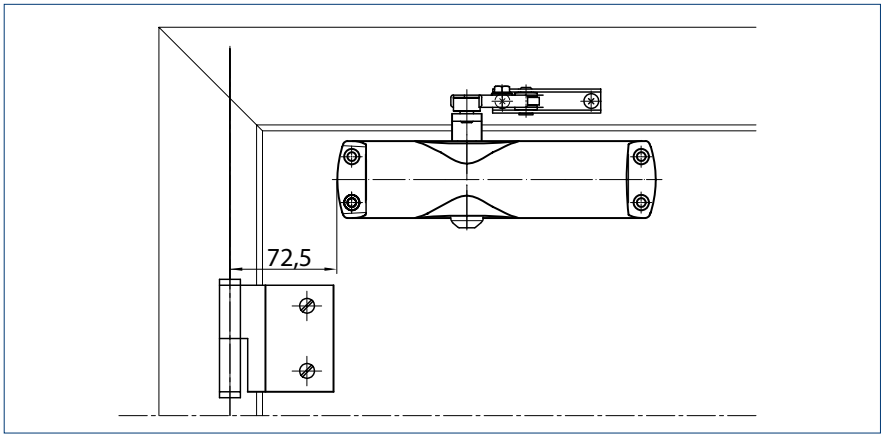

Example for the installation of GEZE TS 1000 C

DIRECT INSTALLATION

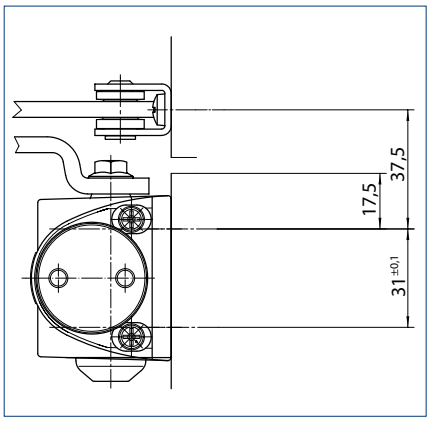

Cross-section = direct installation

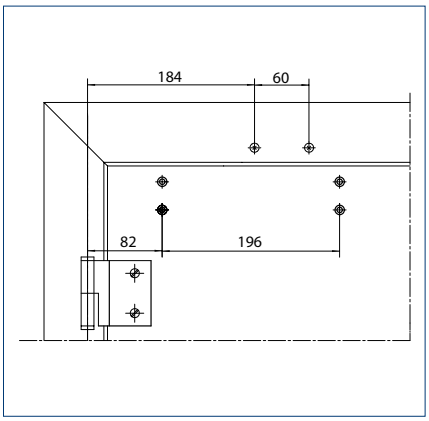

Fitting dimensions for left-hand door

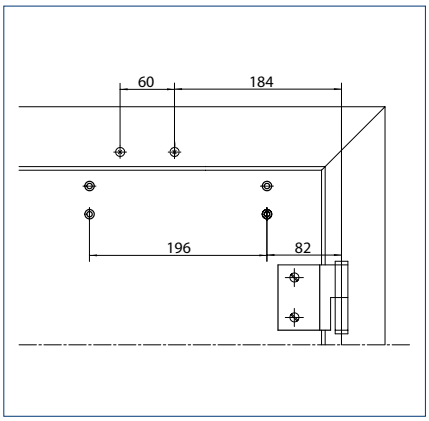

Fitting dimensions for right-hand door

INSTALLATION WITH MOUNTING PLATE

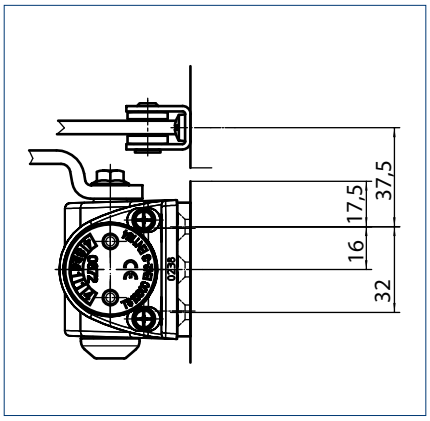

Cross-section = installation with mounting plate

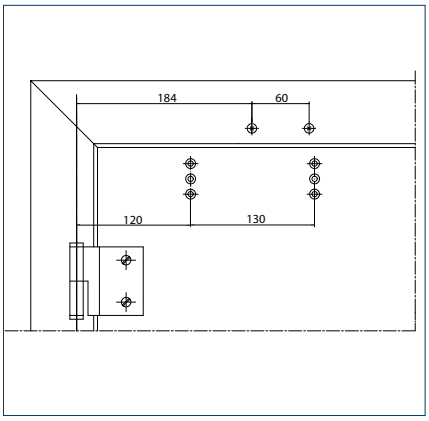

Fitting dimensions for left-hand door

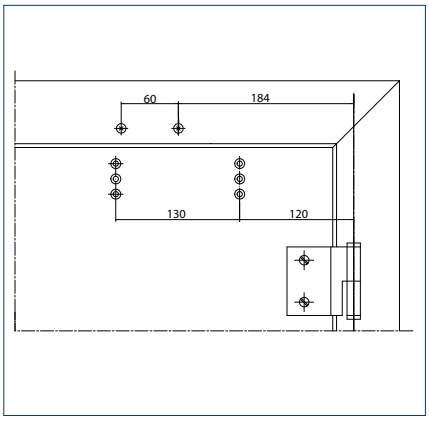

Fitting dimensions for right-hand door

ORDER INFORMATION

Designation	Version	ID no.
GEZE TS 1000 C complete package[2] Closing force EN 2/3, with hold-open linkage	silver-coloured	101771
	white RAL 9016	101773
	black RAL 9005	119574
	brass-coloured	101777
	acc. to RAL[1]	101776
GEZE TS 1000 C complete package Closing force EN 2/3, with link arm	silver-coloured	101765
	white RAL 9016	101767
	black RAL 9005	119573
	brass-coloured	101770
	acc. to RAL[1]	101769
INSTALLATION MATERIAL		
Mounting plate door closer for TS 1000 C	silver-coloured	072019
	white RAL 9016	072021
	black RAL 9005	072022

1 Surcharge for RAL special colours, see General Notes | 2 Not approved for fire and smoke protection doors in Germany

TS 1500

Overhead door closer with link arm for single leaf doors up to 1100 mm leaf width with adjustable closing speed

AREAS OF APPLICATION

- Right and left single-action doors in the interior area
- Single-action doors up to 1100 mm leaf width
- Door leaf installation on hinge side and transom installation on opposite hinge side
- Door leaf installation on the opposite hinge side in parallel arm installation possible

PRODUCT FEATURES

- Variable closing force of EN3 or EN4 by reversing the bearing block
- Can be used for right and left hand doors without conversion
- Hydraulic latching action which accelerates the door shortly before the closed position
- Closing speed can be individually adjusted

SPECIAL VERSION

→ GEZE TS 1500 with hold-open linkage with adjustable hold-open angle of between 70°–150°

TECHNICAL DATA FOR DOOR CLOSER

	TS 1500 door closer
PRODUCT FEATURES	
Closing force acc. to EN 1154	3/4
Leaf width recommended up to	1100 mm
Identical design for DIN left and DIN right	●
Product tested in accordance with	Door closer tested in accordance with EN 1154
Length	177 mm
Overall depth	39 mm
Height	50 mm
FUNCTIONS	
Closing force adjustable	via installation
Closing speed adjustable	●
Latching action adjustable	via valve
Back check integrated	–
Position of closing force adjustment	Installation position

● = yes

PRODUCT SCALE DRAWING

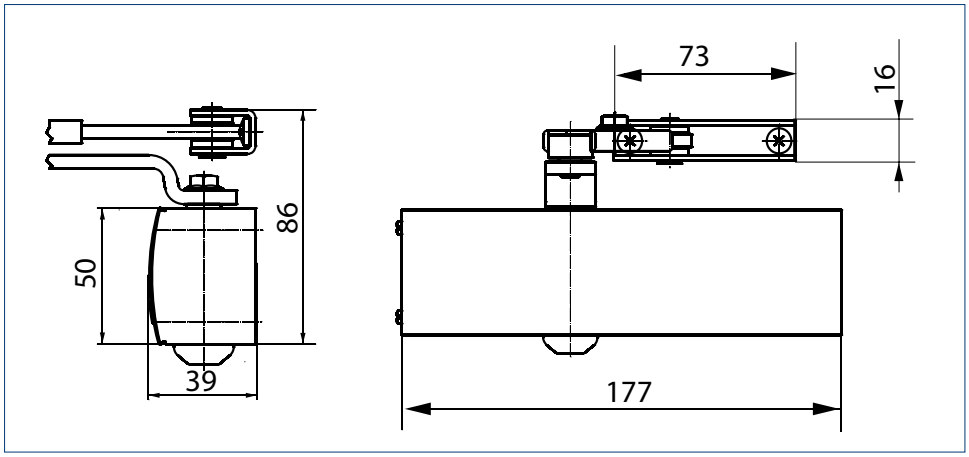

DOOR LEAF INSTALLATION/HINGE SIDE TS 1500

VIEW

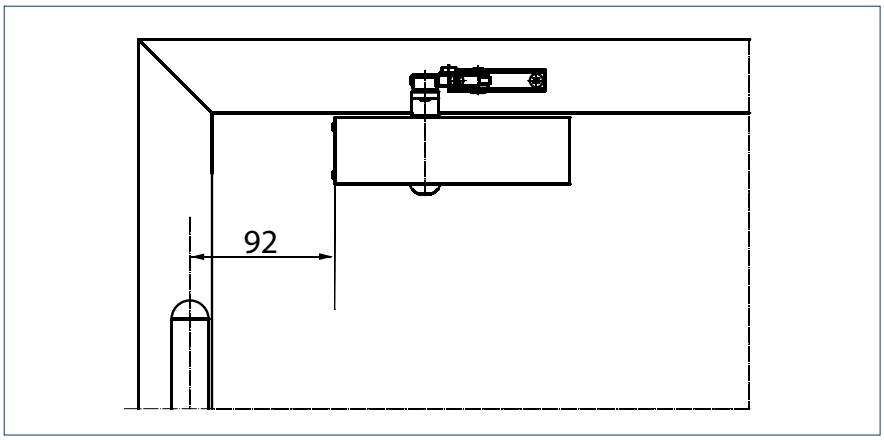

Example for the installation of GEZE TS 1500

DIRECT INSTALLATION

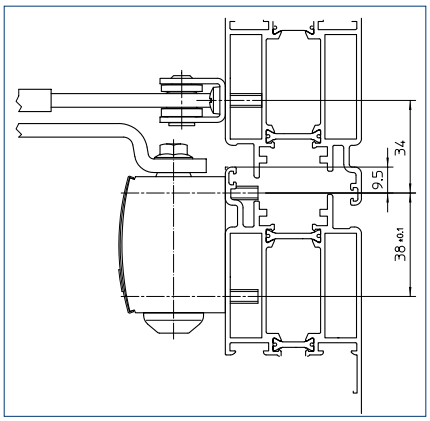

Cross-section = direct installation

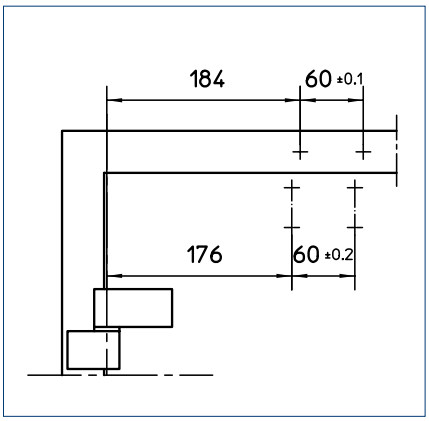

Fitting dimensions for left-hand door

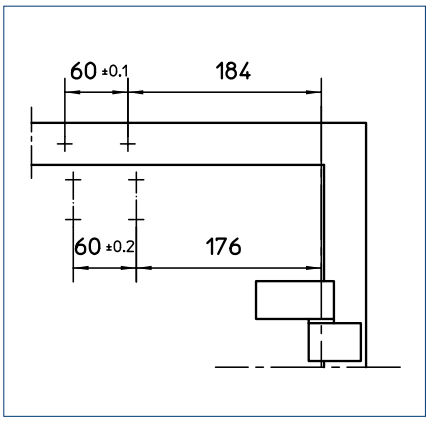

Fitting dimensions for right-hand door

INSTALLATION WITH MOUNTING PLATE

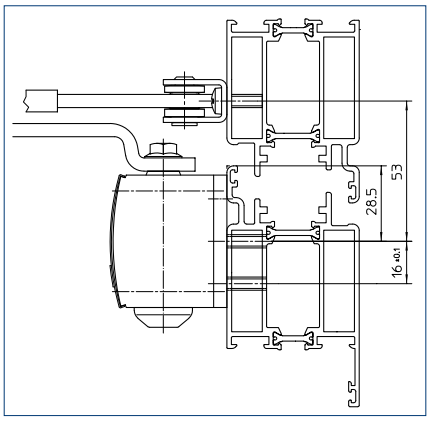

Cross-section = installation with mounting plate

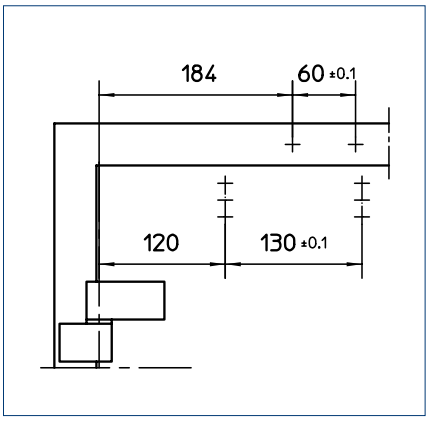

Fitting dimensions for left-hand door

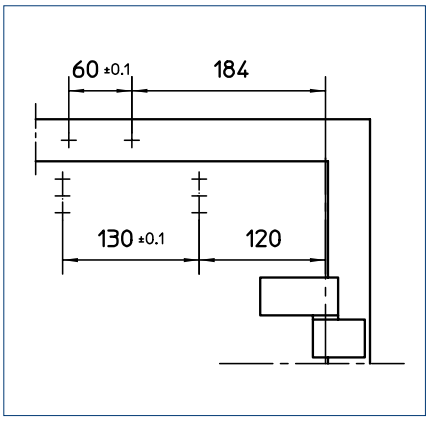

Fitting dimensions for right-hand door

ORDER INFORMATION

Designation	Version	ID no.
GEZE TS 1500 door closer Closing force EN 3/4 (without link arm)	silver-coloured	101792
	white RAL 9016	101794
	acc. to RAL[1]	101875
Link arm TS 1500/1000 C[2] with mechanical holding open	silver-coloured	101815
	white RAL 9016	101817
	acc. to RAL[1]	101818
Link arm TS 1500/1000 C Standard	silver-coloured	101878
	white RAL 9016	101881
	acc. to RAL[1]	101882
INSTALLATION MATERIAL		
Mounting plate door closer for TS 1500	silver-coloured	029682
	white RAL 9016	029685
	acc. to RAL[1]	029686
ACCESSORIES		
Cover cap door closer for TS 1500, can only be used for door leaf installation	silver-coloured	080147
	white RAL 9016	080149
	acc. to RAL[1]	080150

1 Surcharge for RAL special colours, see General Notes I 2 Not approved for fire and smoke protection doors in Germany

TS 2000 NV

Overhead door closer with link arm for single leaf doors up to 1100 mm leaf width with closing force with variable adjustment

AREAS OF APPLICATION

- Fire and smoke protection doors
- Right and left single-action doors
- Single-action doors up to 1100 mm leaf width
- Door leaf installation on hinge side and transom installation on opposite hinge side
- Door leaf installation on the opposite hinge side in parallel arm installation possible

PRODUCT FEATURES

- Closing force of EN2-4 with variable adjustment
- Can be used for right and left hand doors without conversion
- Hydraulic latching action which accelerates the door shortly before the closed position
- Closing speed can be individually adjusted

SPECIAL VERSIONS:

→ GEZE TS 2000 NV BC with hydraulic back check that can be adjusted from the front
→ GEZE TS 2000 NV / NV BC with hold-open linkage with adjustable hold-open angle of between 70° and 150°

TECHNICAL DATA FOR DOOR CLOSER

	TS 2000 NV door closer	TS 2000 NV BC door closer
PRODUCT FEATURES		
Closing force acc. to EN 1154	2 – 4	
Leaf width recommended up to	1100 mm	
Identical design for DIN left and DIN right	●	●
Product tested in accordance with	Door closer tested in accordance with EN 1154	
Suitability for fire protection doors	●	●
Mounting plate with hole pattern in accordance with EN 1154 supplementary sheet	●	●
Length	226 mm	
Overall depth	48 mm	
Height	60 mm	
FUNCTIONS		
Closing force adjustable	with variable adjustment	
Closing speed adjustable	●	●
Latching action adjustable	via valve	
Back check integrated	–	Yes, hydraulically adjustable
Position of closing force adjustment	At the side	
Thermo-constant valves	●	●

● = yes

PRODUCT SCALE DRAWING

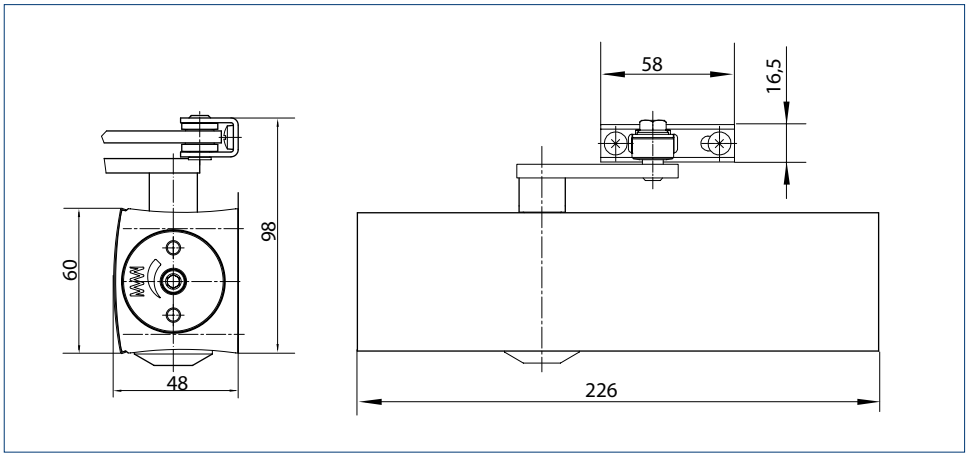

DOOR LEAF INSTALLATION/HINGE SIDE TS 2000 NV/NV BC

VIEW

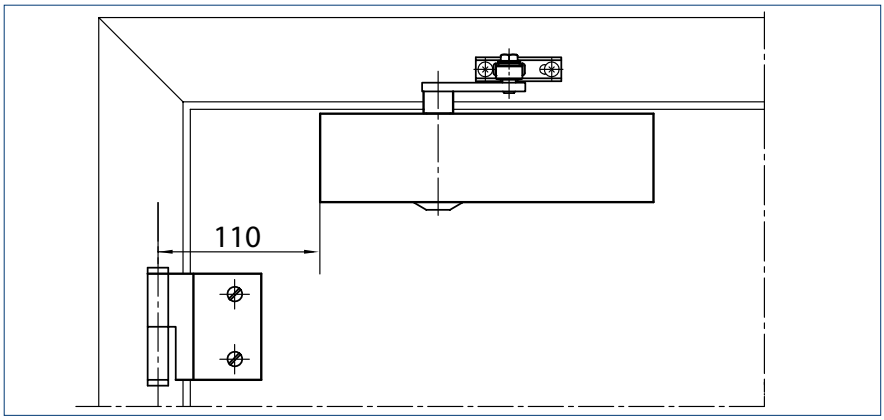

Example for the installation of GEZE TS 2000 NV/NV BC

DIRECT INSTALLATION

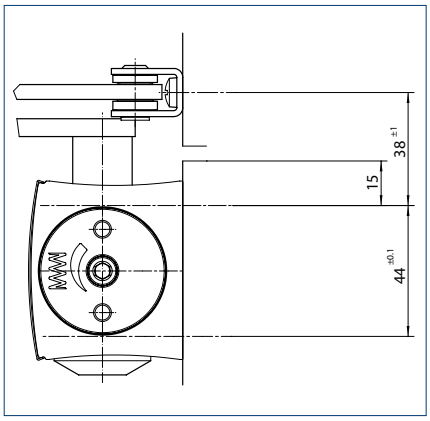

Cross-section = direct installation

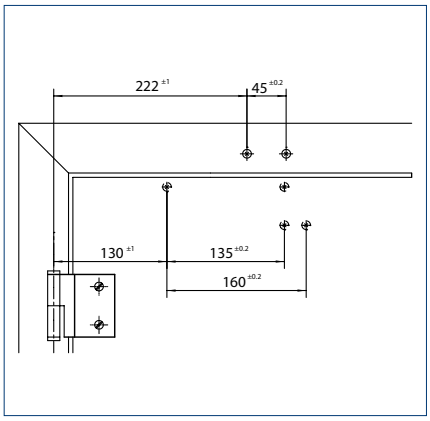

Fitting dimensions for left-hand door

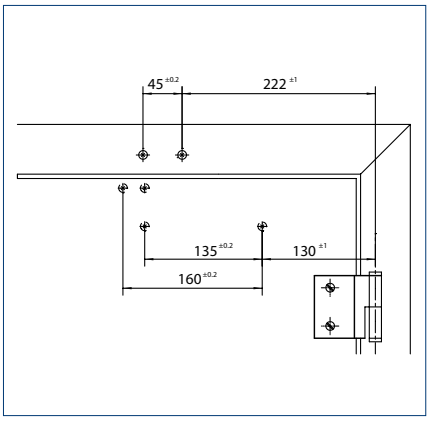

Fitting dimensions for right-hand door

INSTALLATION WITH MOUNTING PLATE

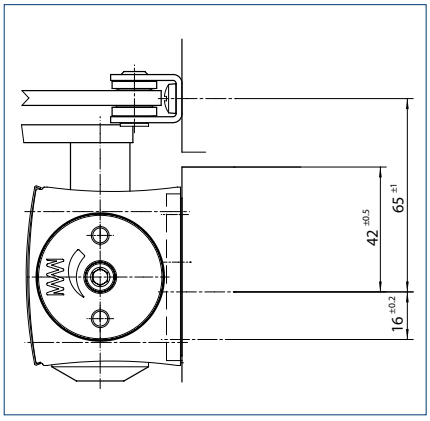

Cross-section = installation with mounting plate

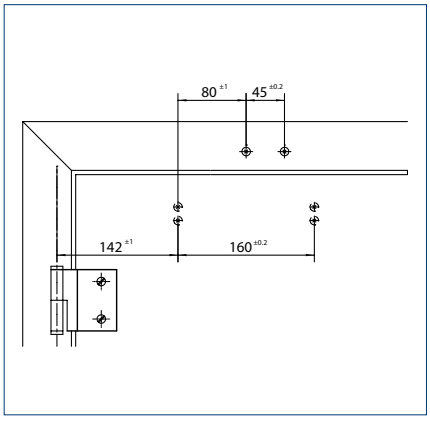

Fitting dimensions for left-hand door

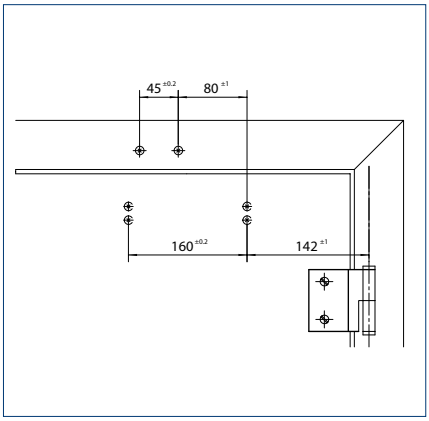

Fitting dimensions for right-hand door

TRANSOM INSTALLATION/OPPOSITE HINGE SIDE TS 2000 NV/NV BC

VIEW

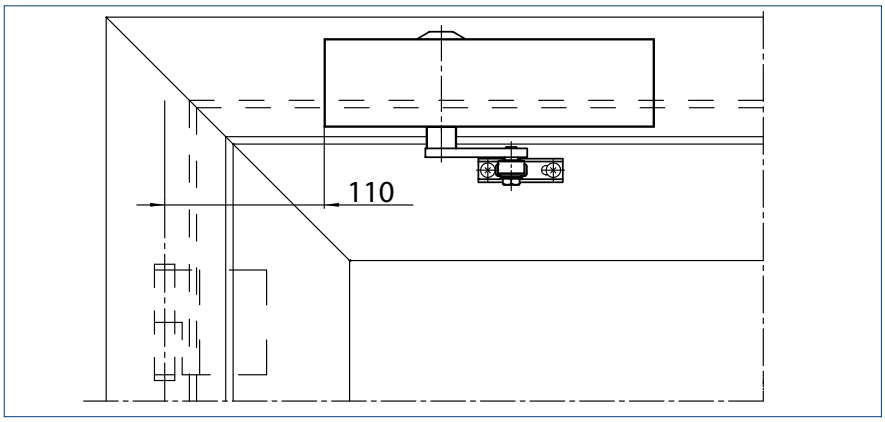

Example for the installation of GEZE TS 2000 NV/NV BC

DIRECT INSTALLATION

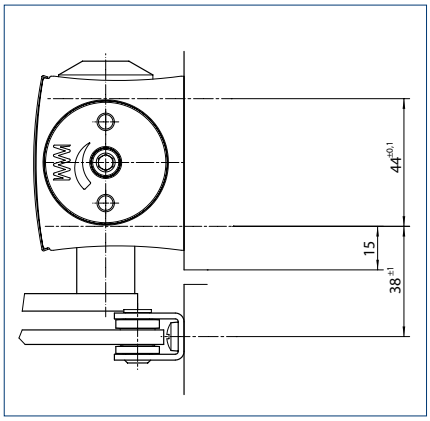

Cross-section = direct installation

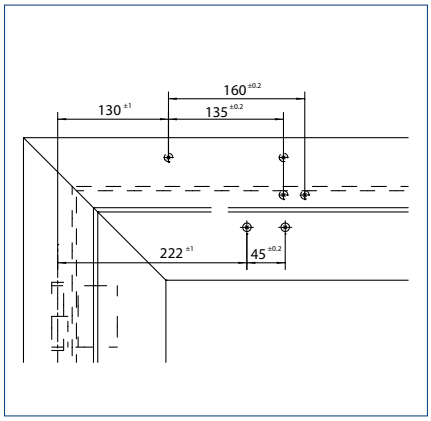

Fitting dimensions for right-hand door

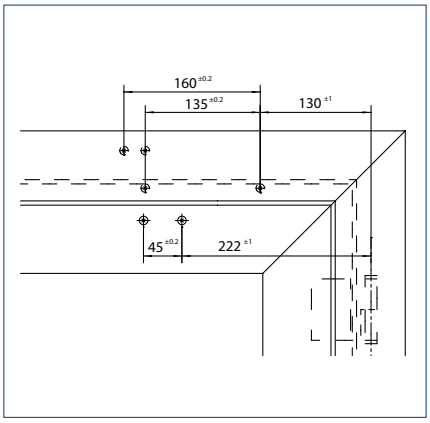

Fitting dimensions for left-hand door

INSTALLATION WITH MOUNTING PLATE

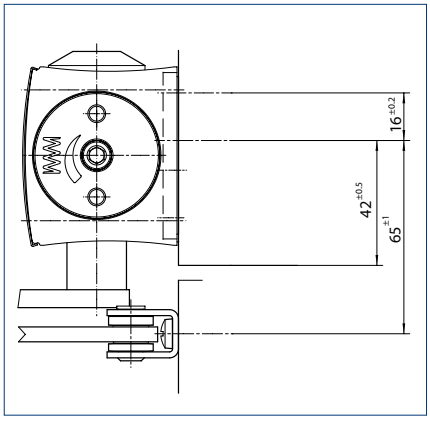

Cross-section = installation with mounting plate

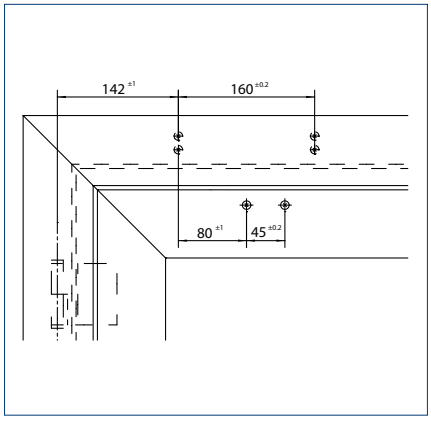

Fitting dimensions for right-hand door

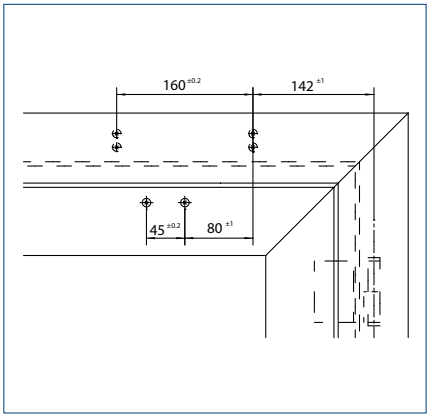

Fitting dimensions for left-hand door

ORDER INFORMATION

Designation		Version	ID no.
GEZE TS 2000 NV door closer Closing force EN 2–4 (without link arm)		silver-coloured	128885
		white RAL 9016	128887
		acc. to RAL[2]	128888
GEZE TS 2000 NV BC door closer Closing force EN 2–4 with back check (without link arm)		silver-coloured	124944
		white RAL 9016	124946
		acc. to RAL[2]	124947
Link arms TS 4000/2000[3] with mechanical holding open		silver-coloured	102454
		white RAL 9016	102456
		acc. to RAL[2]	102457
Link arms TS 4000/2000[3] with mechanical holding open which can be switched on and off		silver-coloured	102445
		white RAL 9016	102447
		acc. to RAL[2]	102448
Link arms TS 4000/2000 Extended, for transom installation with reveal depth between 70–170 mm		silver-coloured	102431
		white RAL 9016	102433
		acc. to RAL[2]	102434
Link arms TS 4000/2000 Standard		silver-coloured	102421
		white RAL 9016	102423
		stainless steel optic[1]	102426
		acc. to RAL[2]	102425
INSTALLATION MATERIAL			
Spindle extension for TS 4000/TS 2000 Crown gearing	10 mm	galvanised	103548
	15 mm	galvanised	103549
	20 mm	galvanised	103550
Drilling template door closer for TS 5000/4000/3000/2000			053134
Glass clamping shoe door closer for TS 3000/TS 2000NV		silver-coloured	014835
		white RAL 9016	014843
		acc. to RAL[2]	014845
Mounting plate and counterplate for all-glass door for TS 3000/ TS 2000NV		silver-coloured	090259
Mounting plate link arm for TS 4000/2000, with slim frames		silver-coloured	057109
		acc. to RAL[2]	082506
Mounting plate link arm for TS 4000/2000, for parallel arm installation		silver-coloured	053318
		acc. to RAL[2]	027460
Mounting plate segmental arched door for TS 2000 NV, arch height max. 130 mm		silver-coloured	127434
		acc. to RAL[2]	127435
Mounting plate door closer for TS 2000 NV & NV BC with hole pattern according to DIN EN 1154 supplementary sheet 1			126234
Lintel casing bracket transom installation BG for TS 2000 NV		silver-coloured	127432
ACCESSORIES			
Cover cap door closer for TS 3000/TS 2000, can only be used for door leaf installation		silver-coloured	013487
		white RAL 9016	014855
		brass	072770
		stainless steel	072769
		acc. to RAL[2]	014856

1 Only for dry rooms | 2 Surcharge for RAL special colours, see General Notes | 3 Not approved for fire and smoke protection doors in Germany

TS 4000 EN 1–6

Overhead door closer with link arm for single leaf doors up to 1400 mm leaf width

AREAS OF APPLICATION

- Fire and smoke protection doors
- Right and left single-action doors
- Single-action doors up to 1400 mm leaf width
- Door leaf installation on hinge side and transom installation on opposite hinge side
- Door leaf installation on the opposite hinge side in parallel arm installation possible

PRODUCT FEATURES

- Closing force of EN1–6 with variable adjustment
- Can be used for right and left hand doors without conversion
- Mechanical latching action which accelerates the door shortly before the closed position
- Closing speed can be individually adjusted
- Integrated back check, slows down doors that are thrown open forcefully
- Visual closing force display for easy control of the setting
- All functions can be adjusted from the front (except latching action)

SPECIAL VERSIONS:

- GEZE TS 4000 with hold-open linkage, , hold-open angle up to 150° (must not be used on fire and smoke protection doors)
- GEZE TS 4000 S with delayed closing of up to 30 seconds, adjustable from the front (delayed closing not effective with transom installation on opposite hinge side)

TECHNICAL DATA FOR DOOR CLOSER

	TS 4000 door closer	TS 4000 S door closer
PRODUCT FEATURES		
Closing force acc. to EN 1154	1 – 6	
Leaf width recommended up to	1400 mm	
Identical design for DIN left and DIN right	●	●
Product tested in accordance with	Door closer tested in accordance with EN 1154	
Suitability for fire protection doors	●	●
Mounting plate with hole pattern in accordance with EN 1154 supplementary sheet	●	●
Length	287 mm	
Overall depth	46 mm	
Height	60 mm	
FUNCTIONS		
Closing force adjustable	with variable adjustment	
Closing speed adjustable	●	●
Latching action adjustable	via link arm	via valve
Back check integrated	hydraulically adjustable	
Delayed closing integrated	○	●
Position of closing force adjustment	Front	
Visual closing force display	●	●
Safety valve to prevent wilful damage	●	●
Thermo-constant valves	●	●

● = yes | ○ = no

PRODUCT SCALE DRAWING

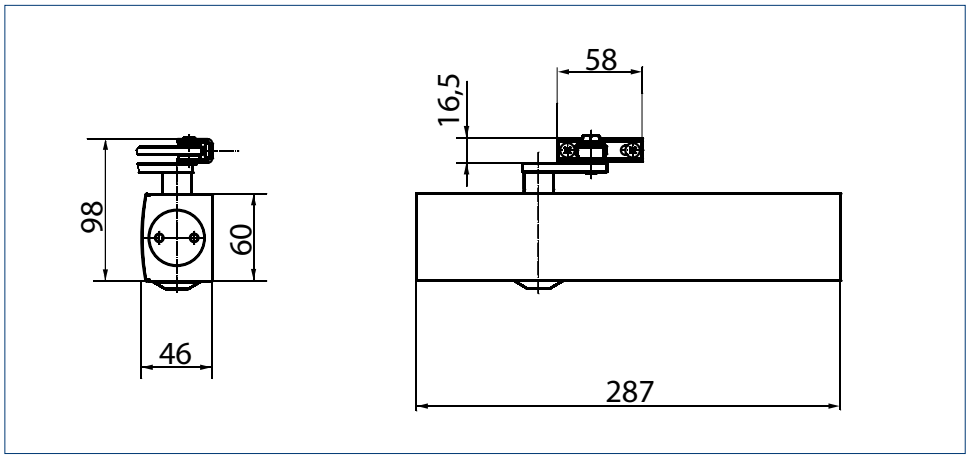

DOOR LEAF INSTALLATION/HINGE SIDE TS 4000

VIEW

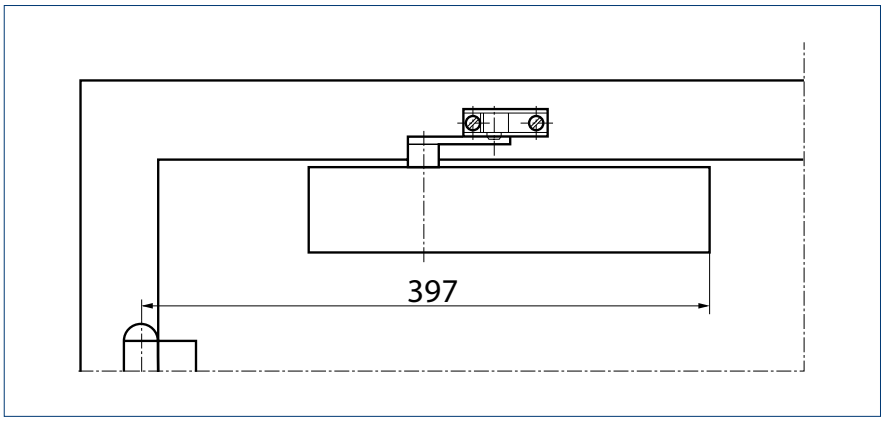

Example for the installation of GEZE TS 4000 1-6, TS 4000 S

DIRECT INSTALLATION

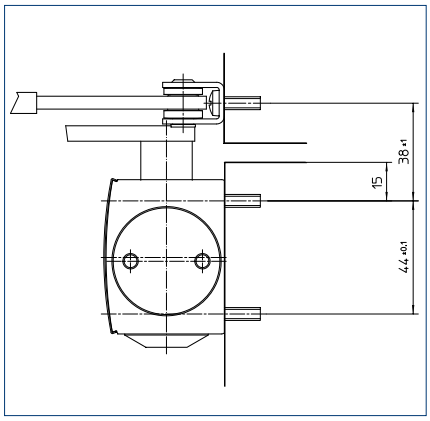

Cross-section = direct installation

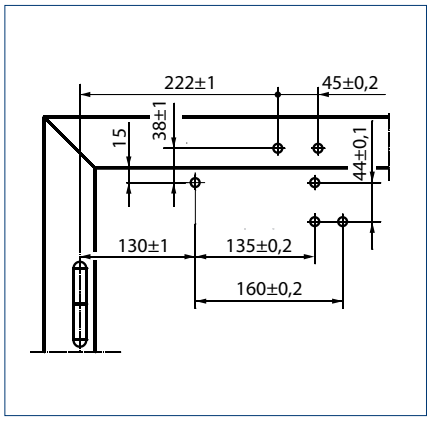

Fitting dimensions for left-hand door

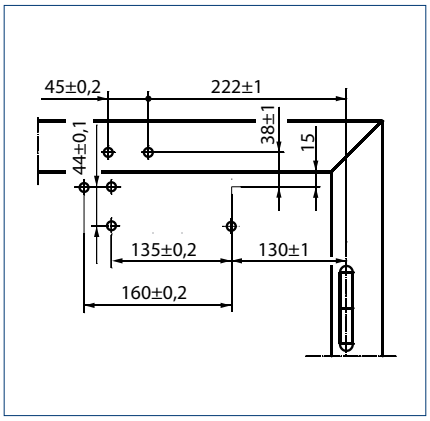

Fitting dimensions for right-hand door

INSTALLATION WITH MOUNTING PLATE

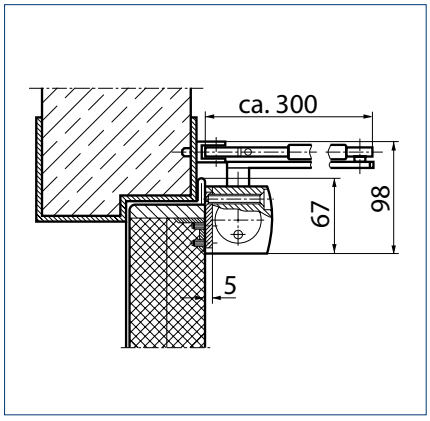

Cross-section = installation with mounting plate

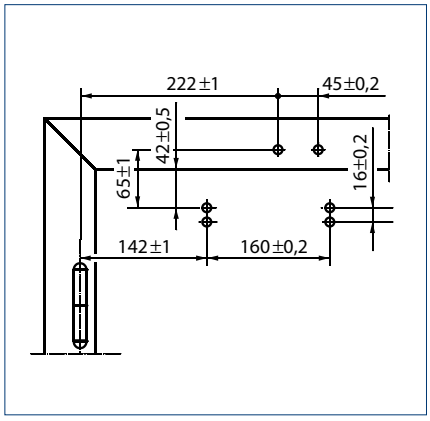

Fitting dimensions for left-hand door

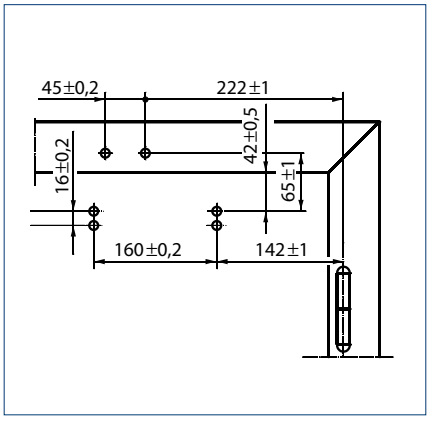

Fitting dimensions for right-hand door

TRANSOM INSTALLATION/OPPOSITE HINGE SIDE TS 4000

VIEW

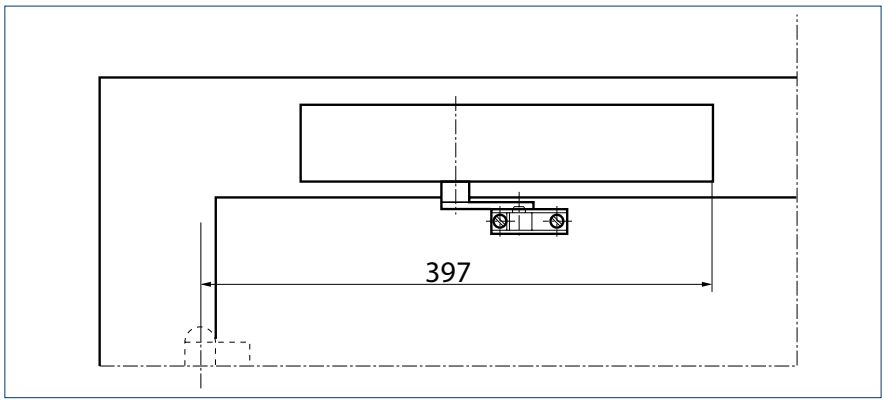

Example for the installation of GEZE TS 4000 1-6, TS 4000 S

DIRECT INSTALLATION

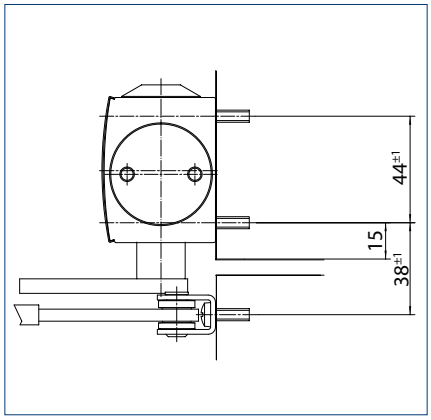

Cross-section = direct installation

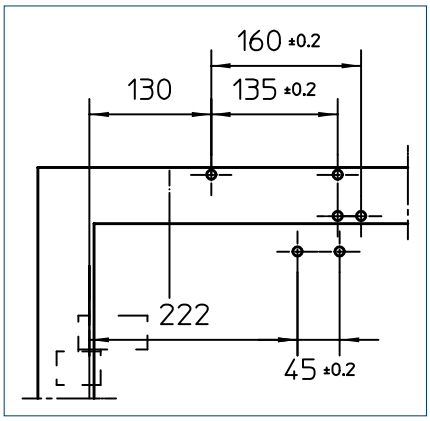

Fitting dimensions for right-hand door

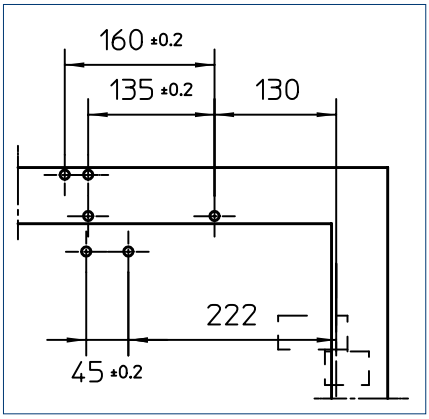

Fitting dimensions for left-hand door

INSTALLATION WITH MOUNTING PLATE

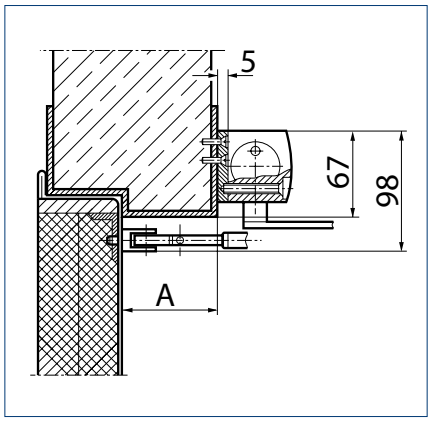

Cross-section = installation with mounting plate
A = max. 70 mm reveal depth for fire and smoke protection doors

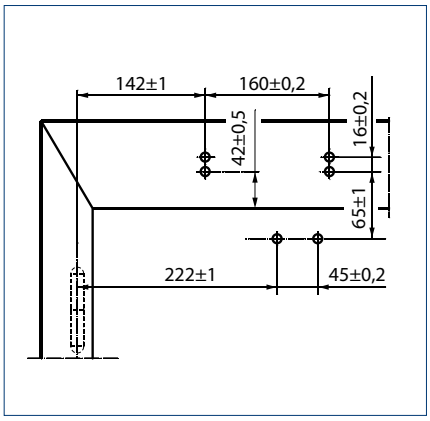

Fitting dimensions for right-hand door

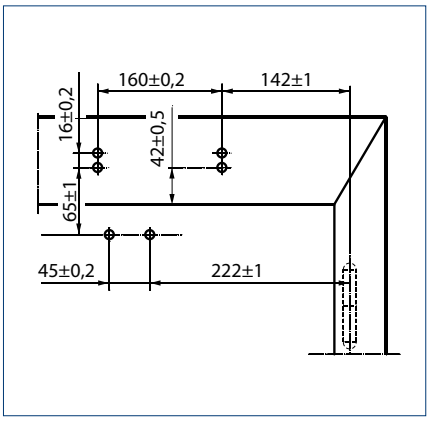

Fitting dimensions for left-hand door

ORDER INFORMATION

Designation	Version	ID no.
GEZE TS 4000 door closer Closing force EN 1–6 with back check (without link arm)	silver-coloured	102789
	white RAL 9016	102791
	acc. to RAL[2]	102792
GEZE TS 4000 S door closer Closing force EN 1–6 with delayed closing and back check (without link arm)	silver-coloured	107745
	white RAL 9016	107747
	acc. to RAL[2]	107748
Link arms TS 4000/2000[3] with mechanical holding open	silver-coloured	102454
	white RAL 9016	102456
	acc. to RAL[2]	102457
Link arms TS 4000/2000[3] with mechanical holding open which can be switched on and off	silver-coloured	102445
	white RAL 9016	102447
	acc. to RAL[2]	102448
Link arms TS 4000/2000 Extended, for transom installation with reveal depth between 70–170 mm	silver-coloured	102431
	white RAL 9016	102433
	acc. to RAL[2]	102434
Link arms TS 4000/2000 Standard	silver-coloured	102421
	white RAL 9016	102423
	stainless steel optic[1]	102426
	acc. to RAL[2]	102425

1) Only for dry rooms I 2 Surcharge for RAL special colours, see General Notes I 3 Not approved for fire and smoke protection doors in Germany

Designation		Version	ID no.
INSTALLATION MATERIAL			
Spindle extension for TS 4000/TS 2000 Crown gearing	10 mm	galvanised	103548
	15 mm	galvanised	103549
	20 mm	galvanised	103550
Drilling template door closer for TS 5000/4000/3000/2000			053134
Glass clamping shoe door closer for TS 5000/TS 4000		silver-coloured	057126
		white RAL 9016	009491
		acc. to RAL[2]	009494
Mounting plate and counterplate for all-glass door for TS 5000/TS 4000		silver-coloured	007923
		acc. to RAL[2]	007926
Mounting plate link arm for TS 4000/2000, with slim frames		silver-coloured	057109
		acc. to RAL[2]	082506
Mounting plate link arm for TS 4000/2000, for parallel arm installation		silver-coloured	053318
		acc. to RAL[2]	027460
Mounting plate segmental arched door for TS 4000, arch height max. 130 mm		silver-coloured	058782
		acc. to RAL[2]	119472
Mounting plate door closer for TS 5000/TS 4000 with hole pattern according to DIN EN 1154 supplementary sheet 1		silver-coloured	049185
		white RAL 9016	068627
		galvanised	057956
		acc. to RAL[2]	029176
Lintel casing bracket transom installation BG for TS 5000/TS 4000		silver-coloured	049240
		acc. to RAL[2]	104451
ACCESSORIES			
Cover cap door closer for TS 5000/TS 4000, can only be used for door leaf installation		silver-coloured	067724
		white RAL 9016	067726
		brass	072698
		stainless steel	072696
		acc. to RAL[2]	000756

2 Surcharge for RAL special colours, see General Notes

TS 4000 EN 5–7

Overhead door closer with link arm for single leaf doors up to 1600 mm leaf width

AREAS OF APPLICATION

- Fire and smoke protection doors
- Right and left single-action doors
- Single-action doors up to 1600 mm leaf width
- Door leaf installation on hinge side and transom installation on opposite hinge side
- Door leaf installation on the opposite hinge side in parallel arm installation possible

PRODUCT FEATURES

- Closing force of EN5–7 with variable adjustment
- Can be used for right and left hand doors without conversion
- Mechanical latching action which accelerates the door shortly before the closed position
- Closing speed can be individually adjusted
- Integrated back check, slows down doors that are thrown open forcefully
- Visual closing force display for easy control of the setting
- All functions can be adjusted from the front (except latching action)

SPECIAL VERSIONS:

→ GEZE TS 4000 with hold-open linkage, , hold-open angle up to 150° (must not be used on fire and smoke protection doors, hold-open unit only effective up to closing force EN 6)

TECHNICAL DATA FOR DOOR CLOSER

	TS 4000 door closer
PRODUCT FEATURES	
Closing force acc. to EN 1154	5 – 7
Leaf width recommended up to	1600 mm
Identical design for DIN left and DIN right	●
Product tested in accordance with	Door closer tested in accordance with EN 1154
Suitability for fire protection doors	●
Mounting plate with hole pattern in accordance with EN 1154 supplementary sheet	●
Length	287 mm
Overall depth	46 mm
Height	60 mm
FUNCTIONS	
Closing force adjustable	with variable adjustment
Closing speed adjustable	●
Latching action adjustable	via link arm
Back check integrated	hydraulically adjustable
Position of closing force adjustment	Front
Visual closing force display	●
Safety valve to prevent wilful damage	●
Thermo-constant valves	●

● = yes

PRODUCT SCALE DRAWING

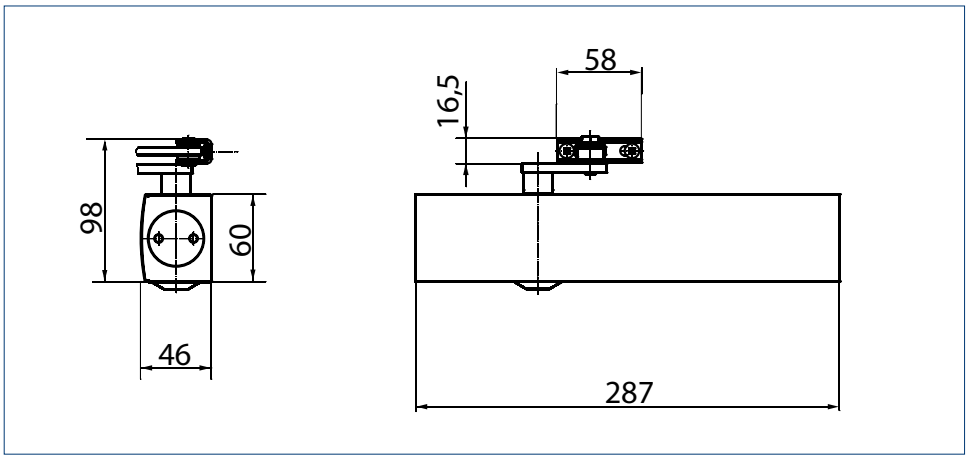

DOOR LEAF INSTALLATION/HINGE SIDE TS 4000 CLOSING FORCE 5–7

VIEW

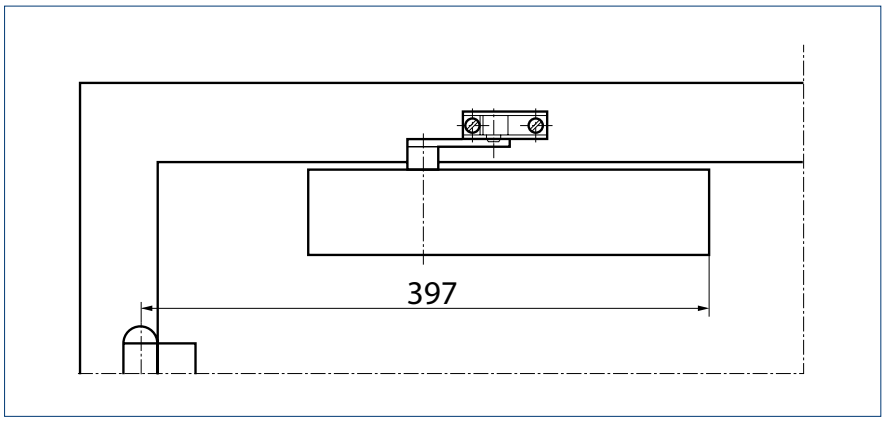

Example for the installation of GEZE TS 4000 5–7

DIRECT INSTALLATION

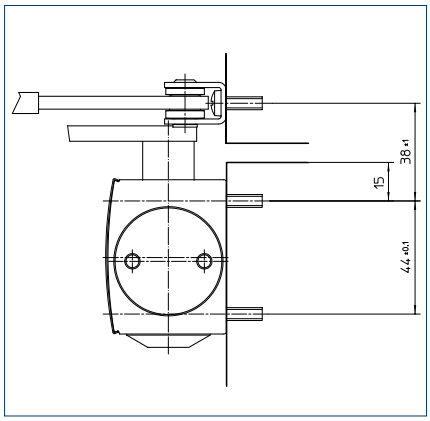

Cross-section = direct installation

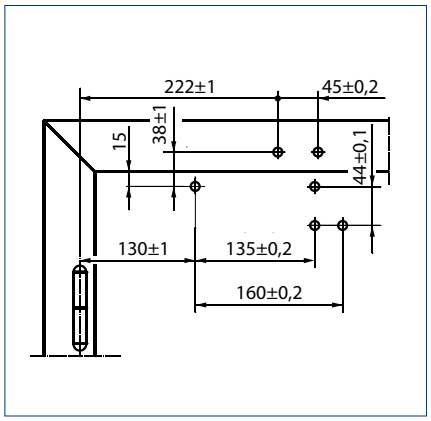

Fitting dimensions for left-hand door

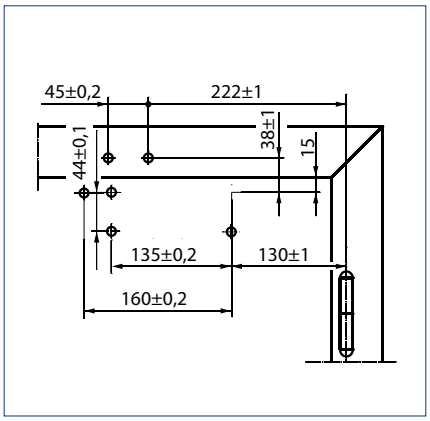

Fitting dimensions for right-hand door

INSTALLATION WITH MOUNTING PLATE

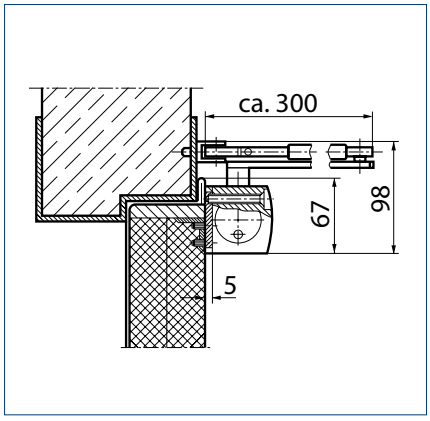

Cross-section = installation with mounting plate

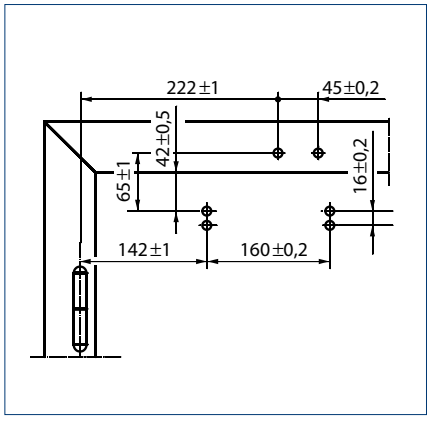

Fitting dimensions for left-hand door

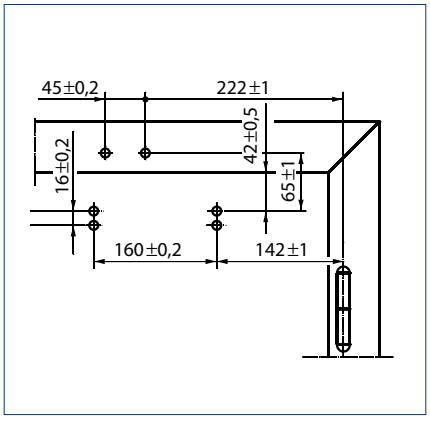

Fitting dimensions for right-hand door

TRANSOM INSTALLATION/OPPOSITE HINGE SIDE TS 4000 CLOSING FORCE 5–7

VIEW

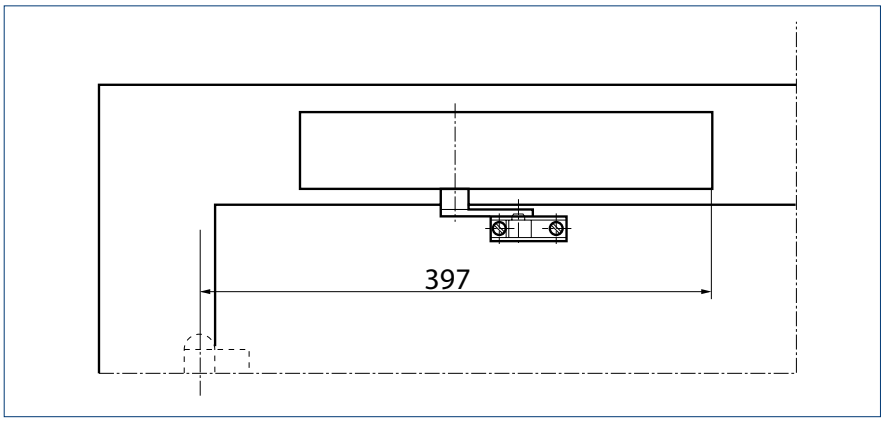

Example for the installation of GEZE TS 4000 5–7

DIRECT INSTALLATION

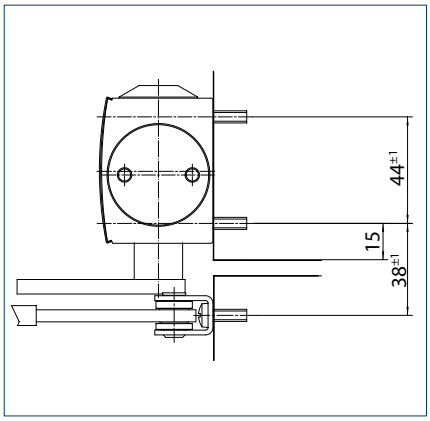

Cross-section = direct installation

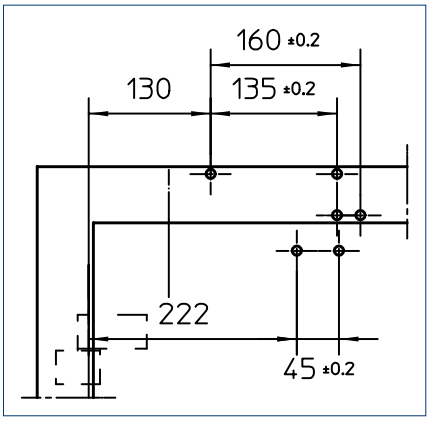

Fitting dimensions for right-hand door

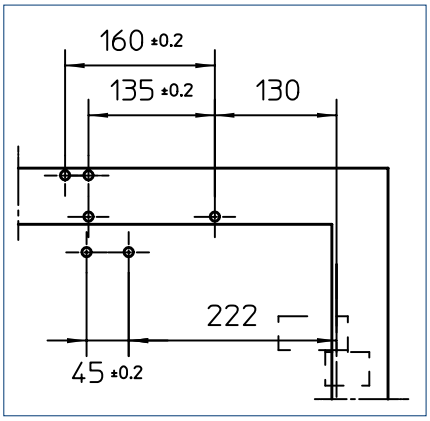

Fitting dimensions for left-hand door

INSTALLATION WITH MOUNTING PLATE

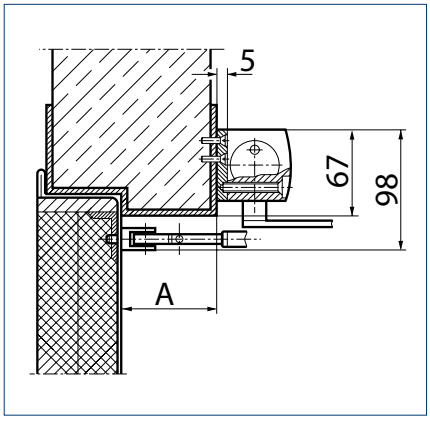

Cross-section = installation with mounting plate
A = max. 70 mm reveal depth for fire and smoke protection doors

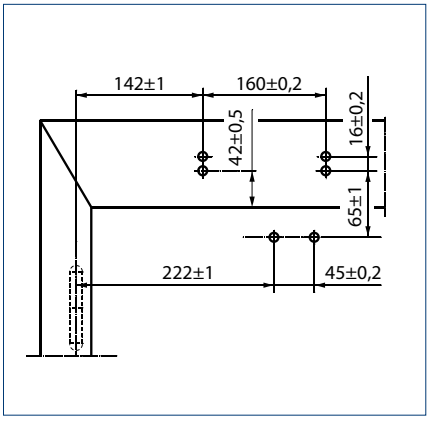

Fitting dimensions for right-hand door

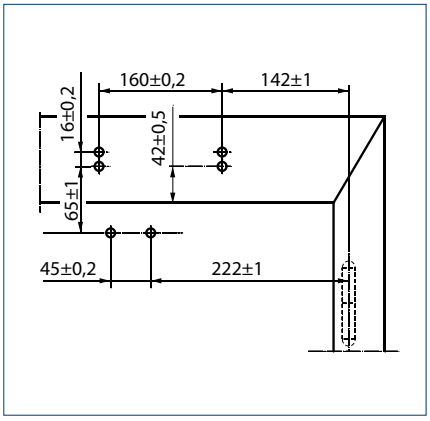

Fitting dimensions for left-hand door

ORDER INFORMATION

Designation		Version	ID no.
GEZE TS 4000 door closer Closing force EN 5–7 with back check (without link arm)		silver-coloured	102837
		acc. to RAL[2]	102838
Link arms TS 4000/2000[3] with mechanical holding open		silver-coloured	102454
		white RAL 9016	102456
		acc. to RAL[2]	102457
Link arms TS 4000/2000[3] with mechanical holding open which can be switched on and off		silver-coloured	102445
		white RAL 9016	102447
		acc. to RAL[2]	102448
Link arms TS 4000/2000 Extended, for transom installation with reveal depth between 70–170 mm		silver-coloured	102431
		white RAL 9016	102433
		acc. to RAL[2]	102434
Link arms TS 4000/2000 Standard		silver-coloured	102421
		white RAL 9016	102423
		stainless steel optic[1]	102426
		acc. to RAL[2]	102425
INSTALLATION MATERIAL			
Spindle extension for TS 4000/TS 2000 Crown gearing	10 mm	galvanised	103548
	15 mm	galvanised	103549
	20 mm	galvanised	103550
Drilling template door closer for TS 5000/4000/3000/2000			053134
Glass clamping shoe door closer for TS 5000/TS 4000		silver-coloured	057126
		white RAL 9016	009491
		acc. to RAL[2]	009494
Mounting plate and counterplate for all-glass door for TS 5000/TS 4000		silver-coloured	007923
		acc. to RAL[2]	007926
Mounting plate link arm for TS 4000/2000, with slim frames		silver-coloured	057109
		acc. to RAL[2]	082506
Mounting plate link arm for TS 4000/2000, for parallel arm installation		silver-coloured	053318
		acc. to RAL[2]	027460
Mounting plate segmental arched door for TS 4000, arch height max. 130 mm		silver-coloured	058782
		acc. to RAL[2]	119472
Mounting plate door closer for TS 5000/TS 4000 with hole pattern according to DIN EN 1154 supplementary sheet 1		silver-coloured	049185
		white RAL 9016	068627
		galvanised	057956
		acc. to RAL[2]	029176
Lintel casing bracket transom installation BG for TS 5000/TS 4000		silver-coloured	049240
		acc. to RAL[2]	104451
ACCESSORIES			
Cover cap door closer for TS 5000/TS 4000, can only be used for door leaf installation		silver-coloured	067724
		white RAL 9016	067726
		brass	072698
		stainless steel	072696
		acc. to RAL[2]	000756

1 Only for dry rooms | 2 Surcharge for RAL special colours, see General Notes | 3 Not approved for fire and smoke protection doors in Germany

TS 4000 E

Overhead door closer with link arm for single leaf doors up to 1400 mm leaf width with electric hold-open device

AREAS OF APPLICATION

- Fire and smoke protection doors
- Right and left single-action doors
- Single-action doors up to 1400 mm leaf width
- Door leaf installation on hinge side and transom installation on opposite hinge side

PRODUCT FEATURES

- Closing force of EN1-6 with variable adjustment
- Operating voltage 24 V DC
- Can be used for right and left hand doors without conversion
- Electrical hold-open device with hold-open area from 80°-175°
- Electric hold-open device acc. to EN 1155 for hold-open systems
- Mechanical latching action which accelerates the door shortly before the closed position
- Closing speed can be individually adjusted
- Visual closing force display for easy control of the setting
- All functions can be adjusted from the front (except latching action)

SPECIAL VERSION:

→ GEZE TS 4000 E / transom installation opposite hinge side 24 V DC

TECHNICAL DATA FOR DOOR CLOSER

	TS 4000 E door closer
PRODUCT FEATURES	
Closing force acc. to EN 1154	1 – 6
Leaf width recommended up to	1400 mm
Identical design for DIN left and DIN right	●
Supply voltage	24 V DC
IP rating	IP43
Product tested in accordance with	Door closer tested in accordance with EN 1154 Hold-open device tested in accordance with EN1155
Suitability for fire protection doors	●
Mounting plate with hole pattern in accordance with EN 1154 supplementary sheet	●
Length	325 mm
Overall depth	46 mm
Height	60 mm
FUNCTIONS	
Closing force adjustable	with variable adjustment
Closing speed adjustable	●
Latching action adjustable	via link arm
Back check integrated	–
Position of closing force adjustment	Front
Visual closing force display	●
Safety valve to prevent wilful damage	●
Thermo-constant valves	●
Hold-open unit integrated	Electrical
Hold-open angle	80°–175°
Hold-open unit can be overridden	●

● = yes

PRODUCT SCALE DRAWING

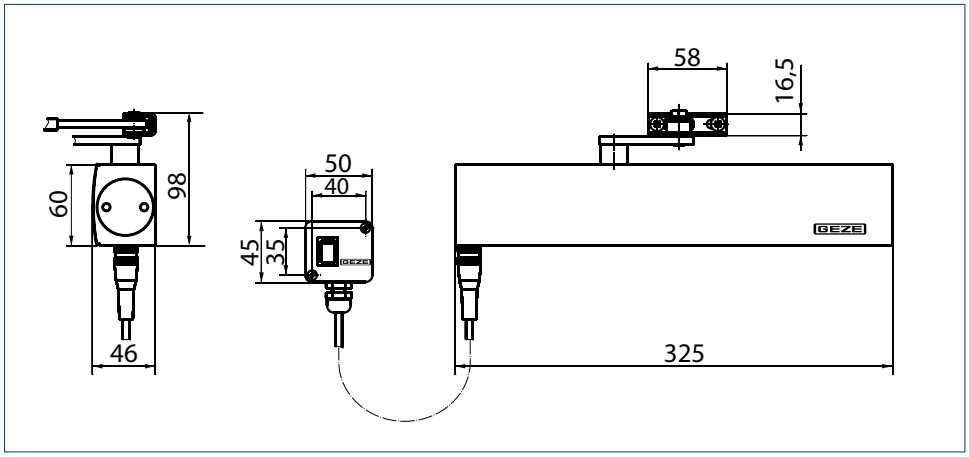

DOOR LEAF INSTALLATION/HINGE SIDE TS 4000 E

VIEW

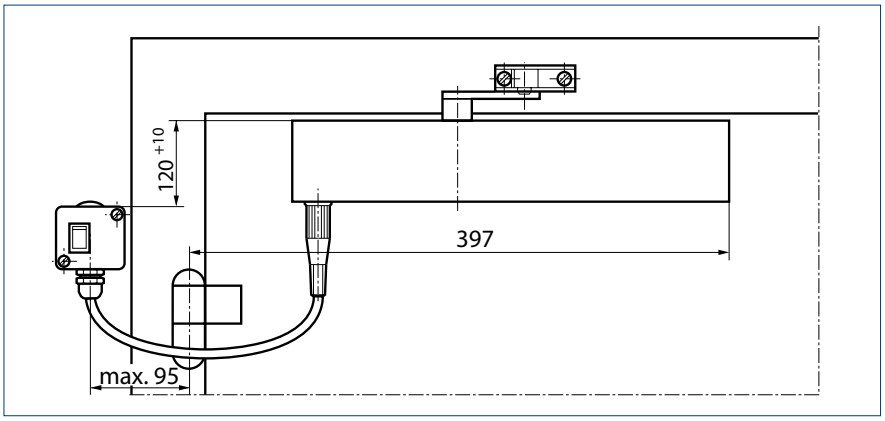

Example for the installation of GEZE TS 4000 E

DIRECT INSTALLATION

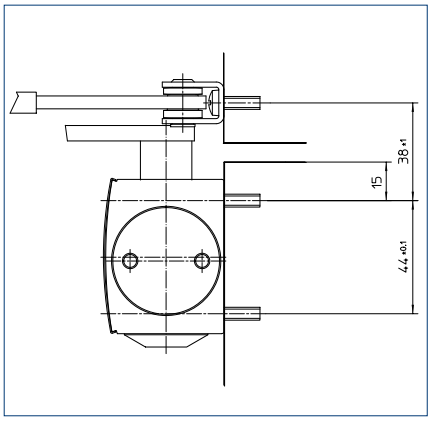

Cross-section = direct installation

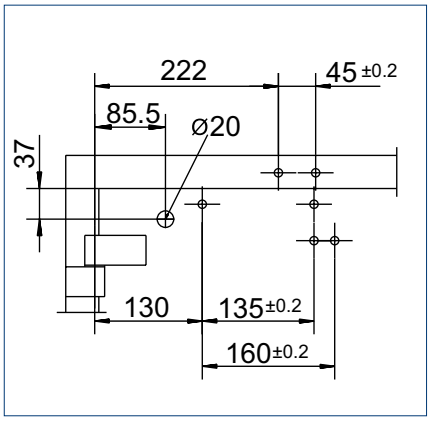

Fitting dimensions for left-hand door

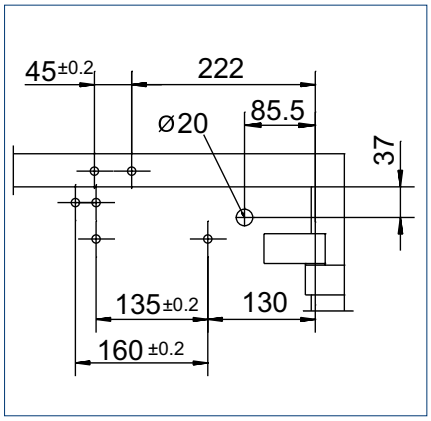

Fitting dimensions for right-hand door

INSTALLATION WITH MOUNTING PLATE

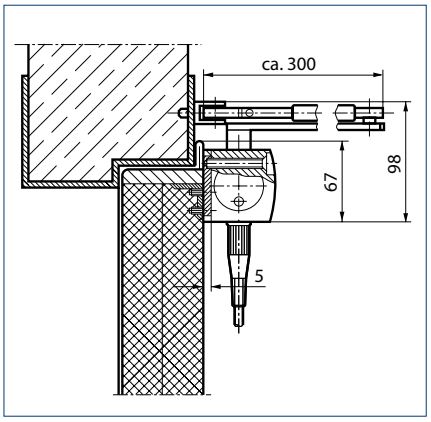

Cross-section = installation with mounting plate

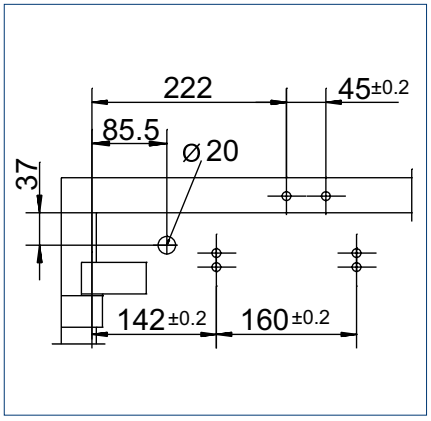

Fitting dimensions for left-hand door

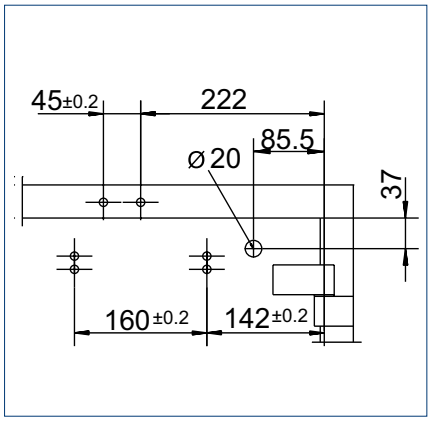

Fitting dimensions for right-hand door

TRANSOM INSTALLATION/OPPOSITE HINGE SIDE TS 4000 E

VIEW

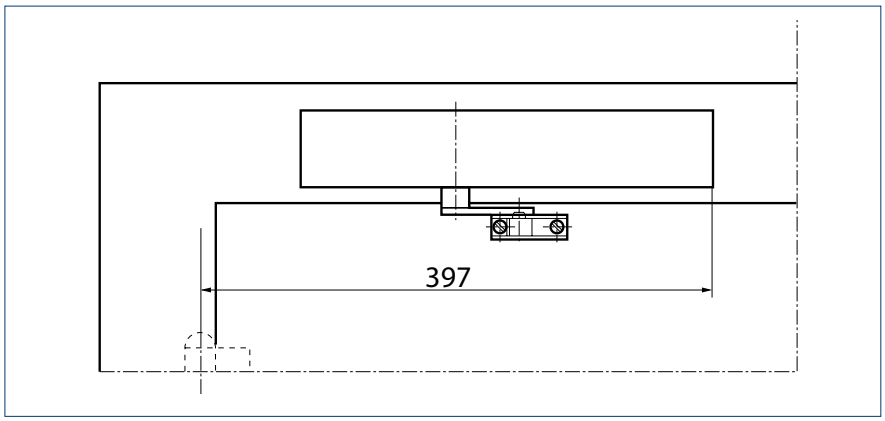

Example for the installation of GEZE TS 4000 E

DIRECT INSTALLATION

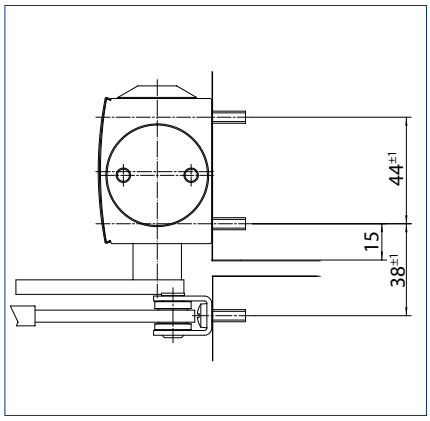

Cross-section = direct installation

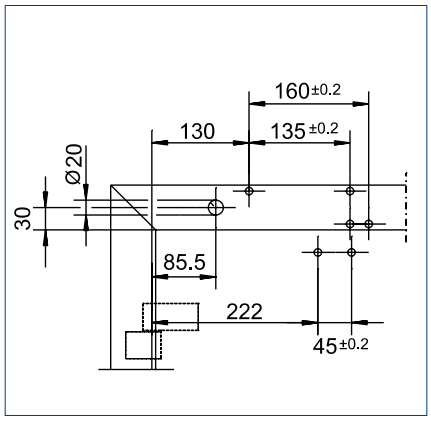

Fitting dimensions for right-hand door

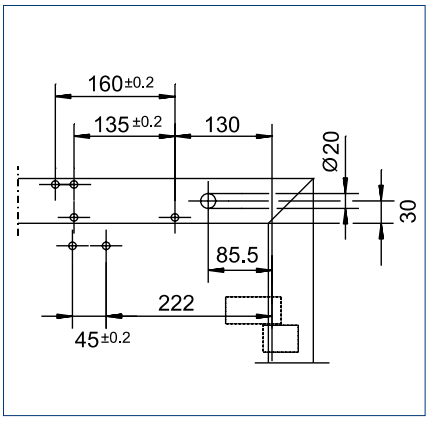

Fitting dimensions for left-hand door

INSTALLATION WITH MOUNTING PLATE

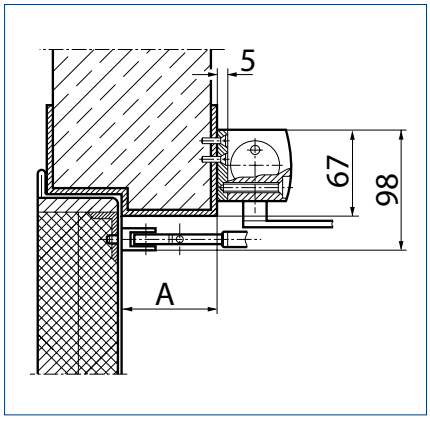

Cross-section = installation with mounting plate
A = max. 70 mm reveal depth for fire and smoke protection doors

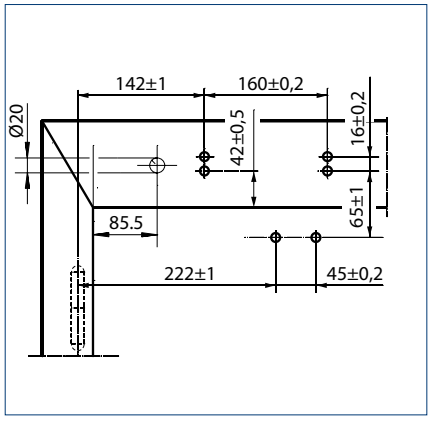

Fitting dimensions for right-hand door

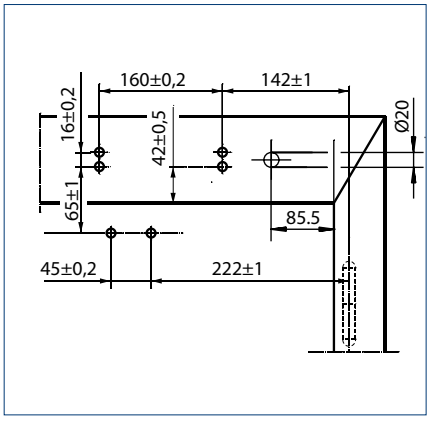

Fitting dimensions for left-hand door

ORDER INFORMATION

Designation		Version	ID no.
GEZE TS 4000 E door closer Closing force EN 1-6, door leaf installation hinge side, with electric hold-open device and connector box (without link arm)		silver-coloured	105211
		acc. to RAL[2]	105212
GEZE TS 4000 E KM BG door closer Closing force EN 1-6, transom installation opposite hinge side, with electric hold-open device (without link arm)		silver-coloured	105213
		acc. to RAL[2]	105214
Link arms TS 4000/2000 Extended, for transom installation with reveal depth between 70-170 mm		silver-coloured	102431
		white RAL 9016	102433
		acc. to RAL[2]	102434
Link arms TS 4000/2000 Standard		silver-coloured	102421
		white RAL 9016	102423
		stainless steel optic[1]	102426
		acc. to RAL[2]	102425
INSTALLATION MATERIAL			
Spindle extension for TS 4000/TS 2000 Crown gearing	10 mm	galvanised	103548
	15 mm	galvanised	103549
	20 mm	galvanised	103550
Drilling template door closer for TS 5000/4000/3000/2000			053134
Mounting plate link arm for TS 4000/2000, with slim frames		silver-coloured	057109
		acc. to RAL[2]	082506
Mounting plate link arm for TS 4000/2000, for parallel arm installation		silver-coloured	053318
		acc. to RAL[2]	027460
Mounting plate door closer for TS 5000 EFS/RFS/EHY/ 4000 E with hole pattern according to DIN EN 1154 supplementary sheet 1		silver-coloured	059107
		acc. to RAL[2]	100044
ACCESSORIES			
RSZ 7 smoke switch control unit Smoke switch control unit for all GEZE hold-open devices		silver-coloured	181025
		white RAL 9016	184195
		stainless steel optic[1]	184196
		acc. to RAL[2]	185231
GC 170 Wireless KIT FA Set consisting of: 1 piece GC 171 wireless module for the wireless extension of GEZE hold-open systems			195524
GC 171 wireless module for the wireless connection of wireless components (GC 172 wireless smoke detector; GC 173 wireless thermal detector; GC 175 wireless input module) on GEZE hold-open systems		anthracite	163051
GC 172 wireless smoke detector for the wireless connection to GEZE hold-open systems, battery-operated with 8 years battery lifetime, with base, tested in accordance with EN 54-7 and EN 54-25, general construction technique permit for use with all GEZE hold-open systems		white RAL 9016	195522
GC 173 wireless thermal detector for the wireless connection to GEZE hold-open systems, battery-operated with 8 years battery lifetime, with base, tested in accordance with EN 54-7 and EN 54-25, general construction technique permit for use with all GEZE hold-open systems		white RAL 9016	195523
GEZE GC 175 wireless input module for wireless connection of manual trigger switches to the GEZE GC 171 wireless module, applicable for all GEZE hold-open systems		black	163068
GEZE GC 152 smoke detector Complete with base, 24 V DC, 20 mA, tested in accordance with EN54-7, with general official building approval for use with all GEZE hold-open systems, integrated line monitoring, conform with DIN EN 14637		white	139850
		acc. to RAL[2]	170523
GEZE GC 153 thermal detector Complete with base, 24 V DC, 20 mA, tested in accordance with EN54-5, with general official building approval for use with all GEZE hold-open systems, integrated line monitoring, conform with DIN EN 14637		white	139881
		acc. to RAL[2]	170524
GEZE AS 500 manual trigger switch Flush-mounted version for the manual release of electrically controlled hold-open devices including terminating resistor for line monitoring		alpine white/red	116266
GEZE AS 500 manual trigger switch with glass pane and 5 interchangeable labels Flush-mounted version for the manual release of electrically controlled hold-open devices including terminating resistor for line monitoring		alpine white/red	120880
Replacement glass pane for GEZE manual trigger switch 120880 and 120881			010994

1 Only for dry rooms | 2 Surcharge for RAL special colours, see General Notes

TS 4000 R

Overhead door closer with link arm with electric hold-open device and smoke switch

AREAS OF APPLICATION

- Fire and smoke protection doors
- Right and left single-action doors
- Single-action doors up to 1400 mm leaf width
- Transom installation opposite hinge side
- Hold-open systems with integrated hold-open unit

PRODUCT FEATURES

- Closing force of EN1-6 with variable adjustment
- Operating voltage 230 V AC
- Can be used for right and left hand doors without conversion
- Integrated smoke switch control unit, with a signal that closes the door automatically in the event of a fire
- Smoke switch with contamination indicator and adaption of the alarm threshold
- Additional smoke detectors can be fitted
- Electric hold-open device acc. to EN 1155 for hold-open systems
- Electrical hold-open device with hold-open area from 80°-175°
- Mechanical latching action which accelerates the door shortly before the closed position
- Closing speed can be individually adjusted
- Visual closing force display for easy control of the setting
- All functions can be adjusted from the front (except latching action)

TECHNICAL DATA FOR DOOR CLOSER

	TS 4000 R KM BG door closer
PRODUCT FEATURES	
Closing force acc. to EN 1154	1 – 6
Leaf width recommended up to	1400 mm
Identical design for DIN left and DIN right	●
Supply voltage	230 V 50 Hz
IP rating	IP20
Product tested in accordance with	Door closer tested in accordance with EN 1154 Hold-open device tested in accordance with EN1155 General official building approval from DIBt as a hold-open system
Suitability for fire protection doors	●
Mounting plate with hole pattern in accordance with EN 1154 supplementary sheet	●
Length	547 mm
Overall depth	65 mm
Height	65 mm
FUNCTIONS	
Closing force adjustable	with variable adjustment
Closing speed adjustable	●
Latching action adjustable	via link arm
Back check integrated	–
Position of closing force adjustment	Front
Visual closing force display	●
Safety valve to prevent wilful damage	●
Thermo-constant valves	●
Hold-open unit integrated	Electrical
Hold-open unit can be overridden	●
Integrated smoke switch	●
with visual operating state display	●
with contamination indicator	●
with adaption of the alarm threshold	●
integrated power supply	●

● = yes

PRODUCT SCALE DRAWING

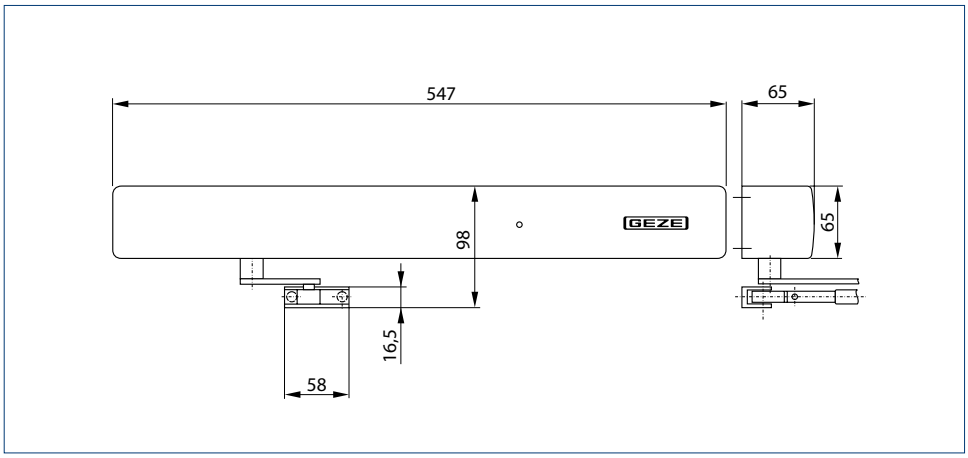

TRANSOM INSTALLATION/OPPOSITE HINGE SIDE TS 4000 R

VIEW

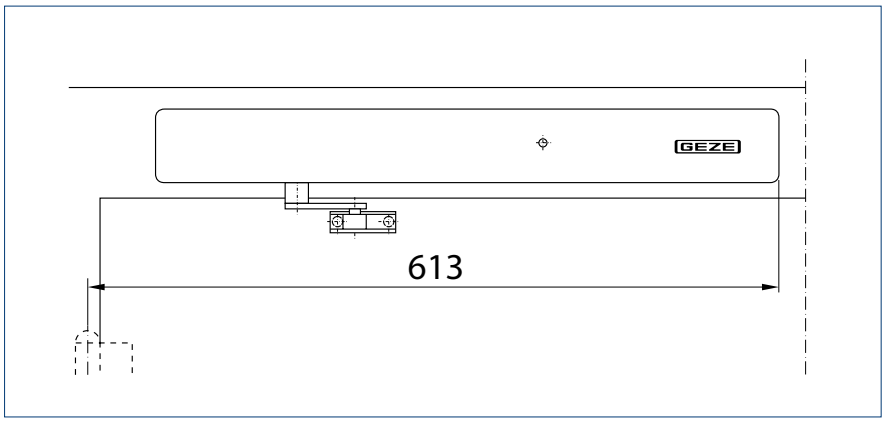

Example for the installation of GEZE TS 4000 E

DIRECT INSTALLATION

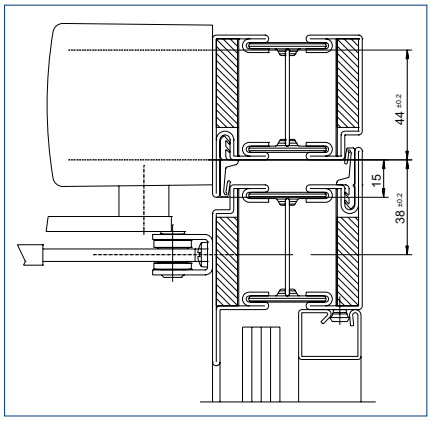

Cross-section = direct installation

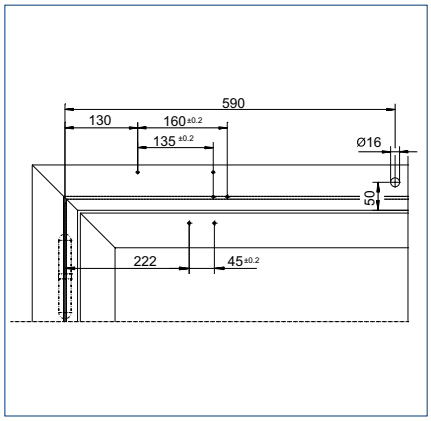

Fitting dimensions for right-hand door

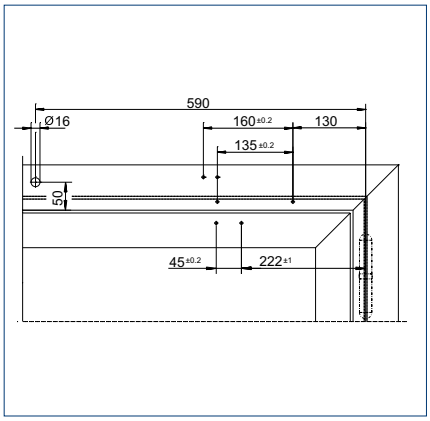

Fitting dimensions for left-hand door

INSTALLATION WITH MOUNTING PLATE

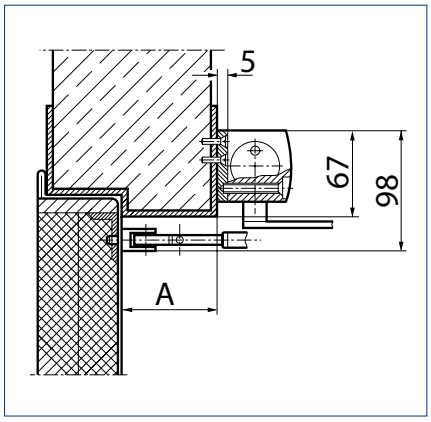

Cross-section = installation with mounting plate
A = max. 70 mm reveal depth for fire and smoke protection doors

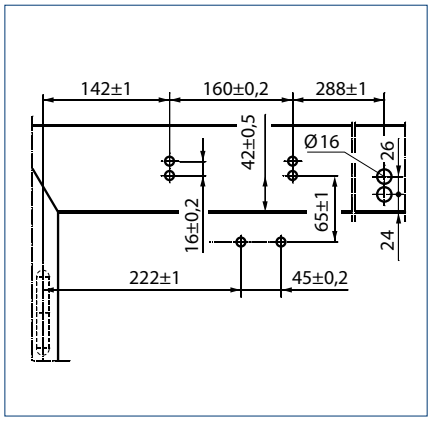

Fitting dimensions for right-hand door

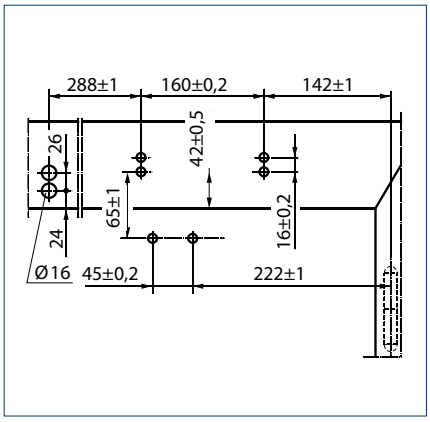

Fitting dimensions for left-hand door

ORDER INFORMATION

Designation		Version	ID no.
GEZE TS 4000 R KM BG door closer Closing force EN 1–6, transom installation opposite hinge side, with electric hold-open device and integrated smoke switch control unit (without link arm)		silver-coloured	105241
		acc. to RAL[2]	105242
Link arms TS 4000/2000 Extended, for transom installation with reveal depth between 70–170 mm		silver-coloured	102431
		white RAL 9016	102433
		acc. to RAL[2]	102434
Link arms TS 4000/2000 Standard		silver-coloured	102421
		white RAL 9016	102423
		stainless steel optic[1]	102426
		acc. to RAL[2]	102425
INSTALLATION MATERIAL			
Spindle extension for TS 4000/TS 2000 Crown gearing	10 mm	galvanised	103548
	15 mm	galvanised	103549
	20 mm	galvanised	103550
Mounting plate door closer for TS 5000 RFS KM/4000 R & R-IS with hole pattern according to DIN EN 1154 supplementary sheet 1		black	058808
ACCESSORIES			
GC 170 Wireless KIT FA Set consisting of: 1 piece GC 171 wireless module for the wireless extension of GEZE hold-open systems			195524
GC 171 wireless module for the wireless connection of wireless components (GC 172 wireless smoke detector; GC 173 wireless thermal detector; GC 175 wireless input module) on GEZE hold-open systems		anthracite	163051
GC 172 wireless smoke detector for the wireless connection to GEZE hold-open systems, battery-operated with 8 years battery lifetime, with base, tested in accordance with EN 54-7 and EN 54-25, general construction technique permit for use with all GEZE hold-open systems		white RAL 9016	195522
GC 173 wireless thermal detector for the wireless connection to GEZE hold-open systems, battery-operated with 8 years battery lifetime, with base, tested in accordance with EN 54-7 and EN 54-25, general construction technique permit for use with all GEZE hold-open systems		white RAL 9016	195523
GEZE GC 175 wireless input module for wireless connection of manual trigger switches to the GEZE GC 171 wireless module, applicable for all GEZE hold-open systems		black	163068
GEZE GC 152 smoke detector Complete with base, 24V DC, 20 mA, tested in accordance with EN54-7, with general official building approval for use with all GEZE hold-open systems, integrated line monitoring, conform with DIN EN 14637		white	139850
		acc. to RAL[2]	170523
GEZE GC 153 thermal detector Complete with base, 24 V DC, 20 mA, tested in accordance with EN54-5, with general official building approval for use with all GEZE hold-open systems, integrated line monitoring, conform with DIN EN 14637		white	139881
		acc. to RAL[2]	170524
GEZE AS 500 manual trigger switch Flush-mounted version for the manual release of electrically controlled hold-open devices including terminating resistor for line monitoring		alpine white/red	116266
GEZE AS 500 manual trigger switch with glass pane and 5 interchangeable labels Flush-mounted version for the manual release of electrically controlled hold-open devices including terminating resistor for line monitoring		alpine white/red	120880
Replacement glass pane for GEZE manual trigger switch 120880 and 120881			010994

1 Only for dry rooms | 2 Surcharge for RAL special colours, see General Notes

TS 4000 Tandem

Overhead door closer with link arm for single leaf doors/gates with a leaf width greater than 1600 mm

AREAS OF APPLICATION

- Fire and smoke protection doors
- Right and left single-action doors
- Single-action doors from 1600 mm leaf width and very high weight
- Door leaf installation on hinge side and transom installation on opposite hinge side
- Door leaf installation on the opposite hinge side in parallel arm installation possible

PRODUCT FEATURES

- System consisting of two door closers TS 4000 EN5-7 and TS 4000 EN1-6
- Closing force from EN7 with variable adjustment
- Can be used for right and left hand doors with conversion
- Mechanical latching action which accelerates the door shortly before the closed position
- Closing speed can be individually adjusted
- Integrated back check, slows down doors that are thrown open forcefully
- Visual closing force display for easy control of the setting

TECHNICAL DATA FOR DOOR CLOSER

	TS 4000 Tandem complete package
PRODUCT FEATURES	
Identical design for DIN left and DIN right	●
Product tested in accordance with	Door closer tested in accordance with EN 1154
Suitability for fire protection doors	●
Mounting plate with hole pattern in accordance with EN 1154 supplementary sheet	●
Length	287 mm
Overall depth	51 mm
Height	130 mm
FUNCTIONS	
Closing force adjustable	with variable adjustment
Closing speed adjustable	●
Latching action adjustable	via link arm
Back check integrated	hydraulically adjustable
Position of closing force adjustment	Front
Visual closing force display	●
Safety valve to prevent wilful damage	●
Thermo-constant valves	●

● = yes

PRODUCT SCALE DRAWING

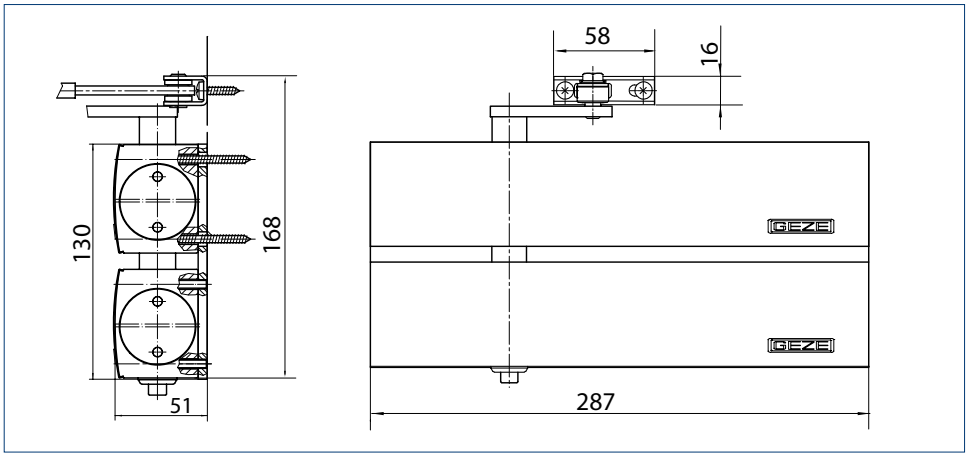

DOOR LEAF INSTALLATION/HINGE SIDE TS 4000 TANDEM

VIEW

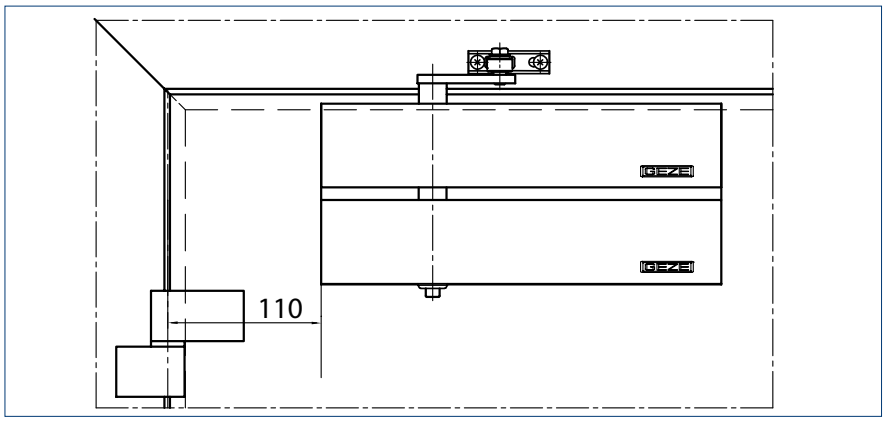

Example for the installation of GEZE TS 4000 Tandem

DIRECT INSTALLATION

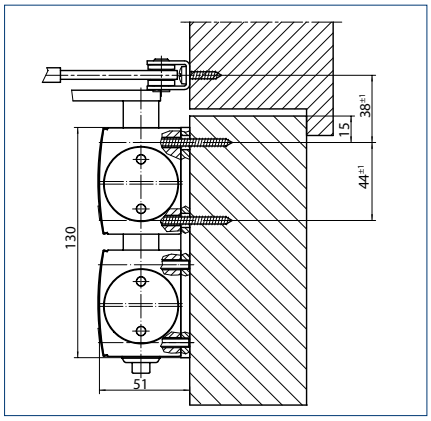

Cross-section = direct installation

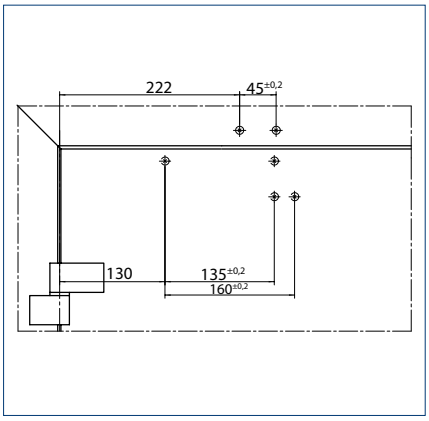

Fitting dimensions for left-hand door

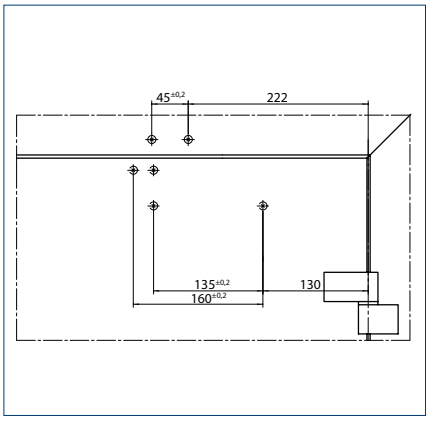

Fitting dimensions for right-hand door

INSTALLATION WITH MOUNTING PLATE

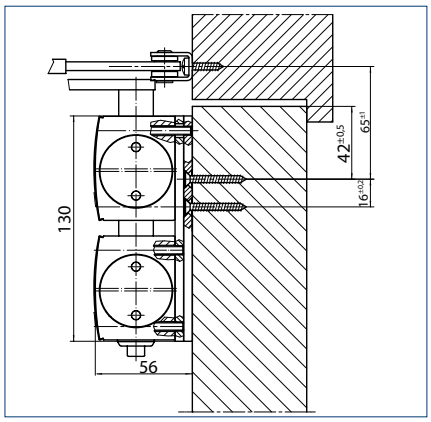

Cross-section = installation with mounting plate

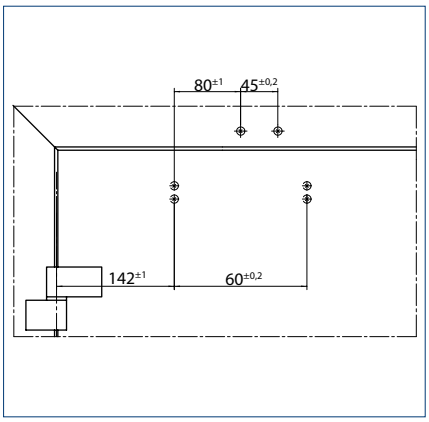

Fitting dimensions for left-hand door

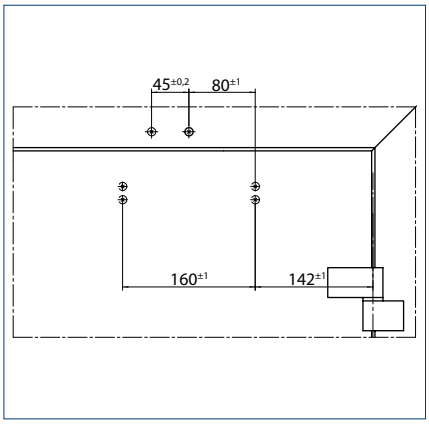

Fitting dimensions for right-hand door

ORDER INFORMATION

Designation		Version	ID no.
GEZE TS 4000 Tandem complete package with back check, with regular link arm		silver-coloured	102841
		acc. to RAL[1]	116186
Link arms TS 4000/2000 Extended, for transom installation with reveal depth between 70–170 mm		silver-coloured	102431
		white RAL 9016	102433
		acc. to RAL[1]	102434
INSTALLATION MATERIAL			
Spindle extension for TS 4000/TS 2000 Crown gearing	10 mm	galvanised	103548
	15 mm	galvanised	103549
	20 mm	galvanised	103550
Drilling template door closer for TS 5000/4000/3000/2000			053134
Mounting plate link arm for TS 4000/2000, with slim frames		silver-coloured	057109
		acc. to RAL[1]	082506
Mounting plate link arm for TS 4000/2000, for parallel arm installation		silver-coloured	053318
		acc. to RAL[1]	027460
Mounting plate door closer for TS 4000 Tandem with hole pattern according to DIN EN 1154 supplementary sheet 1		silver-coloured	105119
		acc. to RAL[1]	116189

1 Surcharge for RAL special colours, see General Notes

TS 4000, Medisch Spectrum Twente, Netherlands (Photo: Erwin Kamphuis / GEZE GmbH)

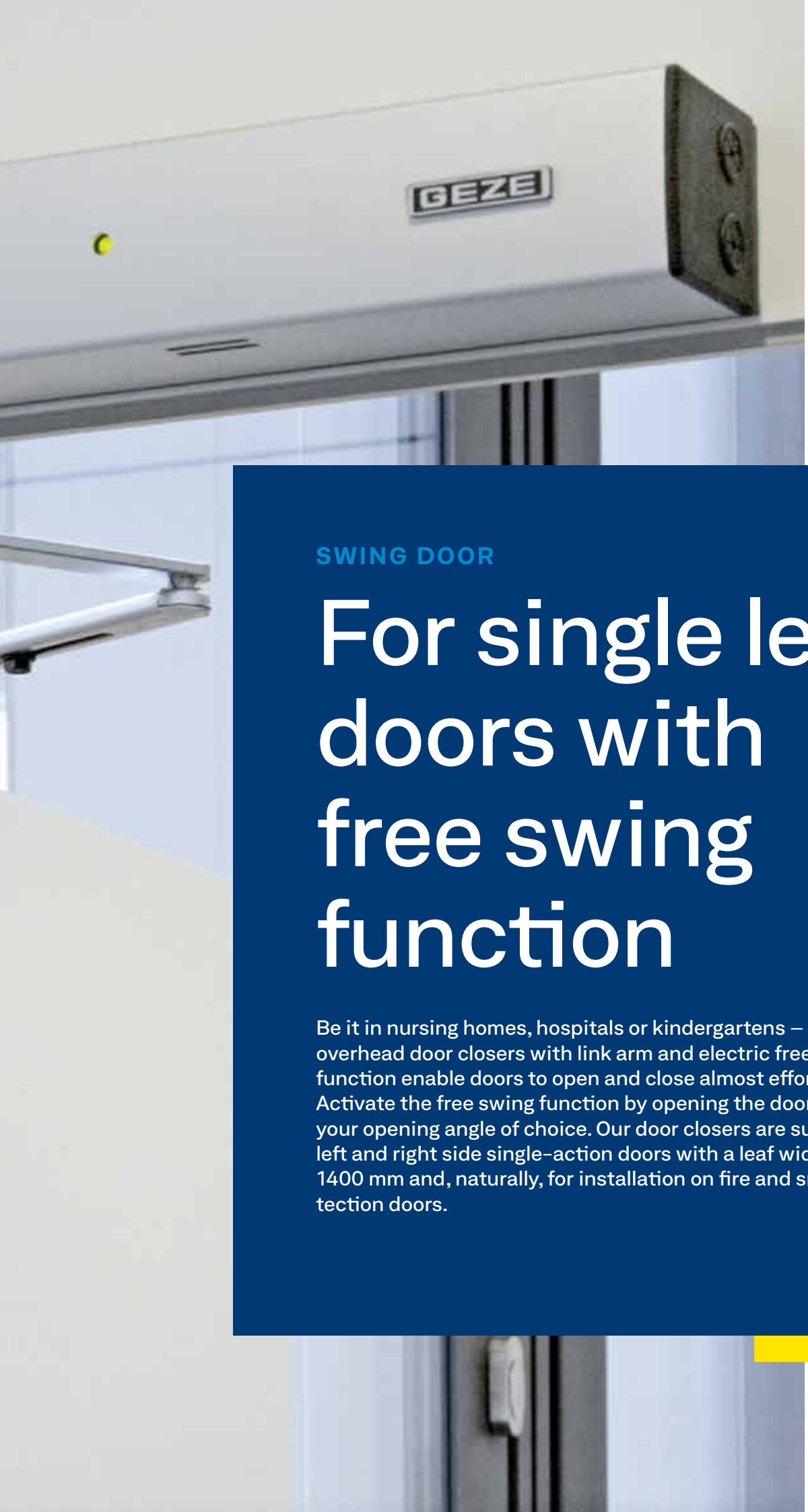

SWING DOOR

For single leaf doors with free swing function

Be it in nursing homes, hospitals or kindergartens – GEZE overhead door closers with link arm and electric free swing function enable doors to open and close almost effortlessly. Activate the free swing function by opening the door once to your opening angle of choice. Our door closers are suitable for left and right side single-action doors with a leaf width of up to 1400 mm and, naturally, for installation on fire and smoke protection doors.

TS 4000 EFS

Overhead door closer with link arm for single leaf doors up to 1400 mm leaf width with electric free swing function

AREAS OF APPLICATION

- Fire and smoke protection doors
- Right and left single-action doors
- Single-action doors up to 1400 mm leaf width
- Door leaf installation hinge side and transom installation opposite hinge side (different variants)
- Hold-open systems with integrated hold-open unit with free swing
- Barrier-free access in accordance with DIN 18040

PRODUCT FEATURES

- Closing force of EN 1-6 with variable adjustment
- Operating voltage 24 V DC
- Can be used for right and left hand doors without conversion
- Free swing function means comfortable use of the door with little effort
- Free swing function after opening the door once to approx. 90°
- Smoke switch control unit can be connected, with a signal that closes the door automatically in the event of a fire
- Mechanical latching action which accelerates the door shortly before the closed position
- Closing speed can be individually adjusted
- Visual closing force display for easy control of the setting
- All functions can be adjusted from the front (except latching action)

SPECIAL VERSION:

→ GEZE TS 4000 EFS / transom installation opposite hinge side 24 V DC

TECHNICAL DATA FOR DOOR CLOSER

	TS 4000 RFS door closer
PRODUCT FEATURES	
Closing force acc. to EN 1154	1 – 6
Leaf width recommended up to	1400 mm
Identical design for DIN left and DIN right	●
Supply voltage	24 V DC
IP rating	IP43
Product tested in accordance with	Door closer tested in accordance with EN 1154 Hold-open device tested in accordance with EN1155
Suitability for fire protection doors	●
Mounting plate with hole pattern in accordance with EN 1154 supplementary sheet	●
Length	325 mm
Overall depth	46 mm
Height	60 mm
FUNCTIONS	
Closing force adjustable	with variable adjustment
Closing speed adjustable	●
Latching action adjustable	via link arm
Back check integrated	–
Position of closing force adjustment	Front
Visual closing force display	●
Safety valve to prevent wilful damage	●
Thermo-constant valves	●
Hold-open unit integrated	Electrical
Free swing area	80°–175°

● = yes

PRODUCT SCALE DRAWING

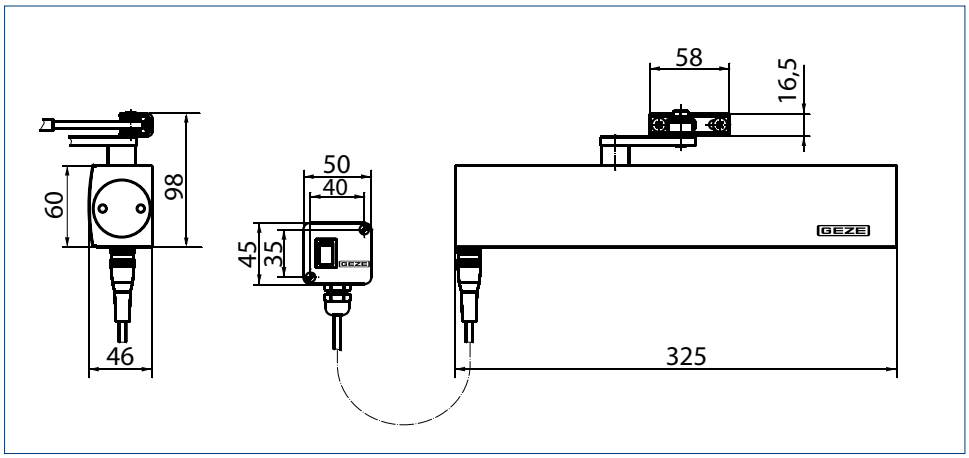

DOOR LEAF INSTALLATION/HINGE SIDE TS 4000 EFS

VIEW

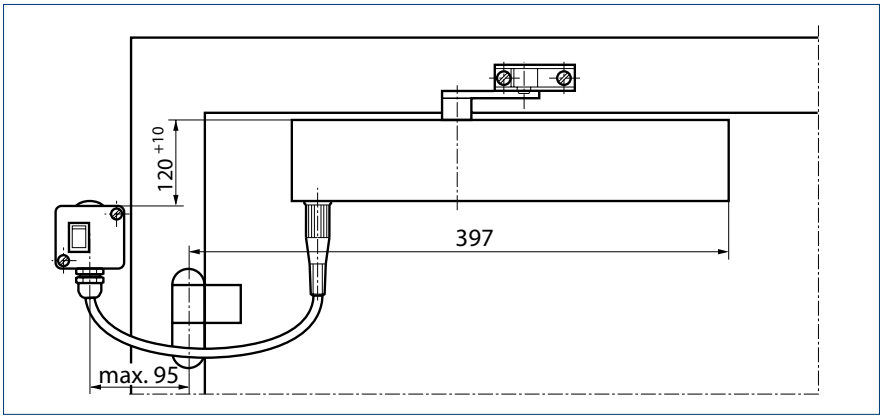

Example for the installation of GEZE TS 4000 EFS

DIRECT INSTALLATION

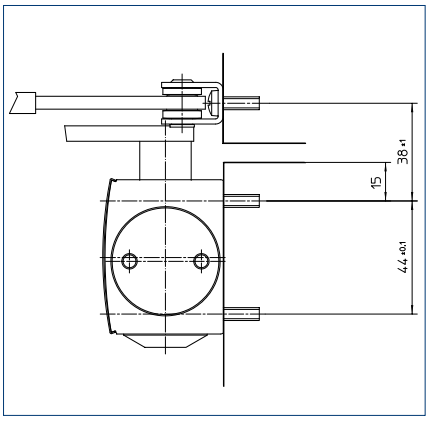

Cross-section = direct installation

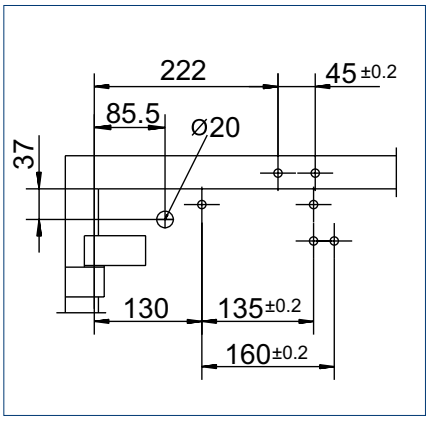

Fitting dimensions for left-hand door

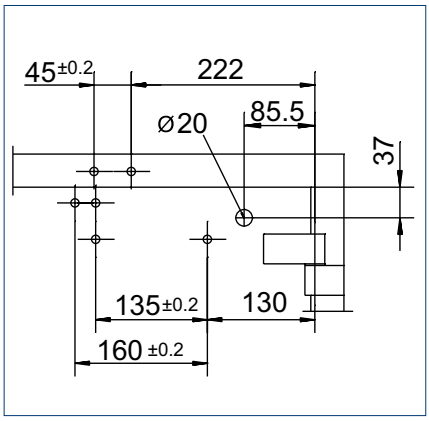

Fitting dimensions for right-hand door

INSTALLATION WITH MOUNTING PLATE

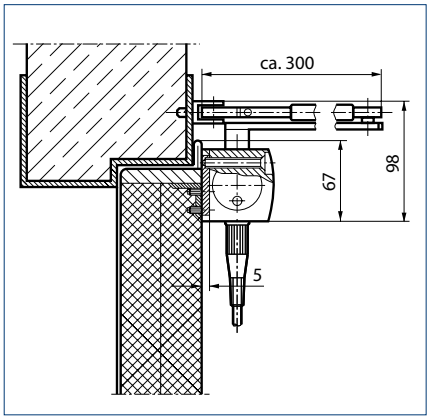

Cross-section = installation with mounting plate

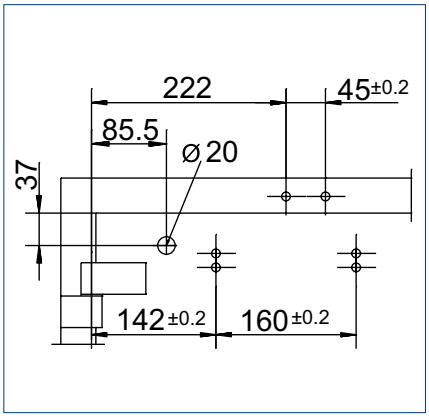

Fitting dimensions for left-hand door

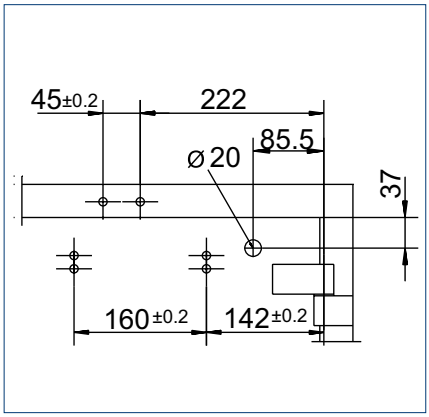

Fitting dimensions for right-hand door

TRANSOM INSTALLATION/OPPOSITE HINGE SIDE TS 4000 EFS

VIEW

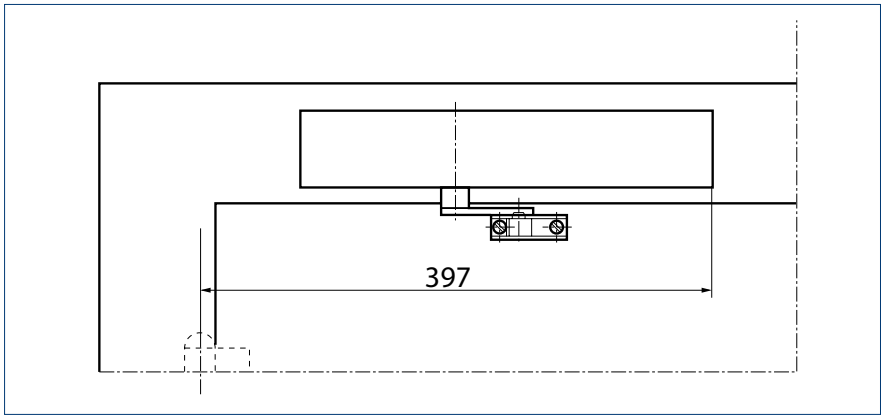

Example for the installation of GEZE TS 4000 EFS

DIRECT INSTALLATION

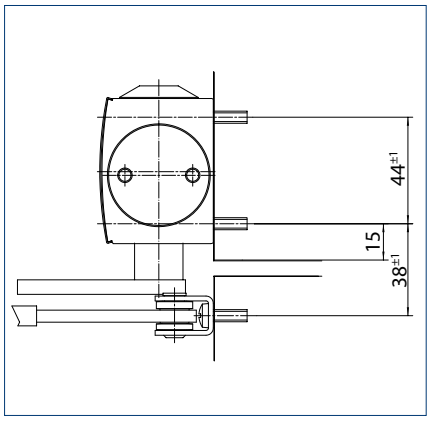

Cross-section = direct installation

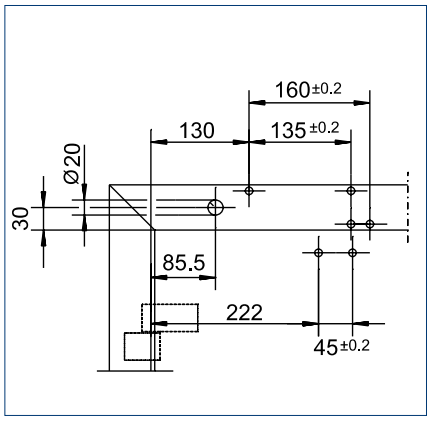

Fitting dimensions for right-hand door

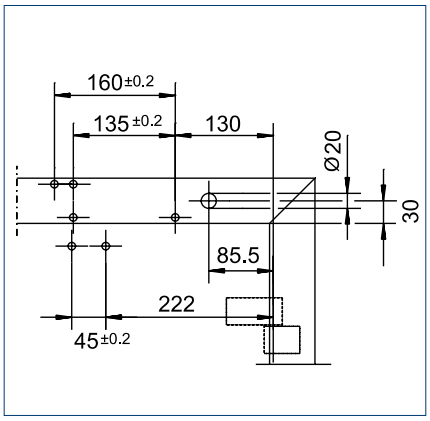

Fitting dimensions for left-hand door

INSTALLATION WITH MOUNTING PLATE

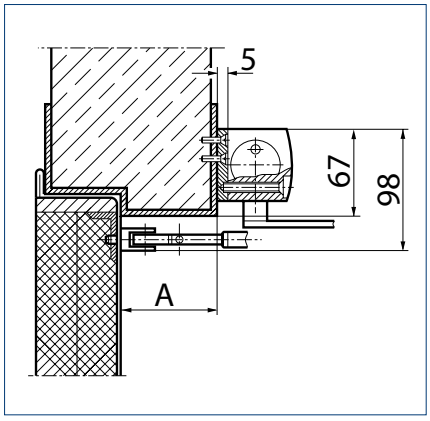

Cross-section = installation with mounting plate
A = max. 70 mm reveal depth for fire and smoke protection doors

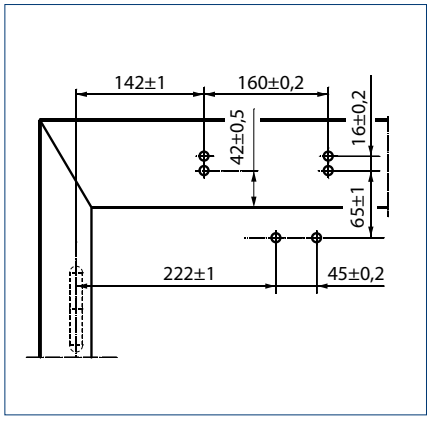

Fitting dimensions for right-hand door

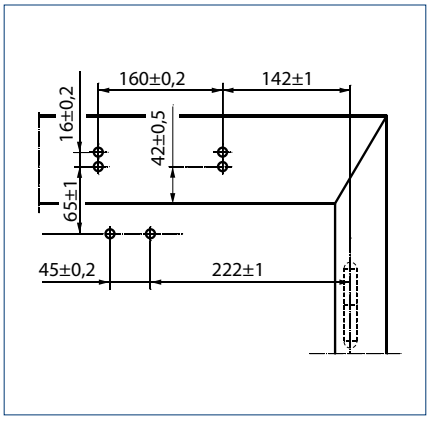

Fitting dimensions for left-hand door

ORDER INFORMATION

Designation		Version	ID no.
GEZE TS 4000 RFS door closer Closing force EN 1-6, door leaf installation hinge side, with electric hold-open device for free swing function and connector box (without free swing link arm)		silver-coloured	105211
		acc. to RAL[2]	105212
GEZE TS 4000 EFS KM BG door closer Closing force EN 1-6, transom installation opposite hinge side, with electric hold-open device for free swing function (without free swing link arm)		silver-coloured	105213
		acc. to RAL[2]	105214
Link arms TS 4000 EFS/RFS with free swing function		silver-coloured	106460
		acc. to RAL[2]	106462

INSTALLATION MATERIAL

Spindle extension for TS 4000/TS 2000 Crown gearing	10 mm	galvanised	103548
	15 mm	galvanised	103549
	20 mm	galvanised	103550
Drilling template door closer for TS 5000/4000/3000/2000			053134
Mounting plate link arm for TS 4000/2000, with slim frames		silver-coloured	057109
		acc. to RAL[2]	082506
Mounting plate link arm for TS 4000/2000, for parallel arm installation		silver-coloured	053318
		acc. to RAL[2]	027460
Mounting plate door closer for TS 5000 EFS/RFS/EHY/ 4000 E with hole pattern according to DIN EN 1154 supplementary sheet 1		silver-coloured	059107
		acc. to RAL[2]	100044

ACCESSORIES

RSZ 7 smoke switch control unit Smoke switch control unit for all GEZE hold-open devices	silver-coloured	181025
	white RAL 9016	184195
	stainless steel optic[1]	184196
	acc. to RAL[2]	185231
GC 170 Wireless KIT FA Set consisting of: 1 piece GC 171 wireless module for the wireless extension of GEZE hold-open systems		195524
GC 171 wireless module for the wireless connection of wireless components (GC 172 wireless smoke detector; GC 173 wireless thermal detector; GC 175 wireless input module) on GEZE hold-open systems	anthracite	163051
GC 172 wireless smoke detector for the wireless connection to GEZE hold-open systems, battery-operated with 8 years battery lifetime, with base, tested in accordance with EN 54-7 and EN 54-25, general construction technique permit for use with all GEZE hold-open systems	white RAL 9016	195522
GC 173 wireless thermal detector for the wireless connection to GEZE hold-open systems, battery-operated with 8 years battery lifetime, with base, tested in accordance with EN 54-7 and EN 54-25, general construction technique permit for use with all GEZE hold-open systems	white RAL 9016	195523
GEZE GC 175 wireless input module for wireless connection of manual trigger switches to the GEZE GC 171 wireless module, applicable for all GEZE hold-open systems	black	163068
GEZE GC 152 smoke detector Complete with base, 24 V DC, 20 mA, tested in accordance with EN54-7, with general official building approval for use with all GEZE hold-open systems, integrated line monitoring, conform with DIN EN 14637	white	139850
	acc. to RAL[2]	170523
GEZE GC 153 thermal detector Complete with base, 24 V DC, 20 mA, tested in accordance with EN54-5, with general official building approval for use with all GEZE hold-open systems, integrated line monitoring, conform with DIN EN 14637	white	139881
	acc. to RAL[2]	170524
GEZE AS 500 manual trigger switch Flush-mounted version for the manual release of electrically controlled hold-open devices including terminating resistor for line monitoring	alpine white/red	116266
GEZE AS 500 manual trigger switch with glass pane and 5 interchangeable labels Flush-mounted version for the manual release of electrically controlled hold-open devices including terminating resistor for line monitoring	alpine white/red	120880
Replacement glass pane for GEZE manual trigger switch 120880 and 120881		010994

1 Only for dry rooms | 2 Surcharge for RAL special colours, see General Notes

TS 4000 RFS

Overhead door closer with link arm with electric free swing function and smoke switch

AREAS OF APPLICATION

- Fire and smoke protection doors
- Right and left single-action doors
- Single-action doors up to 1400 mm leaf width
- Transom installation opposite hinge side
- Hold-open systems with integrated hold-open unit with free swing
- Barrier-free access in accordance with DIN 18040

PRODUCT FEATURES

- Closing force of EN1-6 with variable adjustment
- Operating voltage 230 V AC
- Can be used for right and left hand doors without conversion
- Free swing function means comfortable use of the door with little effort
- Free swing function after opening the door once to approx. 90°
- Integrated smoke switch control unit, with a signal that closes the door automatically in the event of a fire
- Additional smoke detectors can be fitted
- Mechanical latching action which accelerates the door shortly before the closed position
- Closing speed can be individually adjusted
- Visual closing force display for easy control of the setting
- All functions can be adjusted from the front (except latching action)

TECHNICAL DATA FOR DOOR CLOSER

	TS 4000 RFS KM BG door closer
PRODUCT FEATURES	
Closing force acc. to EN 1154	1 – 6
Leaf width recommended up to	1400 mm
Identical design for DIN left and DIN right	●
Supply voltage	230 V 50 Hz
IP rating	IP20
Product tested in accordance with	Door closer tested in accordance with EN 1154 Hold-open device tested in accordance with EN1155 General official building approval from DIBt as a hold-open system
Suitability for fire protection doors	●
Mounting plate with hole pattern in accordance with EN 1154 supplementary sheet	●
Length	547 mm
Overall depth	65 mm
Height	65 mm
FUNCTIONS	
Closing force adjustable	with variable adjustment
Closing speed adjustable	●
Latching action adjustable	via link arm
Back check integrated	-
Position of closing force adjustment	Front
Visual closing force display	●
Safety valve to prevent wilful damage	●
Thermo-constant valves	●
Hold-open unit integrated	Electrical
Integrated smoke switch	●
with visual operating state display	●
with contamination indicator	●
with adaption of the alarm threshold	●
Integrated power supply	●
Free swing area	80°-175°

● = yes

PRODUCT SCALE DRAWING

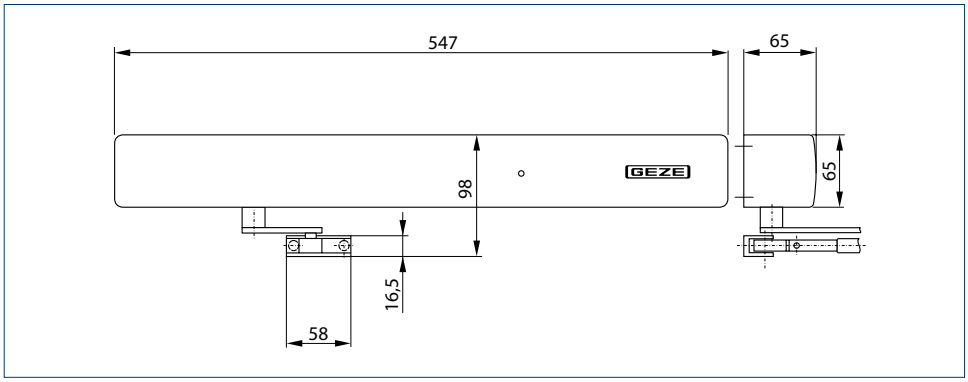

TRANSOM INSTALLATION/OPPOSITE HINGE SIDE TS 4000 RFS

DISPLAY

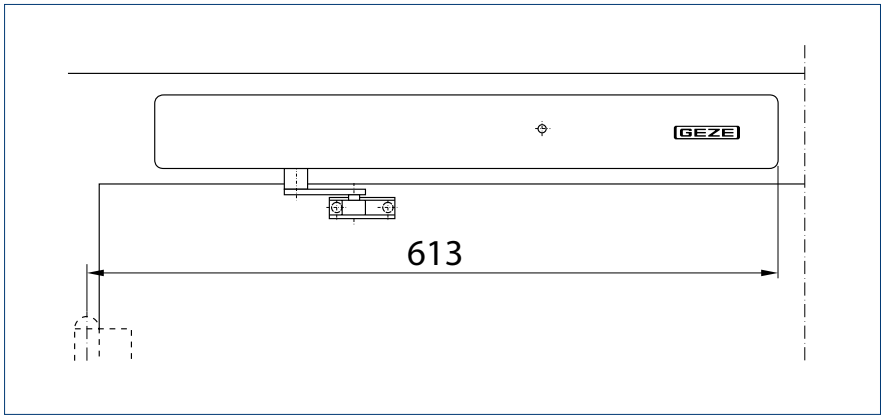

Example for the installation of GEZE TS 4000 RFS

DIRECT INSTALLATION

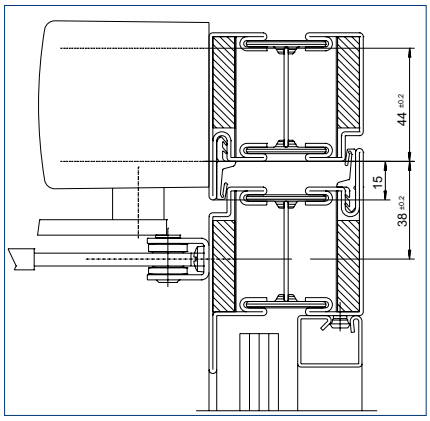

Cross-section = direct installation

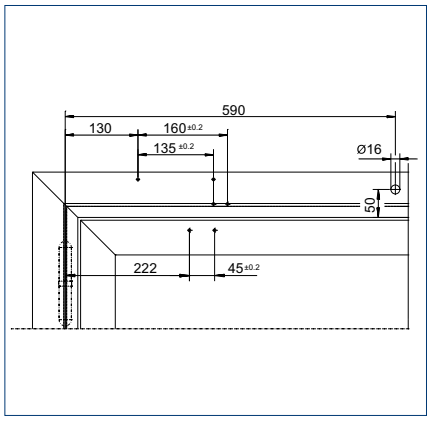

Fitting dimensions for right-hand door

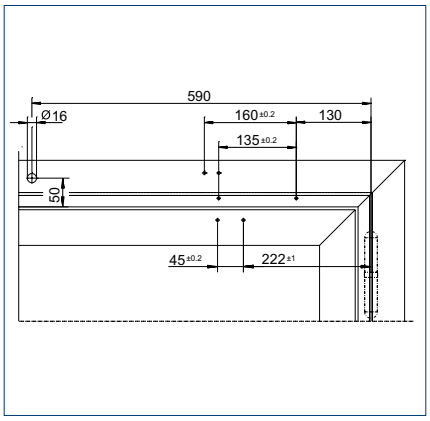

Fitting dimensions for left-hand door

INSTALLATION WITH MOUNTING PLATE

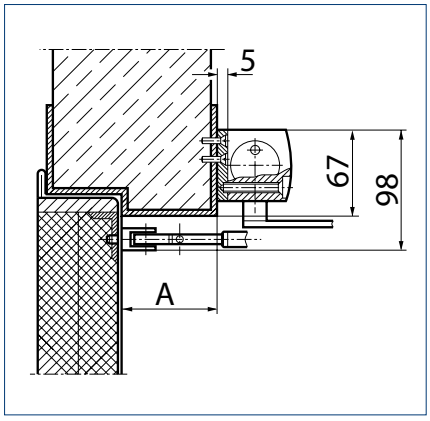

Cross-section = installation with mounting plate, A = max. 70 mm reveal depth for fire and smoke protection doors

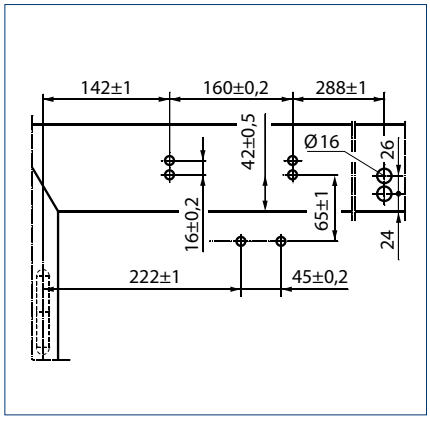

Fitting dimensions for right-hand door

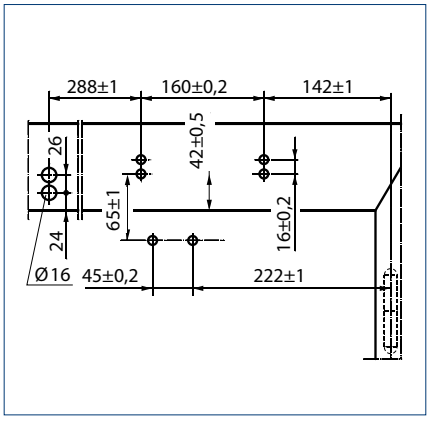

Fitting dimensions for left-hand door

ORDER INFORMATION

Designation		Version	ID no.
GEZE TS 4000 RFS KM BG door closer Closing force EN 1–6, transom installation opposite hinge side, with electric hold-open device for free swing function and integrated smoke switch control unit (without frees wing link arm)		silver-coloured	105241
		acc. to RAL[2]	105242
Link arms TS 4000 EFS/RFS with free swing function		silver-coloured	106460
		acc. to RAL[2]	106462

INSTALLATION MATERIAL

Spindle extension for TS 4000/TS 2000 Crown gearing	10 mm	galvanised	103548
	15 mm	galvanised	103549
	20 mm	galvanised	103550
Mounting plate door closer for TS 5000 RFS KM/4000 R & R-IS with hole pattern according to DIN EN 1154 supplementary sheet 1		black	058808

ACCESSORIES

GC 170 Wireless KIT FA Set consisting of: 1 piece GC 171 wireless module for the wireless extension of GEZE hold-open systems			195524
GC 171 wireless module for the wireless connection of wireless components (GC 172 wireless smoke detector; GC 173 wireless thermal detector; GC 175 wireless input module) on GEZE hold-open systems		anthracite	163051
GC 172 wireless smoke detector for the wireless connection to GEZE hold-open systems, battery-operated with 8 years battery lifetime, with base, tested in accordance with EN 54-7 and EN 54-25, general construction technique permit for use with all GEZE hold-open systems		white RAL 9016	195522
GC 173 wireless thermal detector for the wireless connection to GEZE hold-open systems, battery-operated with 8 years battery lifetime, with base, tested in accordance with EN 54-7 and EN 54-25, general construction technique permit for use with all GEZE hold-open systems		white RAL 9016	195523
GEZE GC 175 wireless input module for wireless connection of manual trigger switches to the GEZE GC 171 wireless module, applicable for all GEZE hold-open systems		black	163068
GEZE GC 152 smoke detector Complete with base, 24V DC, 20 mA, tested in accordance with EN54-7, with general official building approval for use with all GEZE hold-open systems, integrated line monitoring, conform with DIN EN 14637		white	139850
		acc. to RAL[2]	170523
GEZE GC 153 thermal detector Complete with base, 24 V DC, 20 mA, tested in accordance with EN54-5, with general official building approval for use with all GEZE hold-open systems, integrated line monitoring, conform with DIN EN 14637		white	139881
		acc. to RAL[2]	170524
GEZE AS 500 manual trigger switch Flush-mounted version for the manual release of electrically controlled hold-open devices including terminating resistor for line monitoring		alpine white/red	116266
GEZE AS 500 manual trigger switch (with glass pane and 5 interchangeable labels) Flush-mounted version for the manual release of electrically controlled hold-open devices including terminating resistor for line monitoring		alpine white/red	120880
Replacement glass pane for GEZE manual trigger switch 120880 and 120881			010994

1 Only for dry rooms | 2 Surcharge for RAL special colours, see General Notes

TS 4000 RFS, Sparkasse, Germany (Photo: N. Grünwald / GEZE GmbH)

SWING DOOR

For double leaf doors

Overhead door closer systems with link arm – the phrase might sound complicated, but the GEZE technology makes opening and closing double leaf doors particularly easier and convenient. Our integrated hydraulic closing sequence control helps in this regard: When the door closes, the active leaf must remain in the waiting position until the passive leaf is closed – and until the active leaf is released by the closing sequence control. Use the various specific setting options for our overhead door closers and make your door and gate systems safe, efficient and accessible.

TS 4000 IS

Overhead door closer system with link arm for double leaf doors with closing sequence control

AREAS OF APPLICATION

- Fire and smoke protection doors
- Double leaf single-action doors
- Single-action doors up to 2800 mm hinge clearance and 1400 mm leaf width
- Door leaf installation on hinge side and transom installation on opposite hinge side

PRODUCT FEATURES

- System consisting of two door closers TS 4000 IS and TS 4000 with link arm and release mechanism
- Closing force of EN1-6 with variable adjustment
- Can be used for right and left hand doors without conversion
- Closing sequence control holds the active leaf in the waiting position until the passive leaf is closed
- Mechanical latching action which accelerates the door shortly before the closed position
- Closing speed can be individually adjusted
- Integrated back check, slows down doors that are thrown open forcefully
- Visual closing force display for easy control of the setting
- All functions can be adjusted from the front (except latching action)

TECHNICAL DATA FOR DOOR CLOSER

	TS 4000 IS door closer	TS 4000 door closer
PRODUCT FEATURES		
Closing force acc. to EN 1154	1 – 6	
Leaf width recommended up to	1400 mm	
Identical design for DIN left and DIN right	●	●
Product tested in accordance with	Door closer tested in accordance with EN 1154 Closing sequence controller tested in accordance with EN1158	Door closer tested in accordance with EN 1154
Suitability for fire protection doors	●	●
Mounting plate with hole pattern in accordance with EN 1154 supplementary sheet	●	●
Length	287 mm	
Overall depth	46 mm	
Height	60 mm	
FUNCTIONS		
Closing force adjustable	with variable adjustment	
Closing speed adjustable	●	●
Latching action adjustable	via link arm	
Back check integrated	–	hydraulically adjustable
Position of closing force adjustment	Front	
Visual closing force display	●	●
Safety valve to prevent wilful damage	●	●
Thermo-constant valves	●	●
Closing sequence control integrated	●	–

● = yes

PRODUCT SCALE DRAWING

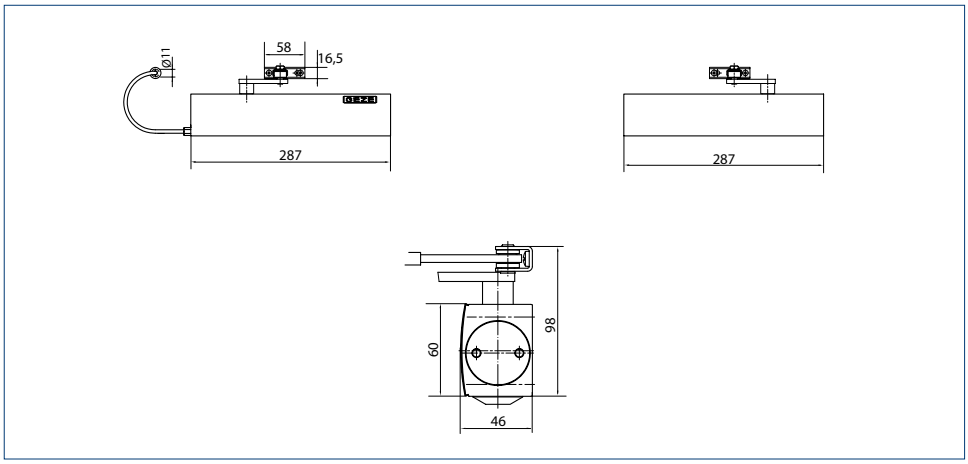

DOOR LEAF INSTALLATION/HINGE SIDE TS 4000 IS

VIEW

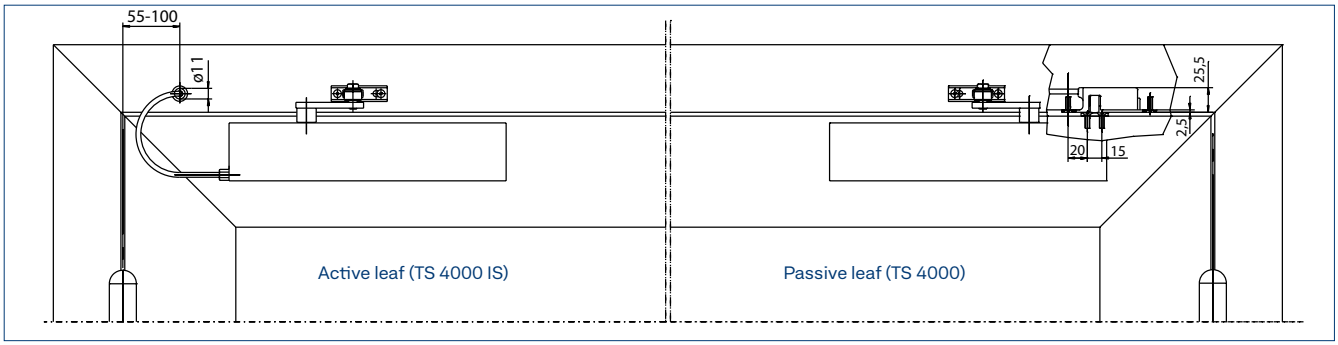

Example for the installation of GEZE TS 4000 IS

DIRECT INSTALLATION

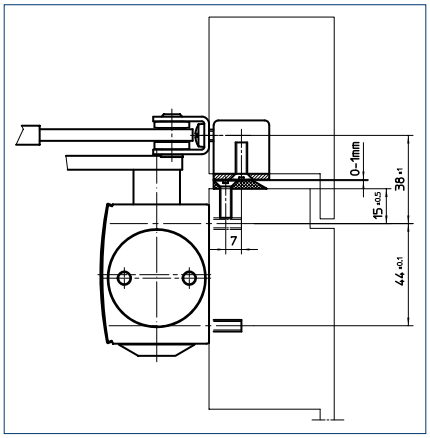

Cross-section = direct installation

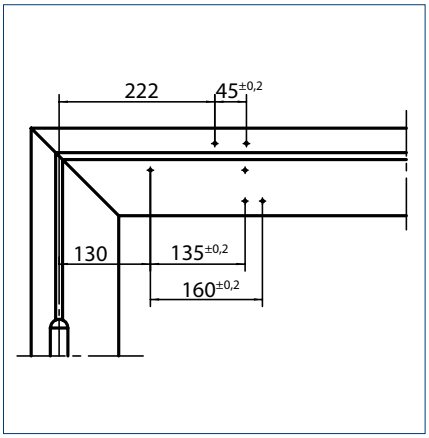

Fitting dimensions for left-hand door

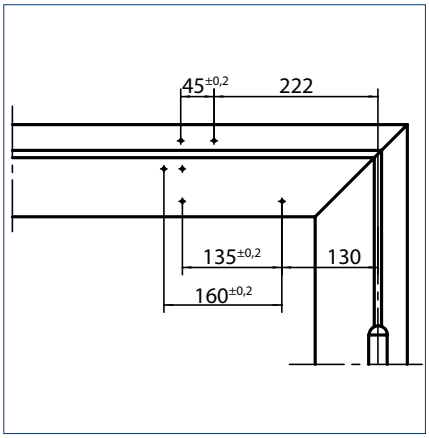

Fitting dimensions for right-hand door

INSTALLATION WITH MOUNTING PLATE

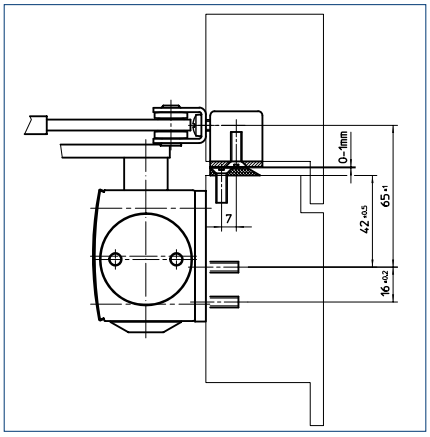

Cross-section = installation with mounting plate

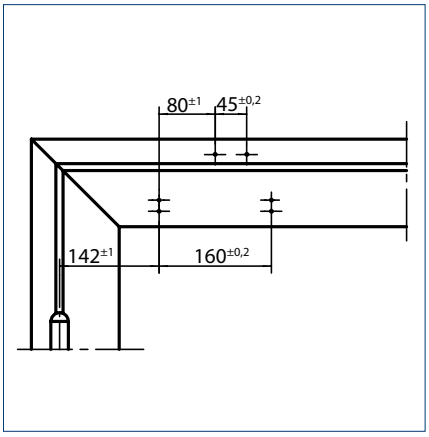

Fitting dimensions for left-hand door

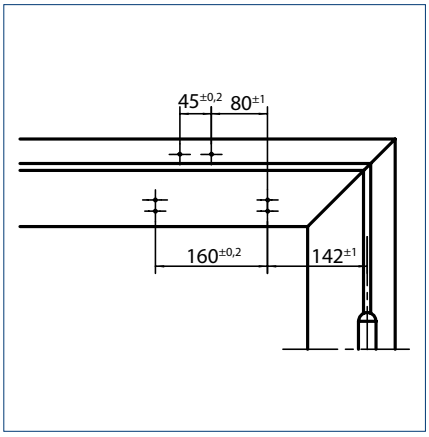

Fitting dimensions for right-hand door

TRANSOM INSTALLATION/OPPOSITE HINGE SIDE TS 4000 IS

VIEW

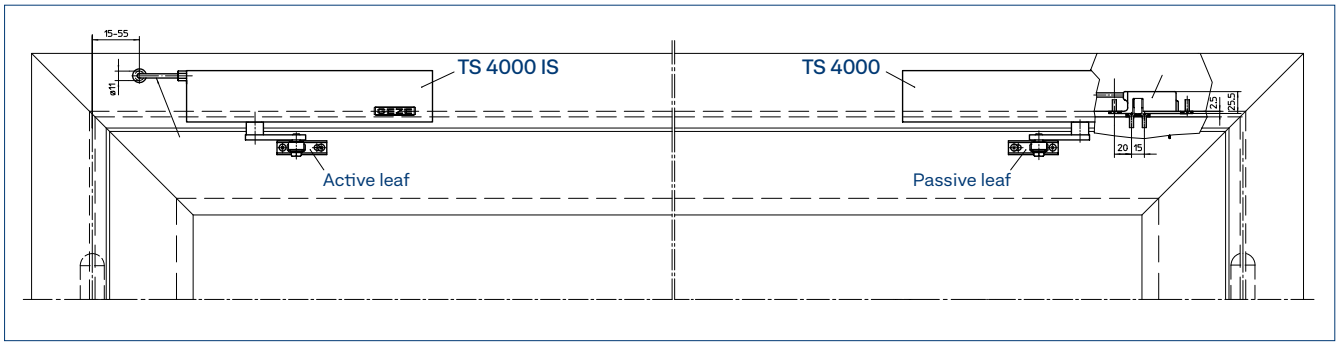

Example for the installation of GEZE TS 4000 IS

DIRECT INSTALLATION

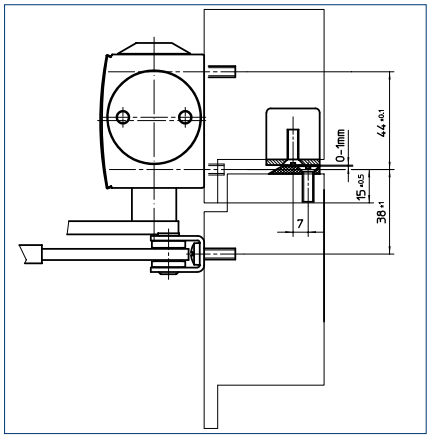

Cross-section = direct installation

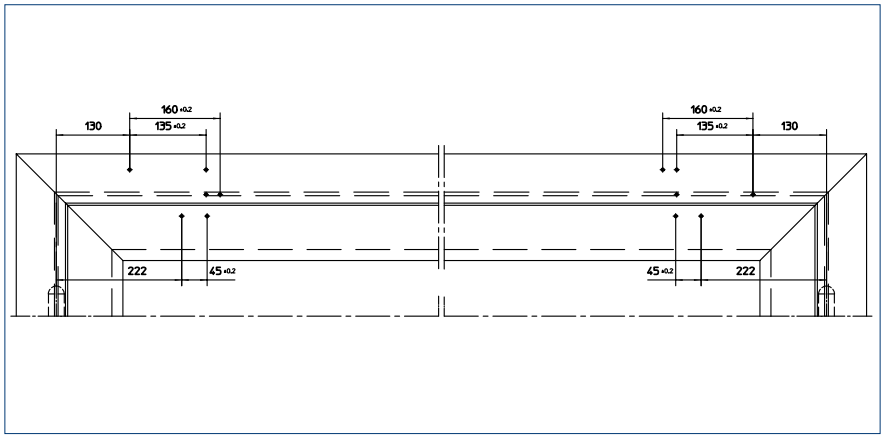

Fitting dimensions right-hand leaf = active leaf, left-hand leaf = passive leaf

INSTALLATION WITH MOUNTING PLATE

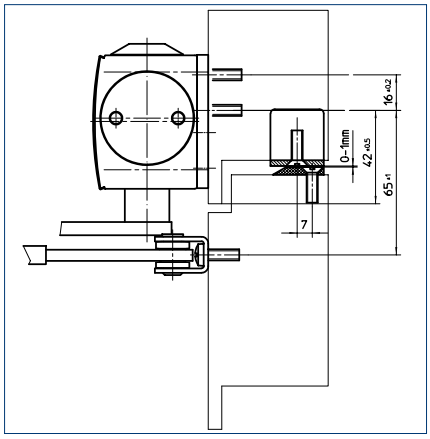

Cross-section = installation with mounting plate

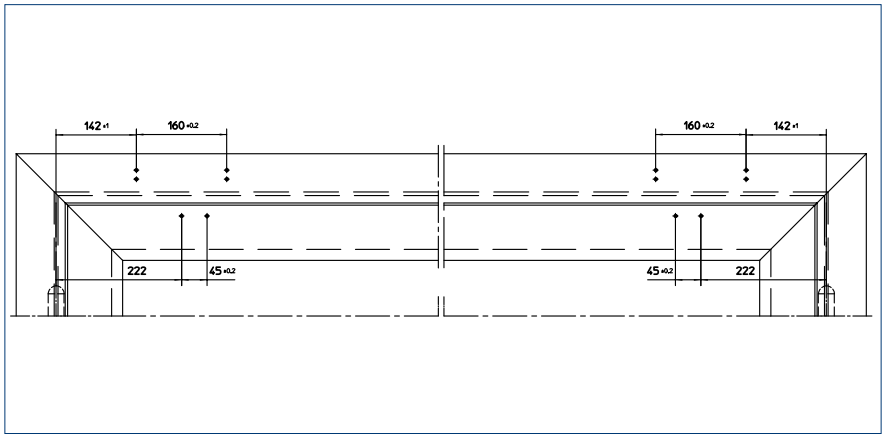

Fitting dimensions right-hand leaf = active leaf, left-hand leaf = passive leaf

RECESS FOR RELEASE MECHANISM

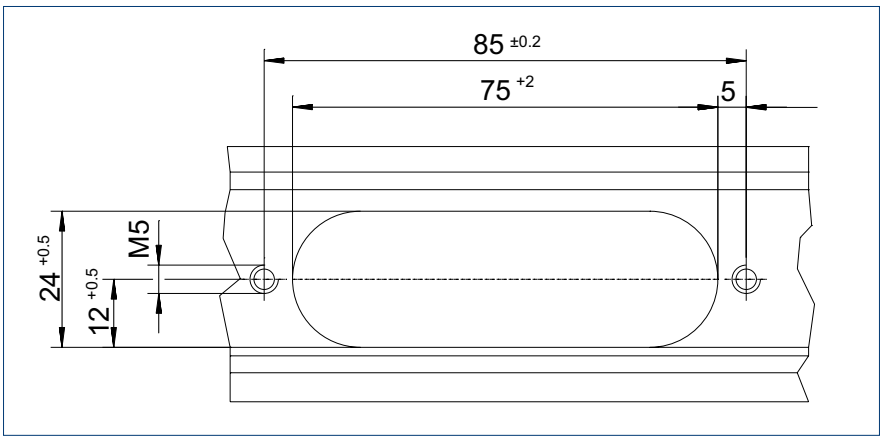

ORDER INFORMATION

Designation	Version	ID no.
GEZE TS 4000 IS door closer Closing force EN 1-6 with integrated closing sequence control (without release mechanism and link arm)	silver-coloured	102798
	white RAL 9016	102801
	acc. to RAL[2]	102802
GEZE TS 4000 door closer Closing force EN 1-6 with back check (without link arm)	silver-coloured	102789
	white RAL 9016	102791
	acc. to RAL[2]	102792
Link arms TS 4000/2000 Extended, for transom installation with reveal depth between 70-170 mm	silver-coloured	102431
	white RAL 9016	102433
	acc. to RAL[2]	102434
Link arms TS 4000/2000 Standard	silver-coloured	102421
	white RAL 9016	102423
	stainless steel optic[1]	102426
	acc. to RAL[2]	102425
Release mechanism closing sequence control for TS 4000 IS / E-IS	No. 1 hinge clearance 1200-1500 mm	058306
	No. 2 hinge clearance 1500-1800 mm	058307
	No. 3 hinge clearance 1800-2100 mm	058308
	No. 4 hinge clearance 2100-2400 mm	058309
	No. 5 hinge clearance 2400-2700 mm	058310
	No. 6 hinge clearance in excess of 2700 mm	058311

INSTALLATION MATERIAL			
Spindle extension for TS 4000/TS 2000 Crown gearing	10 mm	galvanised	103548
	15 mm	galvanised	103549
	20 mm	galvanised	103550
Drilling template door closer for TS 5000/4000/3000/2000			053134
Glass clamping shoe door closer for TS 5000/TS 4000		silver-coloured	057126
		white RAL 9016	009491
		acc. to RAL[2]	009494
Mounting plate and counterplate for all-glass door for TS 5000/TS 4000		silver-coloured	007923
		acc. to RAL[2]	007926
Mounting plate link arm for TS 4000/2000, with slim frames		silver-coloured	057109
		acc. to RAL[2]	082506
Mounting plate link arm for TS 4000/2000, for parallel arm installation		silver-coloured	053318
		acc. to RAL[2]	027460
Mounting plate door closer for TS 5000/TS 4000 with hole pattern according to DIN EN 1154 supplementary sheet 1		silver-coloured	049185
		white RAL 9016	068627
		galvanised	057956
		acc. to RAL[2]	029176
Lintel casing bracket transom installation BG for TS 5000/TS 4000		silver-coloured	049240
		acc. to RAL[2]	104451
ACCESSORIES			
GEZE CB flex carry bar for use on all 2-leaf rebated doors. Concealed length adjustment with variable adjustment up to 210 mm leaf protrusion, hinged mechanism not visible, profile can be shortened if needed, with attachment material		acc. to RAL[2]	153728
		silver-coloured	153602

1) Only for dry rooms | 2 Surcharge for RAL special colours, see General Notes

TS 4000 E-IS

Overhead door closers system with link arm for double leaf doors with closing sequence control and electric hold-open device

AREAS OF APPLICATION

- Fire and smoke protection doors
- Double leaf single-action doors
- Single-action doors up to 2800 mm hinge clearance and 1400 mm leaf width
- Door leaf installation hinge side and transom installation opposite hinge side (different variants)
- Hold-open systems with integrated hold-open unit

PRODUCT FEATURES

- System consisting of two door closers TS 4000 E-IS (active leaf) and TS 4000 E (passive leaf) and release mechanism
- Closing force of EN1-6 with variable adjustment
- Operating voltage 24 V DC
- Can be used for right and left hand doors without conversion
- Electric hold-open device on both leaves with a hold-open area of 80°-175°
- Closing sequence control holds the active leaf in the waiting position until the passive leaf is closed
- Integrated back check on the passive leaf, slows down doors that are thrown open forcefully
- Mechanical latching action which accelerates the door shortly before the closed position
- Closing speed can be individually adjusted
- Visual closing force display for easy control of the setting
- All functions can be adjusted from the front (except latching action)

TECHNICAL DATA FOR DOOR CLOSER

	TS 4000 E-IS door closer	TS 4000 E door closer
PRODUCT FEATURES		
Closing force acc. to EN 1154	1 – 6	
Leaf width recommended up to	1400 mm	
Identical design for DIN left and DIN right	●	●
Supply voltage	24 V DC	
IP rating	IP43	
Product tested in accordance with	Door closer tested in accordance with EN 1154 Hold-open device tested in accordance with EN1155 Closing sequence controller tested in accordance with EN1158	Door closer tested in accordance with EN 1154 Hold-open device tested in accordance with EN1155
Suitability for fire protection doors	●	●
Mounting plate with hole pattern in accordance with EN 1154 supplementary sheet	●	●
Length	325 mm	
Overall depth	46 mm	
Height	60 mm	
FUNCTIONS		
Closing force adjustable	with variable adjustment	
Closing speed adjustable	●	●
Latching action adjustable	via link arm	
Back check integrated	-	
Position of closing force adjustment	Front	
Visual closing force display	●	●
Safety valve to prevent wilful damage	●	●
Thermo-constant valves	●	●
Closing sequence control integrated	●	
Hold-open unit integrated	Electrical	
Hold-open unit can be overridden	●	●
Hold-open angle	80°-175°	

● = yes

PRODUCT SCALE DRAWING

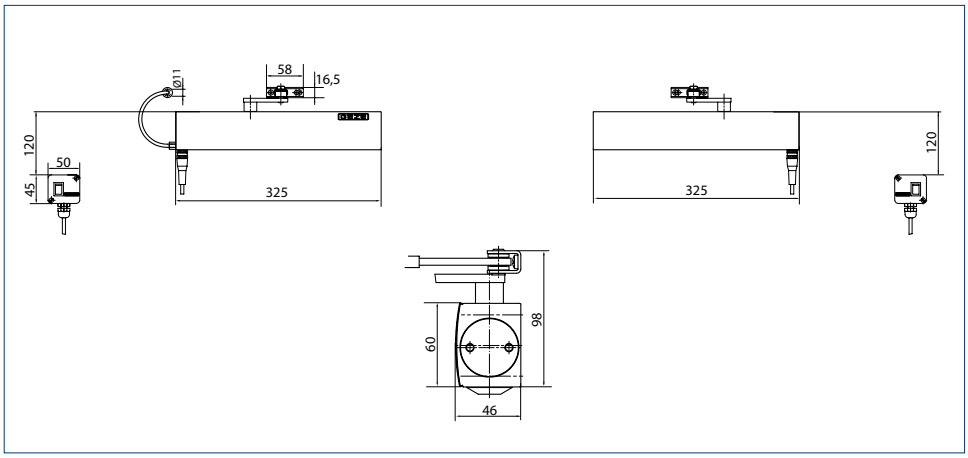

DOOR LEAF INSTALLATION/HINGE SIDE TS 4000 E-IS

VIEW

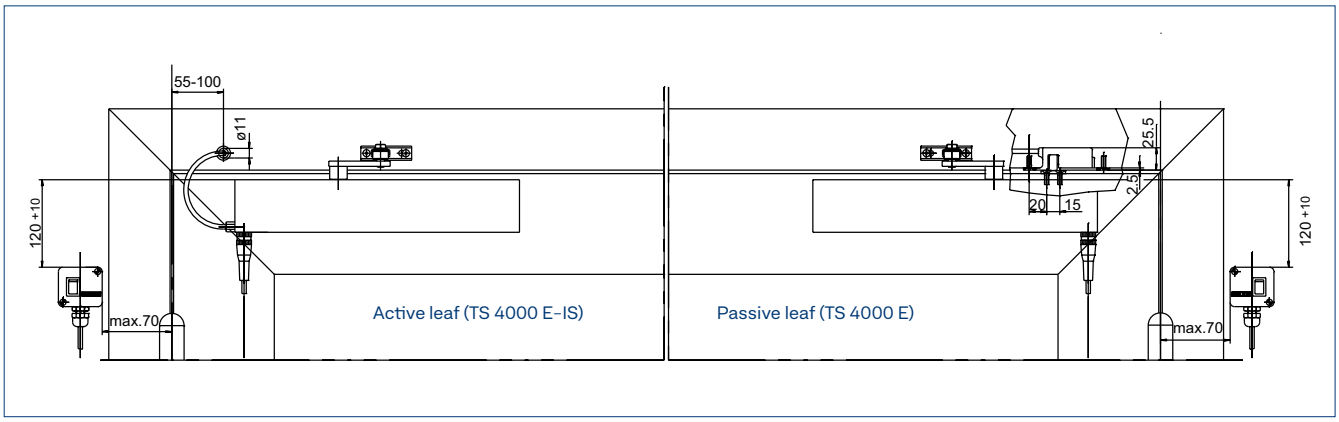

Example for the installation of GEZE TS 4000 E-IS

DIRECT INSTALLATION

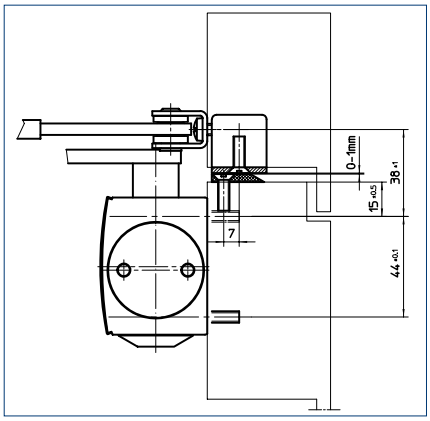

Cross-section = direct installation

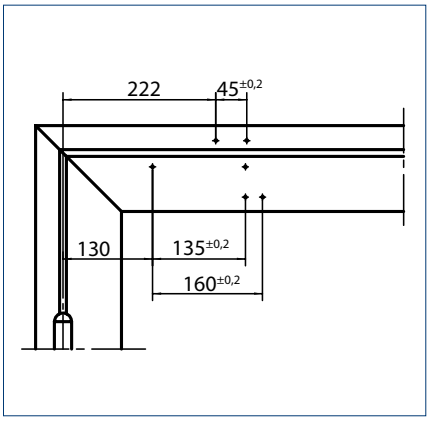

Fitting dimensions for left-hand door

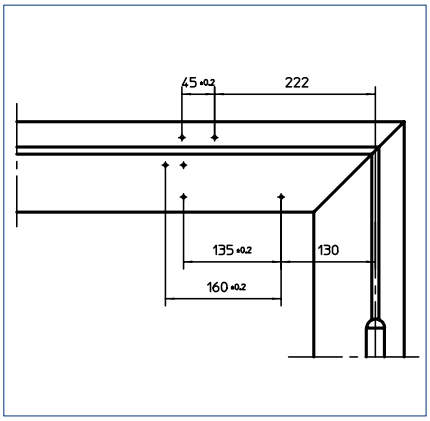

Fitting dimensions for right-hand door

INSTALLATION WITH MOUNTING PLATE

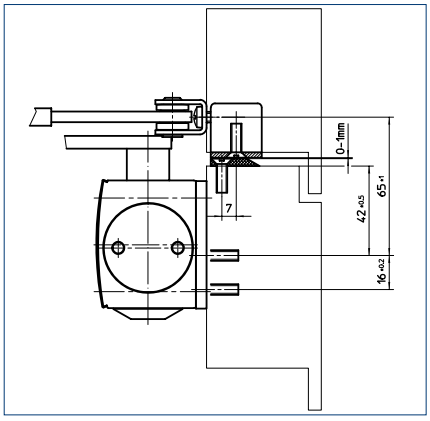

Cross-section = installation with mounting plate

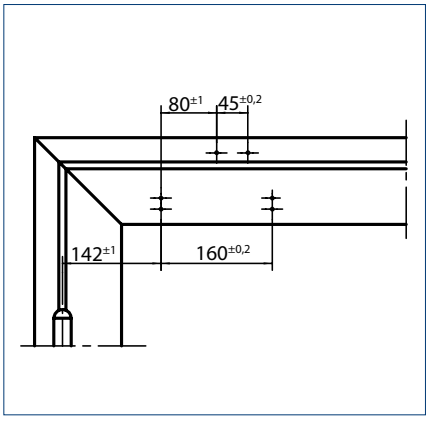

Fitting dimensions for left-hand door

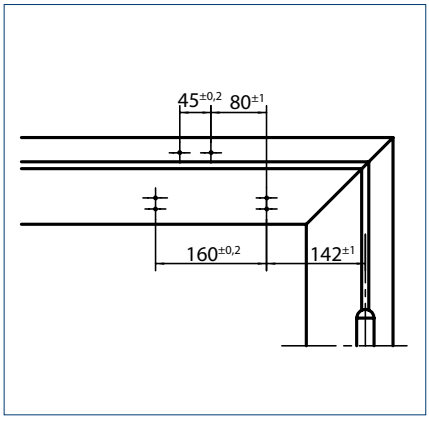

Fitting dimensions for right-hand door

TRANSOM INSTALLATION/OPPOSITE HINGE SIDE TS 4000 E-IS

VIEW

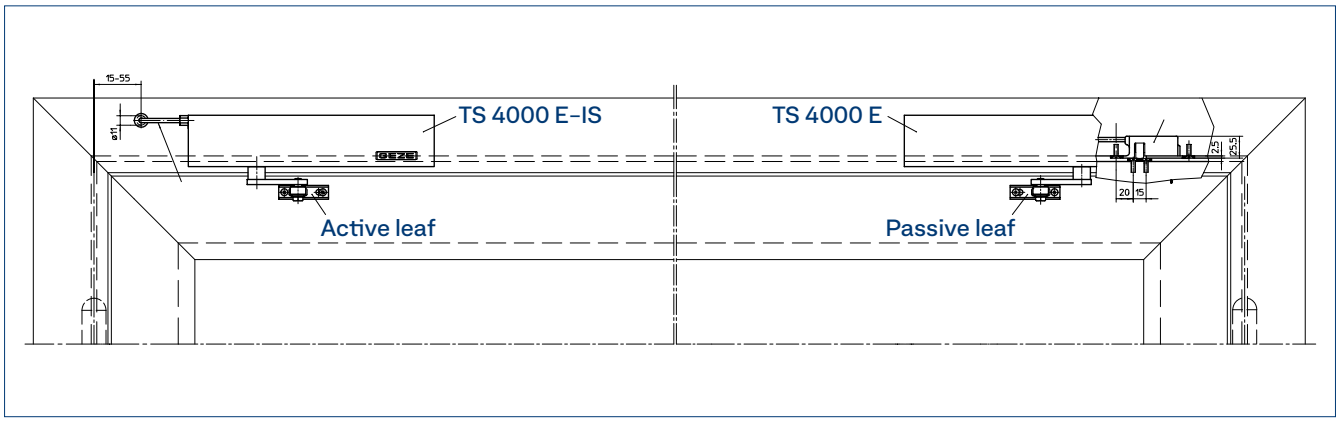

Example for the installation of GEZE TS 4000 E-IS

DIRECT INSTALLATION

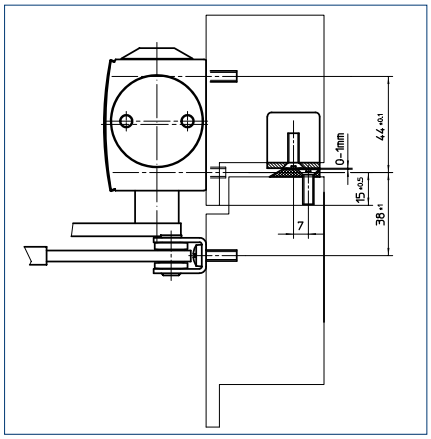

Cross-section = direct installation

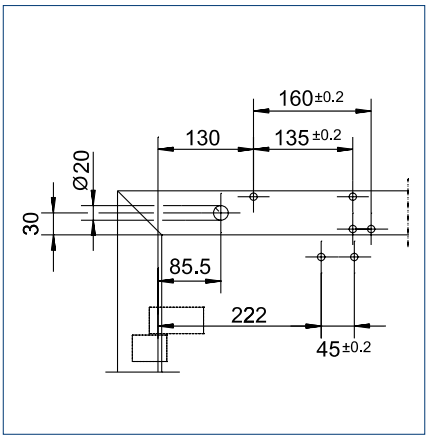

Fitting dimensions for right-hand door

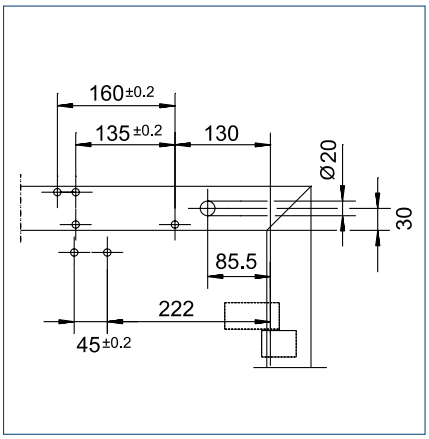

Fitting dimensions for left-hand door

INSTALLATION WITH MOUNTING PLATE

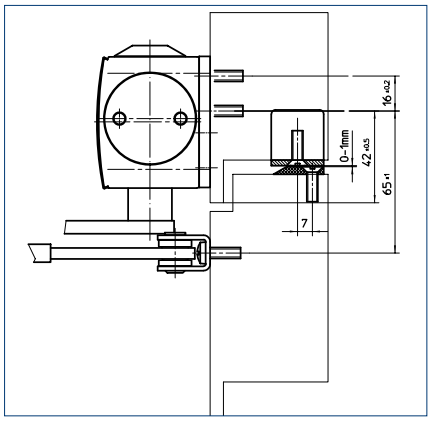

Cross-section = installation with mounting plate

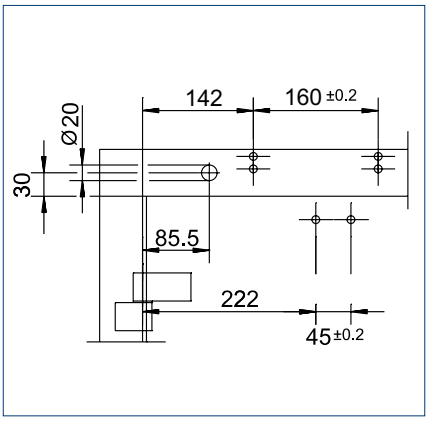

Fitting dimensions for right-hand door

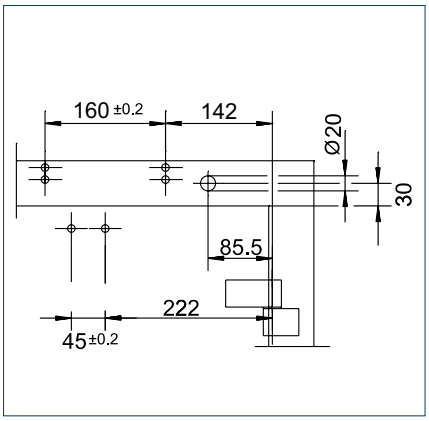

Fitting dimensions for left-hand door

ORDER INFORMATION

Designation		Version	ID no.
GEZE TS 4000 E door closer Closing force EN 1-6, door leaf installation on the hinge side, with electric hold-open device and connector box (without link arm)		silver-coloured	105211
		acc. to RAL[2]	105212
GEZE TS 4000 E KM BG door closer Closing force EN 1-6, transom installation opposite hinge side, with electric hold-open device (without link arm)		silver-coloured	105213
		acc. to RAL[2]	105214
GEZE TS 4000 E-IS door closer Closing force EN 1-6, door leaf installation on the hinge side, with electric hold-open device, connector box, integrated closing sequence control and mounting plate (without release mechanism and link arm)		silver-coloured	105237
		acc. to RAL[2]	105238
GEZE TS 4000 E-IS KM BG door closer Closing force EN 1-6, transom installation opposite hinge side, with electric hold-open device, integrated closing sequence control and mounting plate (without link arm and connector boxes)		silver-coloured	105239
		acc. to RAL[2]	105240
Link arms TS 4000/2000 Extended, for transom installation with reveal depth between 70-170 mm		silver-coloured	102431
		white RAL 9016	102433
		acc. to RAL[2]	102434
Link arms TS 4000/2000 Standard		silver-coloured	102421
		white RAL 9016	102423
		stainless steel optic[1]	102426
		acc. to RAL[2]	102425
Release mechanism closing sequence control for TS 4000 IS / E-IS/ R-IS	No.1 Hinge clearance 1200-1500 mm		058306
	No.2 Hinge clearance 1500-1800 mm		058307
	No.3 Hinge clearance 1800-2100 mm		058308
	No.4 Hinge clearance 2100-2400 mm		058309
	No.5 Hinge clearance 2400-2700 mm		058310
	No.6 Hinge clearance in excess of 2700 mm		058311
INSTALLATION MATERIAL			
Spindle extension for TS 4000/TS 2000 Crown gearing	10 mm	galvanised	103548
	15 mm	galvanised	103549
	20 mm	galvanised	103550
Drilling template door closer for TS 5000/4000/3000/2000			053134
Mounting plate link arm for TS 4000/2000, with slim frames		silver-coloured	057109
		acc. to RAL[2]	082506
Mounting plate link arm for TS 4000/2000, for parallel arm installation		silver-coloured	053318
		acc. to RAL[2]	027460
Mounting plate door closer for TS 5000 EFS/RFS/EHY/ 4000 E with hole pattern according to DIN EN 1154 supplementary sheet 1		silver-coloured	059107
		acc. to RAL[2]	100044

1 Only for dry rooms | 2 Surcharge for RAL special colours, see General Notes

Designation	Version	ID no.
ACCESSORIES		
RSZ 7 smoke switch control unit Smoke switch control unit for all GEZE hold-open devices	silver-coloured	181025
	white RAL 9016	184195
	stainless steel optic[1]	184196
	acc. to RAL[2]	185231
GEZE FA GC 170 Wireless KIT Set consisting of: 1 piece GC 171 wireless module for the wireless extension of GEZE hold-open systems		195524
GEZE GC 171 wireless module for the wireless connection of wireless components (GC 172 wireless smoke detector; GC 173 wireless thermal detector; GC 175 wireless input module) on GEZE hold-open systems	anthracite	163051
GEZE GC 172 wireless smoke detector for the wireless connection to GEZE hold-open systems, battery-operated with 8 years battery lifetime, with base, tested in accordance with EN 54-7 and EN 54-25, general construction technique permit for use with all GEZE hold-open systems	white RAL 9016	195522
GEZE GC 173 wireless thermal detector for the wireless connection to GEZE hold-open systems, battery-operated with 8 years battery lifetime, with base, tested in accordance with EN 54-7 and EN 54-25, general construction technique permit for use with all GEZE hold-open systems	white RAL 9016	159657
GEZE GC 175 wireless input module for wireless connection of manual trigger switches to the GEZE GC 171 wireless module, applicable for all GEZE hold-open systems	black	163068
GEZE GC 152 smoke detector Complete with base, 24 V DC, 20 mA, tested in accordance with EN54-7, with general official building approval for use with all GEZE hold-open systems, integrated line monitoring, conform with DIN EN 14637	white	139850
	acc. to RAL[2]	170523
GEZE GC 153 thermal detector Complete with base, 24 V DC, 20 mA, tested in accordance with EN54-5, with general official building approval for use with all GEZE hold-open systems, integrated line monitoring, conform with DIN EN 14637	white	139881
	acc. to RAL[2]	170524
GEZE AS 500 manual trigger switch Flush-mounted version for the manual release of electrically controlled hold-open devices including terminating resistor for line monitoring	alpine white/red	116266
GEZE AS 500 manual trigger switch with glass pane and 5 interchangeable labels Flush-mounted version for the manual release of electrically controlled hold-open devices including terminating resistor for line monitoring	alpine white/red	120880
Replacement glass pane for GEZE manual trigger switch 120880 and 120881		010994
GEZE CB flex carry bar for use on all 2-leaf rebated doors. Concealed length adjustment with variable adjustment up to 210 mm leaf protrusion, hinged mechanism not visible, profile can be shortened if needed, with attachment material	acc. to RAL[2]	153728
	silver-coloured	153602

1 Only for dry rooms | 2 Surcharge for RAL special colours, see General Notes

TS 4000 R-IS

Overhead door closer system with link arm for double leaf doors with closing sequence control, electric hold-open device and smoke switch

AREAS OF APPLICATION

- Fire and smoke protection doors
- Double leaf single-action doors
- Single-action doors up to 2800 mm hinge clearance and 1400 mm leaf width
- Transom installation opposite hinge side
- Hold-open systems with integrated hold-open unit

PRODUCT FEATURES

- System consisting of two door closers TS 4000 R-IS with release mechanism
- Closing force of EN1-6 with variable adjustment
- Operating voltage 230 V AC
- Can be used for right and left hand doors without conversion
- Integrated smoke switch control unit, with a signal that closes the door automatically in the event of a fire
- Smoke switch with contamination indicator and adaption of the alarm threshold
- Additional smoke detectors can be fitted
- Electric hold-open device on both leaves with a hold-open area of 80°-175°
- Closing sequence control holds the active leaf in the waiting position until the passive leaf is closed
- Integrated back check on the passive leaf, slows down doors that are thrown open forcefully
- Mechanical latching action which accelerates the door shortly before the closed position
- Closing speed can be individually adjusted
- Visual closing force display for easy control of the setting
- All functions can be adjusted from the front (except latching action)

TECHNICAL DATA FOR DOOR CLOSER

	TS 4000 R-IS KM BG door closer	TS 4000 R-IS KM BG second unit door closer
PRODUCT FEATURES		
Closing force acc. to EN 1154	1 – 6	
Leaf width recommended up to	1400 mm	
Identical design for DIN left and DIN right	●	●
Supply voltage	230 V 50 Hz	24 V
IP rating	IP20	
Product tested in accordance with	Door closer tested in accordance with EN 1154 Hold-open device tested in accordance with EN1155 Closing sequence controller tested in accordance with EN1158 General official building approval from DIBt as a hold-open system	Door closer tested in accordance with EN 1154 Hold-open device tested in accordance with EN1155
Suitability for fire protection doors	●	●
Mounting plate with hole pattern in accordance with EN 1154 supplementary sheet	●	●
Length	547 mm	
Overall depth	65 mm	
Height	65 mm	
FUNCTIONS		
Closing force adjustable	with variable adjustment	
Closing speed adjustable	●	●
Latching action adjustable	via link arm	
Back check integrated	–	
Position of closing force adjustment	Front	
Visual closing force display	●	●
Safety valve to prevent wilful damage	●	●
Thermo-constant valves	●	●
Closing sequence control integrated	●	
Hold-open unit integrated	Electrical	
Hold-open angle	80°-175°	
Hold-open unit can be overridden	●	●
Integrated smoke switch	●	○
with visual operating state display	●	○
with contamination indicator	●	○
with adaption of the alarm threshold	●	○
integrated power supply	●	○

● = yes

PRODUCT SCALE DRAWING

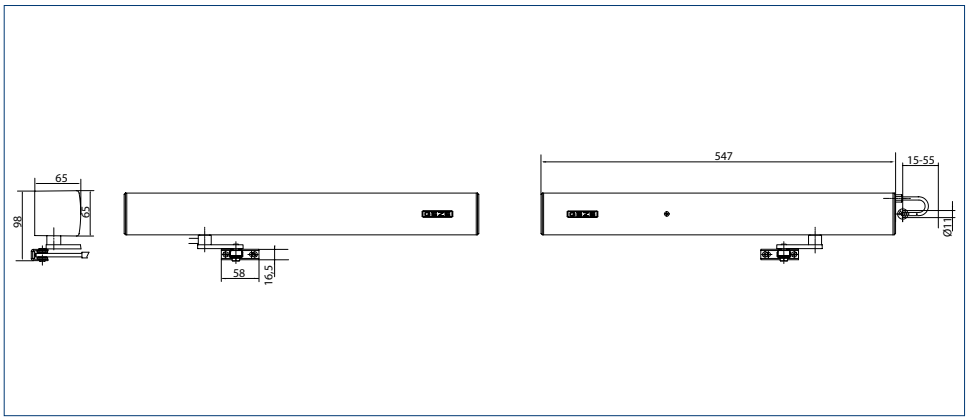

TRANSOM INSTALLATION/OPPOSITE HINGE SIDE TS 4000 R-IS

VIEW

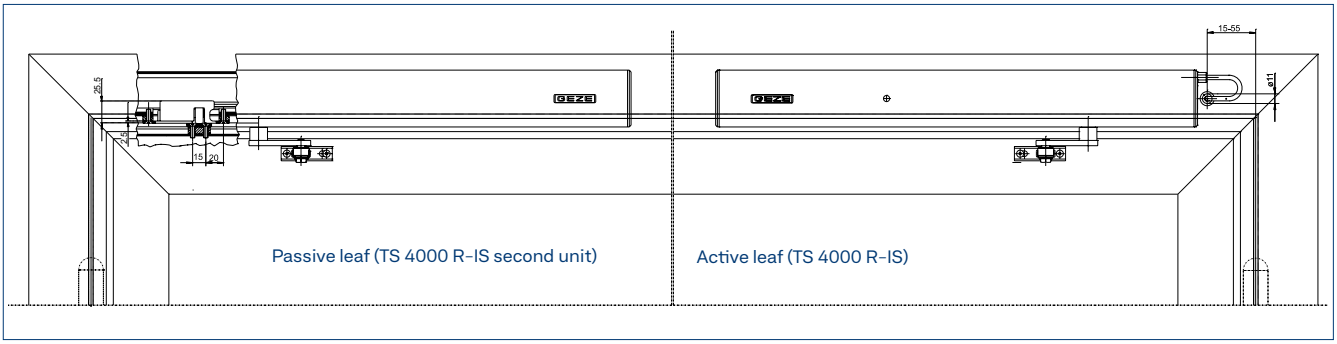

Example for the installation of GEZE TS 4000 E-IS

DIRECT INSTALLATION

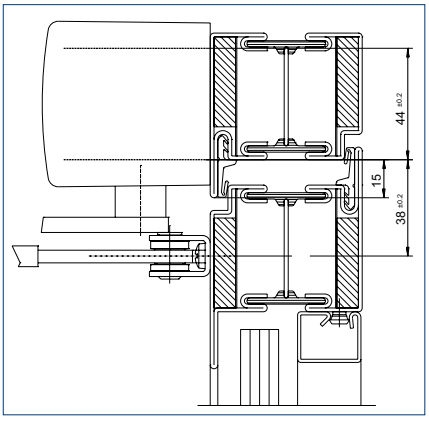

Cross-section = direct installation

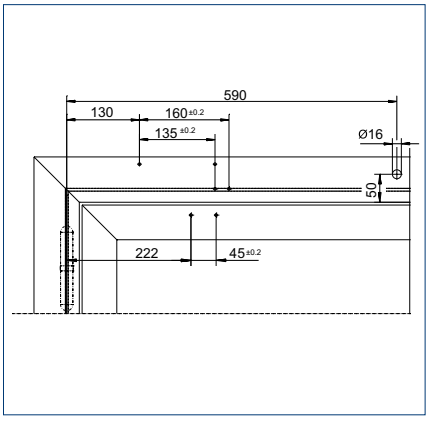

Fitting dimensions for right-hand door

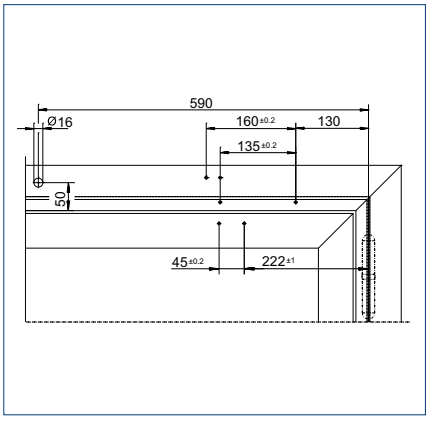

Fitting dimensions for left-hand door

INSTALLATION WITH MOUNTING PLATE

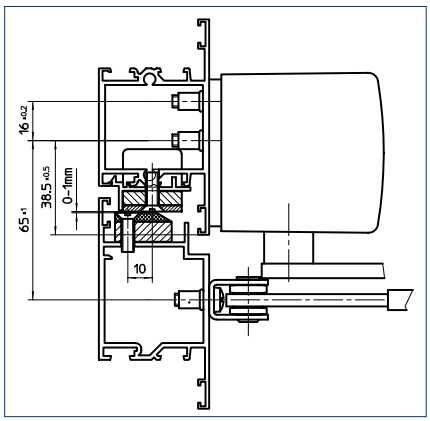

Cross-section = installation with mounting plate

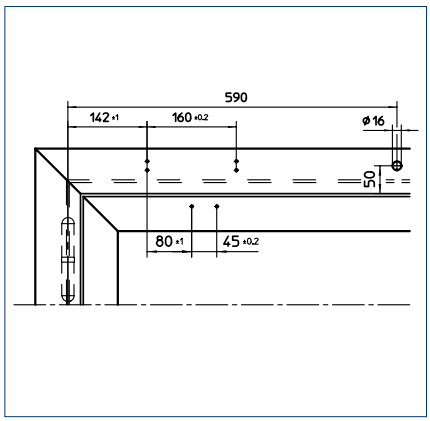

Fitting dimensions for right-hand door

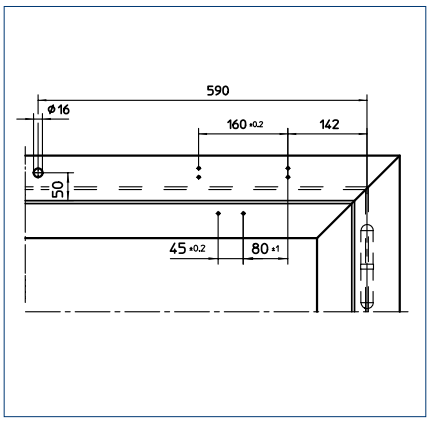

Fitting dimensions for left-hand door

RECESS FOR RELEASE MECHANISM

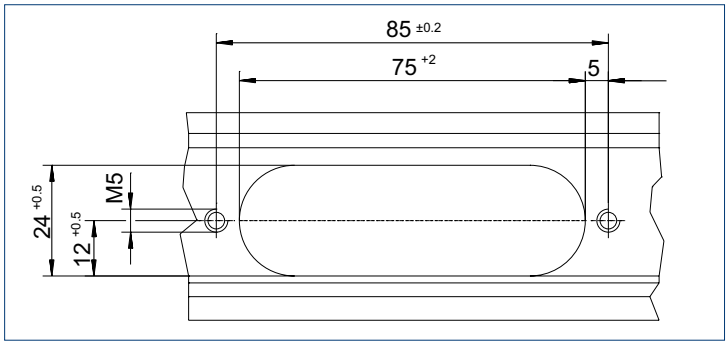

ORDER INFORMATION

Designation	Version	ID no.
GEZE TS 4000 R-IS KM BG door closer Closing force EN 1-6, transom installation opposite hinge side, with integrated closing sequence control, electric hold-open device and smoke switch control unit (without link arm and release mechanism)	silver-coloured	105244
	acc. to RAL[2]	105245
GEZE TS 4000 R-IS KM BG second unit door closer Closing force EN 1-6, transom installation opposite hinge side, with electric hold-open device (without smoke switch control unit and link arm)	silver-coloured	105246
	acc. to RAL[2]	105247
Link arms TS 4000/2000 Extended, for transom installation with reveal depth between 70-170 mm	silver-coloured	102431
	white RAL 9016	102433
	acc. to RAL[2]	102434
Link arms TS 4000/2000 Standard	silver-coloured	102421
	white RAL 9016	102423
	stainless steel optic[1]	102426
	acc. to RAL[2]	102425
Release mechanism closing sequence control for TS 4000 IS/ E-IS/ R-IS	No.1 Hinge clearance 1200-1500 mm	058306
	No.2 Hinge clearance 1500-1800 mm	058307
	No.3 Hinge clearance 1800-2100 mm	058308
	No.4 Hinge clearance 2100-2400 mm	058309
	No.5 Hinge clearance 2400-2700 mm	058310
	No.6 Hinge clearance in excess of 2700 mm	058311
INSTALLATION MATERIAL		
Mounting plate door closer for TS 5000 RFS KM/4000 R & R-IS with hole pattern according to DIN EN 1154 supplementary sheet 1	black	058808
ACCESSORIES		
GEZE FA GC 170 Wireless KIT Set consisting of: 1 piece GC 171 wireless module for the wireless extension of GEZE hold-open systems		195524
GEZE GC 171 wireless module for the wireless connection of wireless components (GC 172 wireless smoke detector; GC 173 wireless thermal detector; GC 175 wireless input module) on GEZE hold-open systems	anthracite	163051
GEZE GC 172 wireless smoke detector for the wireless connection to GEZE hold-open systems, battery-operated with 8 years battery lifetime, with base, tested in accordance with EN 54-7 and EN 54-25, general construction technique permit for use with all GEZE hold-open systems	white RAL 9016	195522
GEZE GC 173 wireless thermal detector for the wireless connection to GEZE hold-open systems, battery-operated with 8 years battery lifetime, with base, tested in accordance with EN 54-7 and EN 54-25, general construction technique permit for use with all GEZE hold-open systems	white RAL 9016	195523
GEZE GC 175 wireless input module for wireless connection of manual trigger switches to the GEZE GC 171 wireless module, applicable for all GEZE hold-open systems	black	163068
GEZE GC 152 smoke detector Complete with base, 24 V DC, 20 mA, tested in accordance with EN54-7, with general official building approval for use with all GEZE hold-open systems, integrated line monitoring, conform with DIN EN 14637	white	139850
	acc. to RAL[2]	170523
GEZE GC 153 thermal detector Complete with base, 24 V DC, 20 mA, tested in accordance with EN54-5, with general official building approval for use with all GEZE hold-open systems, integrated line monitoring, conform with DIN EN 14637	white	139881
	acc. to RAL[2]	170524
GEZE AS 500 manual trigger switch Flush-mounted version for the manual release of electrically controlled hold-open devices including terminating resistor for line monitoring	alpine white/red	116266
GEZE AS 500 manual trigger switch (with glass pane and 5 interchangeable labels) Flush-mounted version for the manual release of electrically controlled hold-open devices including terminating resistor for line monitoring	alpine white/red	120880
Replacement glass pane for GEZE manual trigger switch 120880 and 120881		010994
GEZE CB flex carry bar for use on all 2-leaf rebated doors. Concealed length adjustment with variable adjustment up to 210 mm leaf protrusion, hinged mechanism not visible, profile can be shortened if needed, with attachment material	acc. to RAL[2]	153728
	silver-coloured	153602

1 Only for dry rooms | 2 Surcharge for RAL special colours, see General Notes

TS 4000, Mövenpick Airport (photo: N. Grünwald / GEZE GmbH)

GEZE

SWING DOOR

Accessories

Providing the necessary safety in the event of danger – this is a job for hold-open devices in many cases. We can offer you an extensive range of accessories for this, such as a GEZE smoke switch control unit. Manual or wireless – use the right solution for you from our diverse range. We are more than happy to answer any questions you may have about your safe door.

RSZ 7
smoke switch control unit

VIDEO

Extendable smoke switch control unit for all GEZE hold-open devices

AREAS OF APPLICATION

- Approved for all GEZE hold-open devices for the early detection of fire and smoke
- Difficult lintel situations, for example with too little space above the smoke chamber
- Installation above the active leaf on the vertical wall
- Installation possible with surface-mounted line-feed

PRODUCT FEATURES

- Telescopic function for bridging overhangs of up to 30 mm
- Connection to 230 V power supply and 24 V DC supply of the hold-open device
- Power supply of the hold-open system is interrupted in the case of an alarm and the doors close
- Integrated smoke switch with automatic adaptation of the alarm threshold
- Compensates for light contamination of the smoke chamber and thus increases the service life
- Visual display of the current control panel status
- Additional smoke switches can be connected
- Surface-mounted line-feed possible

PRODUCT SCALE DRAWING

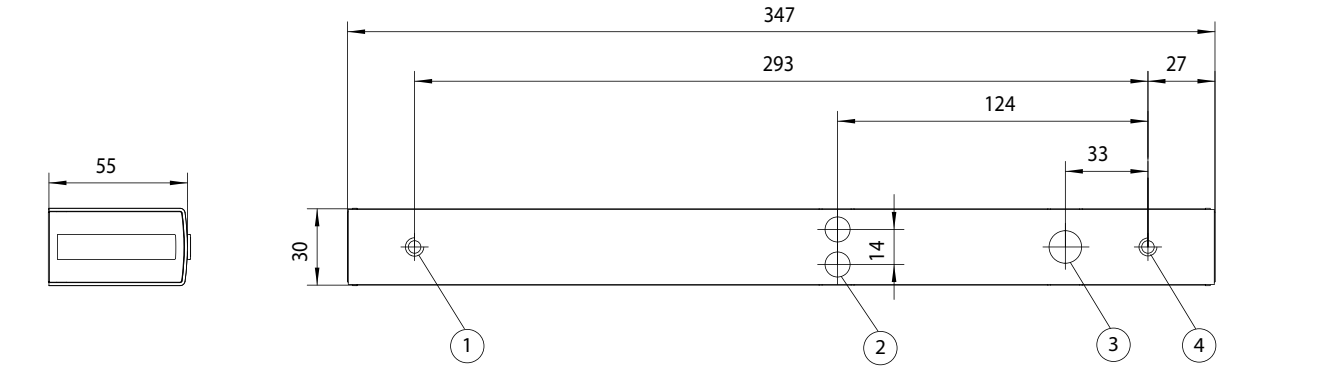

1 = threaded hole M5 | 2 = opening for additional connections | 3 = power supply (230 V) | 4 = threaded hole M5

ORDER INFORMATION

Designation	Version	ID no.
RSZ 7 smoke switch control unit Smoke switch control unit for all GEZE hold-open devices	silver-coloured	181025
	white RAL 9016	184195
	stainless steel optic[1]	184196
	acc. to RAL[2]	185231
ACCESSORIES		
GEZE FA GC 170 Wireless KIT Set consisting of: 1 piece GC 171 wireless module for the wireless extension of GEZE hold-open systems		195524
GEZE GC 171 wireless module for the wireless connection of wireless components (GC 172 wireless smoke detector; GC 173 wireless thermal detector; GC 175 wireless input module) on GEZE hold-open systems	anthracite	163051
GEZE GC 172 wireless smoke detector for the wireless connection to GEZE hold-open systems, battery-operated with 8 years battery lifetime, with base, tested in accordance with EN 54-7 and EN 54-25, general construction technique permit for use with all GEZE hold-open systems	white RAL 9016	195522
GEZE GC 173 wireless thermal detector for the wireless connection to GEZE hold-open systems, battery-operated with 8 years battery lifetime, with base, tested in accordance with EN 54-7 and EN 54-25, general construction technique permit for use with all GEZE hold-open systems	white RAL 9016	195523
GC 175 wireless input module for wireless connection of manual trigger switches to the GEZE GC 171 wireless module, applicable for all GEZE hold-open systems	black	163068
GC 152 smoke detector Complete with base, 24 V DC, 20 mA, tested in accordance with EN54-7, with general official building approval for use with all GEZE hold-open systems, integrated line monitoring, conform with DIN EN 14637	white	139850
	acc. to RAL	170523
GC 153 wireless thermal detector Complete with base, 24 V DC, 20 mA, tested in accordance with EN54-5, with general official building approval for use with all GEZE hold-open systems, integrated line monitoring, conform with DIN EN 14637	white	139881
	acc. to RAL	170524
Manual trigger switch for the manual release of electrically controlled hold-open devices including terminating resistor for line monitoring	alpine white/red	116266
Surface-mounted box, single suitable for the AS 500 switch programme		120503
Manual trigger switch with glass pane and 5 interchangeable labels for the manual release of electrically controlled hold-open devices	alpine white/red	120880
Replacement glass pane for manual trigger switch 120880 and 120881		010994

1 Only for dry rooms | 2 Surcharge for RAL special colours, see General Notes in the price list.

SWING DOOR

Further information

With overhead door closers with link arm, your swing doors are always closed when they shouldn't be open. As they do not have to be manually closed, they also provide safety in the event of a fire. Tightened legal regulations make overhead door closers with link arm essential for many doors. For every self-locking door and all other needs, GEZE always offers the matching solution. Use our many variants with a wide variety of technical and visual options.

TECHNOLOGY GEZE OVERHEAD DOOR CLOSER TS 4000

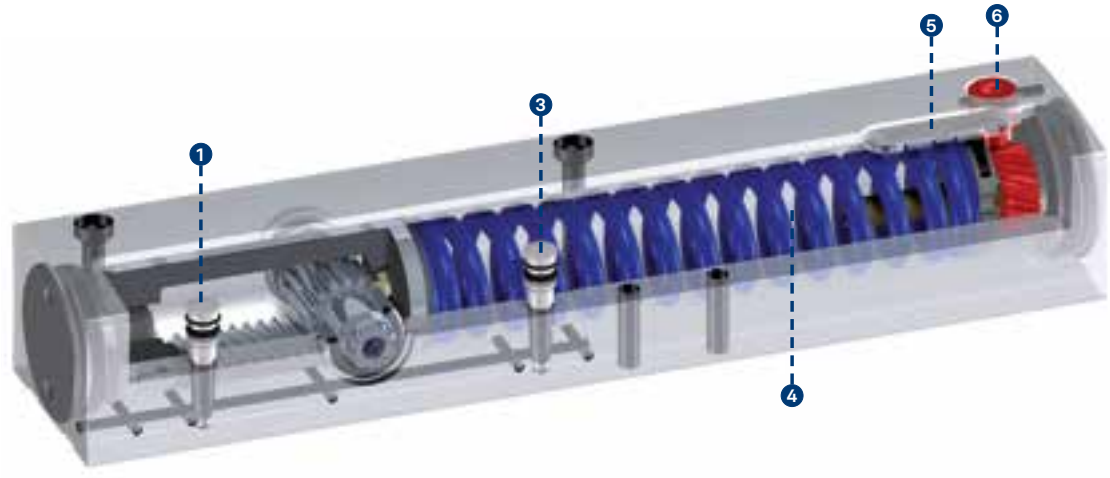

TECHNOLOGY GEZE OVERHEAD DOOR CLOSER TS 2000 NV BC

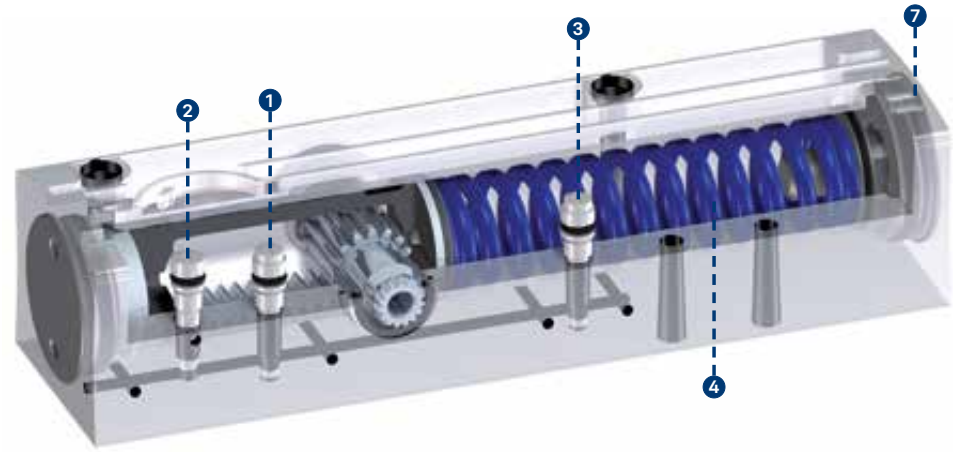

1 = Closing speed setting I 2 = Latching action setting I 3 = Back check setting I 4 = Opening assistance I 5 = Closing force display I
6 = Setting closing force from the front I 7 = Setting closing force from the side

GENERAL PRODUCT FUNCTIONS AND INFORMATION

GEZE DOOR CLOSERS WITH LINK ARM

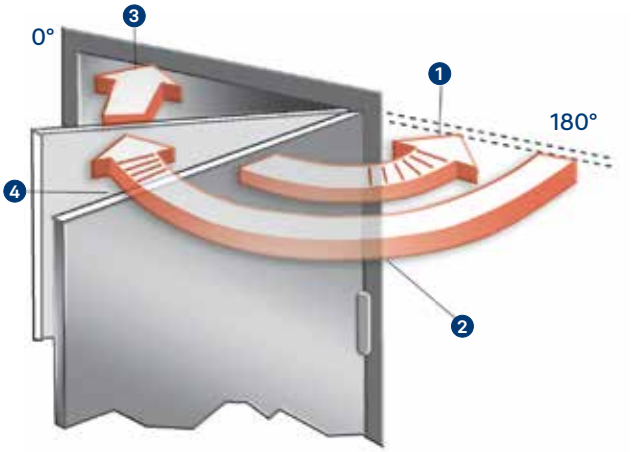

1 = Back check
When doors are pushed open forcefully by approximately 90°, this function is activated in order to slow them down. However, it must not be used as a substitute for separate measures designed to limit the opening angle (such as installation of a door stopper or other structural methods), e.g. in the case of doors that open outwards or are liable to be exposed to the wind.
2 = Closing speed
The speed at which a door closes can be set on an individual basis.
3 = Latching action
When the door is just a few degrees away from reaching the closed position, this function increases the door speed in order to overcome any closing resistance (e.g. in the form of air resistance).
4 = Delayed closing
This function reduces the closing speed of a door or stops the door so that people have enough time to get through it.

GEZE DOOR CLOSERS WITH ADJUSTABLE CLOSING FORCE

The relevant standards stipulate that the closing force (closing force of the closer) must be selected in accordance with the door leaf width. Where necessitated by the structural (door height, door weight) or local conditions (wind), the next closing force up must be set.

The GEZE TS 4000, TS 2000 and their variants offer several door closer sizes in one housing; the desired size can be selected by means of an adjustment screw or by altering the installation position. The TS 4000 features a display so you can see which closing force is currently selected.

Closing force acc. to EN standard	Door leaf width (mm)
Closing force 1	up to 750
Closing force 2	over 750 up to 850
Closing force 3	over 850 up to 950
Closing force 4	over 950 up to 1100
Closing force 5	over 1100 up to 1250
Closing force 6	over 1250 up to 1400
Closing force 7	over 1400 up to 1600

SPECIALLY FOR OPPOSITE HINGE SIDE INSTALLATION

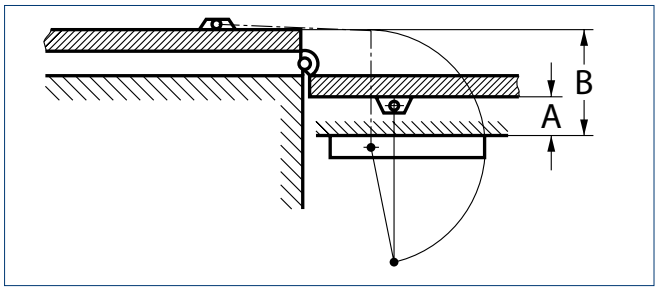

A = Reveal depth
B = Reveal depth +2 Door thickness +2 Pivot point distance
Door opening up to 180° is only possible if the dimensions A = 70 mm and B = 200 mm are not exceeded:

PRODUCT INFORMATION FOR DOOR CLOSERS

Due to the liability the manufacturer has for its products under the German product liability law (§ 4 Prod-HaftG), the following information regarding door closers for swing leaf doors must be observed. Failure to comply releases the manufacturer from his statutory liability.

1) PRODUCT INFORMATION AND USE AS INTENDED

Within this context, door closers are to be defined as products for closing swing leaf doors after they have been opened manually. The closing action is dampened using a hydraulically adjustable feature. The level of closing force needed for specific leaf widths is defined in EN 1154. In the case of non-standard applications, the details provided by the manufacturer are to be regarded as definitive. Door closers are used on installed swing leaf doors made from metal, timber or plastic and combinations thereof. When used on smoke and fire protection doors or other standardised self-locking doors, they are subject to strict requirements in terms of the type of installation and their position. Any deviation from these requirements constitutes improper use.

Proper use of door closers (use as intended) relies on doors being installed perpendicular and their being able to move smoothly; it is also dependent on the door closers being properly secured. The products must be installed and adjusted professionally in accordance with the manufacturer's specifications.

Where local conditions are particularly unfavourable (wind), door closers with higher torques must be used.

It is particularly important to use door closers with a back check function on swing leaf doors that are exposed to wind when opening outwards. The back check function helps protect people, door elements, nearby walls and objects, without restricting the door opening angle. If the structural conditions of the door are such that there is a risk of the door leaf hitting the frame in the vicinity of the door's axis of rotation, a buffer must be installed to limit the door's maximum opening angle. If swing leaf doors are to be fixed in the open position, this may only be achieved using special additional fittings or integrated constructional elements. When used on smoke and fire protection doors, the devices must be officially approved by Deutsches Institut für Bautechnik (German Centre of Competence for Construction) (door suitability certificates must be heeded).

Door closers are not suitable for installation on swing leaf doors in the case of exposed exterior installation or for installation in environments where the air contains aggressive, corrosive substances or in extremely high or low temperatures.

Following installation, enclosures for floor springs must be protected against soiling. If floor springs are exposed to penetrating water such as wet rooms or exterior doors with no protection from the rain, the area between the cement box and the floor spring cover must be sealed with a suitable sealing compound.

Compliance with mandatory statutory provisions must be ensured, where applicable, before door closers (including any additional devices) are installed and commissioned.

2) MISUSE

Misuse (i.e. improper use of door closer products for swing leaf doors) includes, in particular:

- the presence of obstacles in the closing area, scraping doors, sticking seals, wooden wedges, etc. that hinder the door's closing action.
- incorrect or improper mounting and/or adjustment
- reaching into the area between the door frame and leaf (risk of injury),
- if the warranted properties are likely to trigger proper functioning, e.g. in case of storms or unusual levels of overpressure or underpressure acting on the door
- if door closers are used for any purpose other than closing doors
- if the selected closing force does not tally with the manufacturer's recommendations

3) PRODUCT PERFORMANCE

Where catalogues, brochures, manuals, etc. do not contain specific details of product performance, special requirements must be discussed and agreed with the manufacturer.

The EN 1154 standards serve as a guideline. These standards stipulate the vast majority of basic and additional requirements. Amongst other things, the usability of door closers depends on how often they are operated, how they are operated, environmental influences and how they are cared for. Door closers must be replaced as soon as the door's closing action can no longer be guaranteed to be fault-free and reliable.

4) PRODUCT MAINTENANCE

Safety-related components of door closers must be checked regularly for tightness and signs of wear (depending on what the requirements are). Fixing screws must be re-tightened and defective components replaced. In addition, the following maintenance work must be carried out at least once a year (depending on the swing leaf door type and extent of use.

- Grease all moving parts on the link arm.
- In the case of door closers with special functions (hold-open devices and hold-open systems), ensure compliance with statutory inspections, monitoring demands and suggested maintenance intervals.
- Check the door closer settings e.g. the closing speed.
- Check that the door is able to move easily.

Do not use any cleaning agents that contain corrosive or damaging ingredients.

5) DUTIES TO INFORM AND INSTRUCT

The following resources are available to help planners, specialist suppliers, installation companies, builders and users fulfil their duties of information and instruction:

- Catalogues, brochures, leaflets,
- Tender texts, bidding documents,
- Attachment instructions, installation drawings, operating instructions, standards
- Advice from field staff.

To ensure correct use of door closers on swing doors, guarantee their function and make sure they are maintained and cared for appropriately:

- Architects and planners are advised to order and observe the necessary product information
- Specialist suppliers are advised to observe the product information and advice in the price lists and, in particular, to order all relevant instructions, which are to be passed on to the installation engineer,
- Installation engineers are advised to observe all the product information and to pass it on the client and user.

COVER CAPS FOR GEZE DOOR CLOSERS

The following cover caps are available for the TS 2000 and TS 4000 overhead door closers:

→ silver-coloured

→ dark bronze

→ white RAL 9016

→ polished brass

→ stainless steel

Further RAL colours on request.

We are GEZE.

For liveable buildings

GEZE stands for innovation, high quality and comprehensive support of building technologies. From the initial idea, planning and operational implementation with standard products to customised system solutions and individual service and maintenance plans. We offer an extensive product range of door, window and safety technology products and are a major driving force behind the digital networking of building automation.

GEZE GmbH

Reinhold-Vöster-Straße 21 – 29

71229 Leonberg

Deutschland

Telefon: +49 7152 203 0

Telefax: +49 7152 203 310

E-Mail: info.de@geze.com

www.geze.com

2020_12 ID no. 091594 EN Subject to change without notice