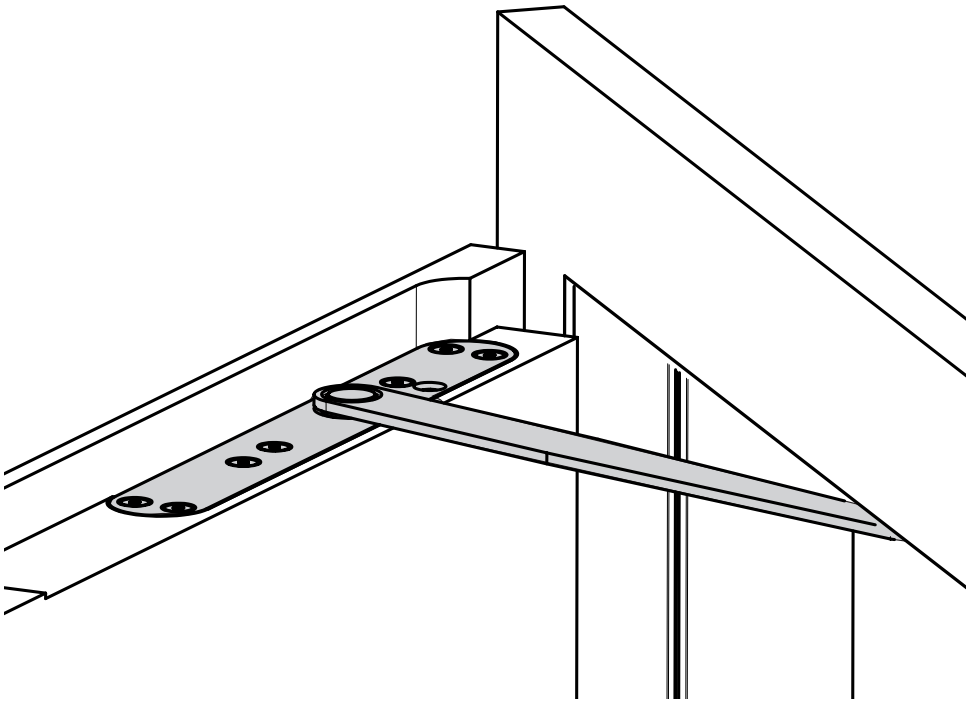

GEZE ActiveStop

DE integriert

EN integrated

FR integré

ES integrado

182267-00

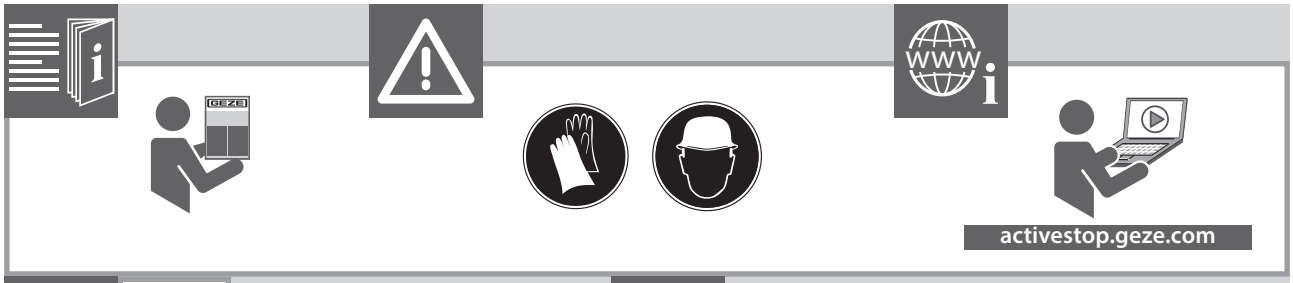
activestop.geze.com

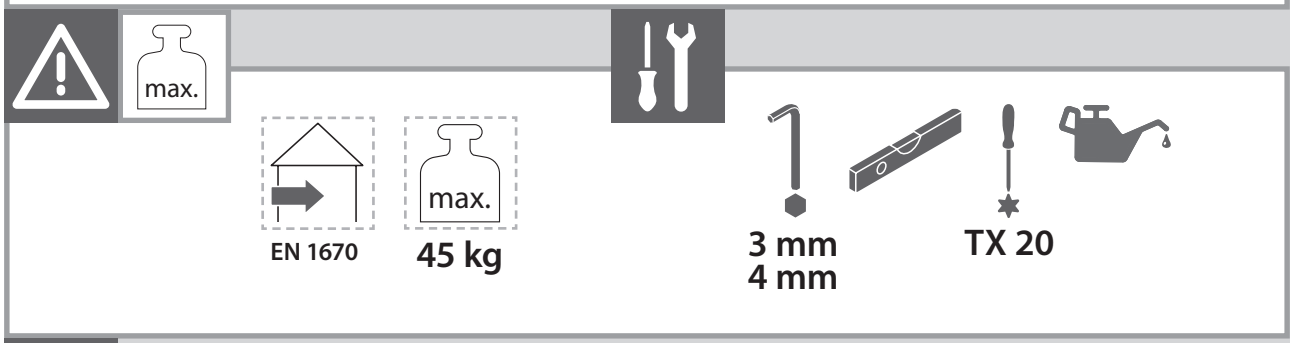
max.
EN 1670
max.
45 kg
3 mm
4 mm
TX 20

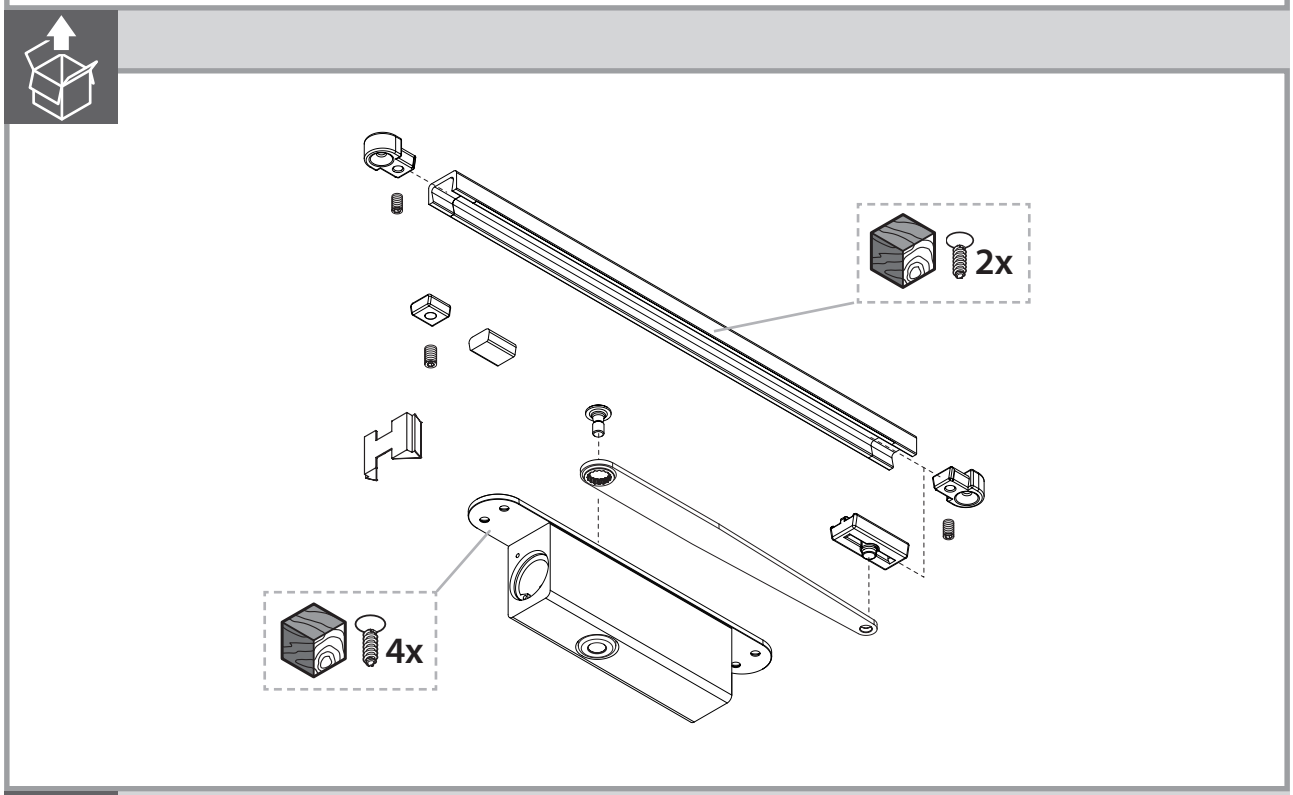
2x
4x

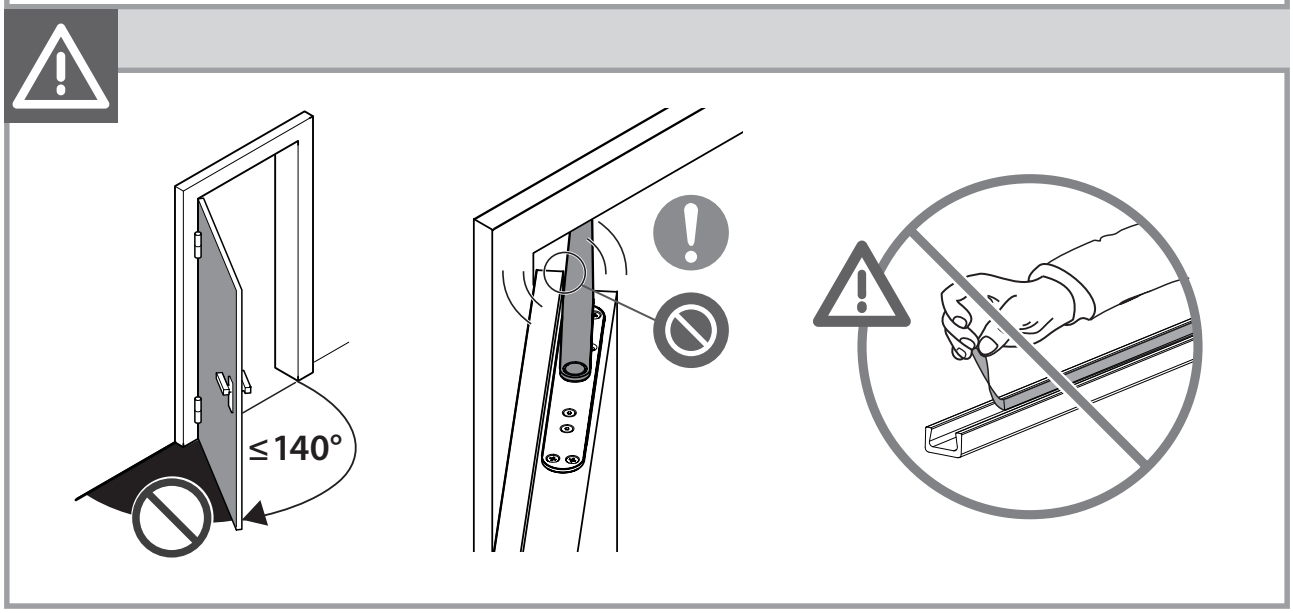
≤ 140°

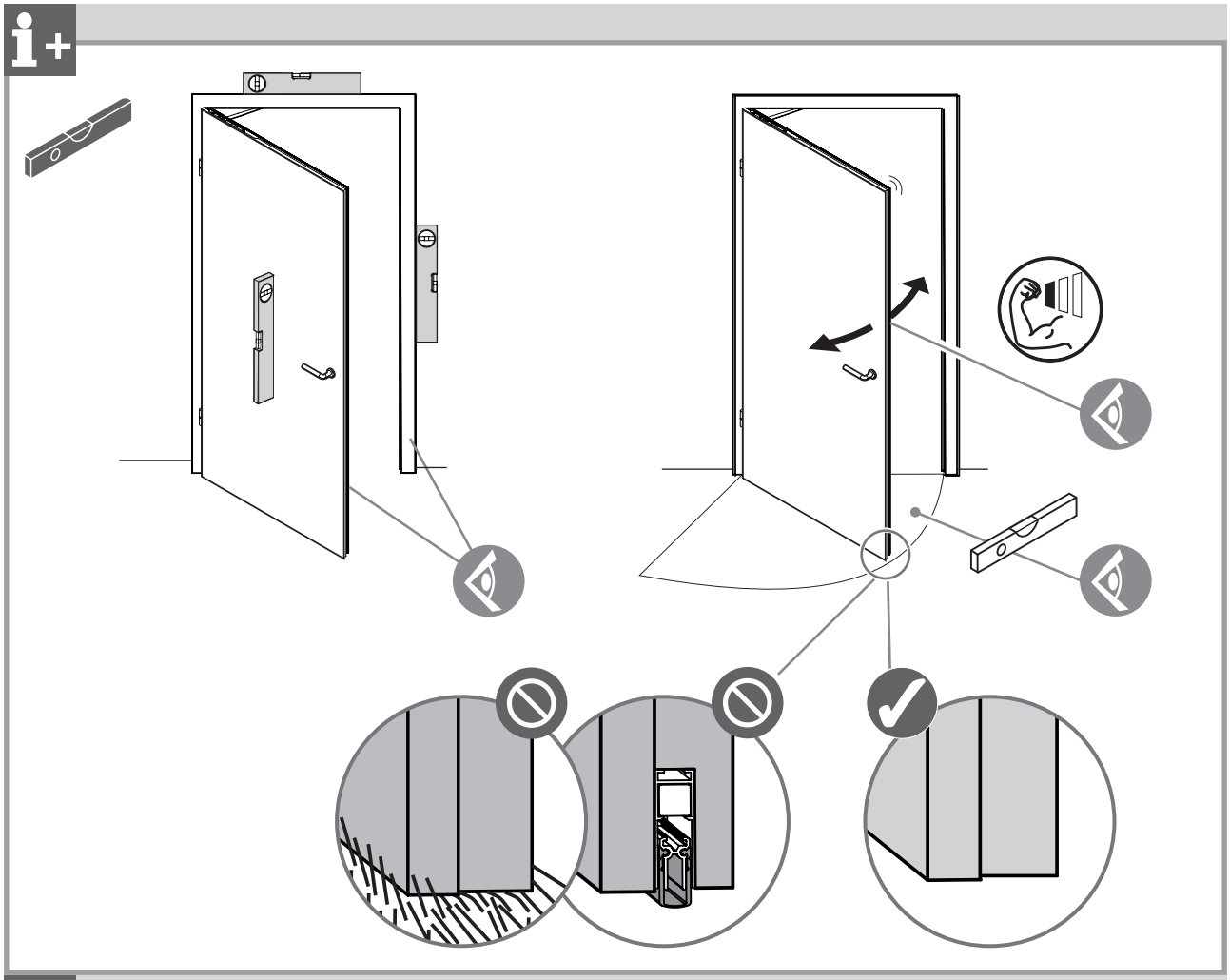

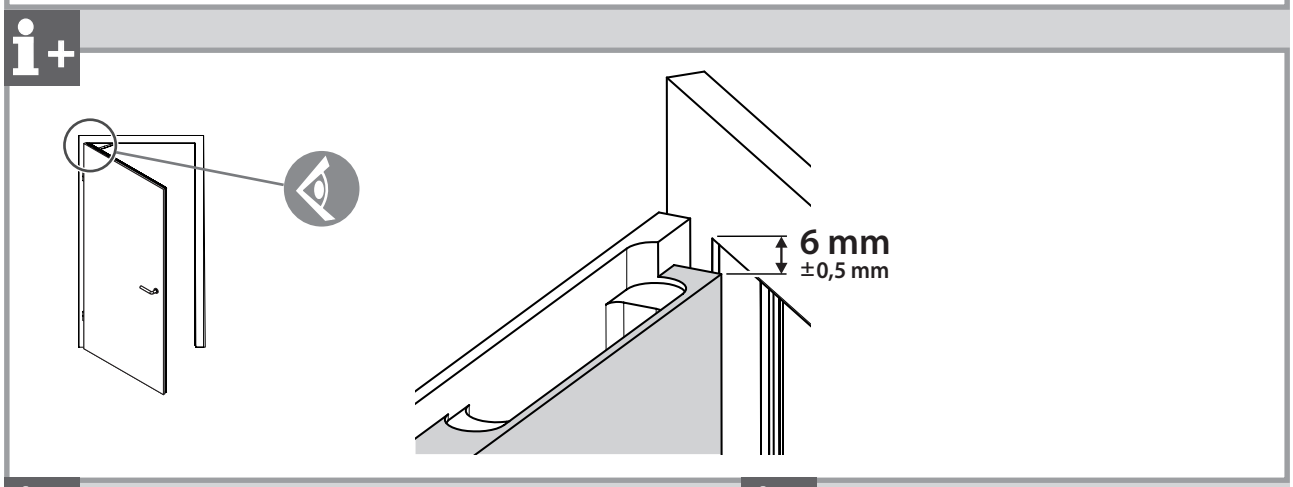
6 mm
±0,5 mm

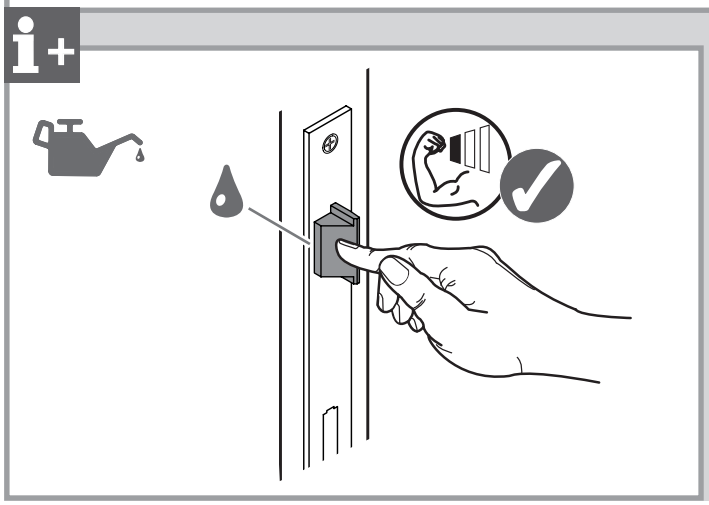

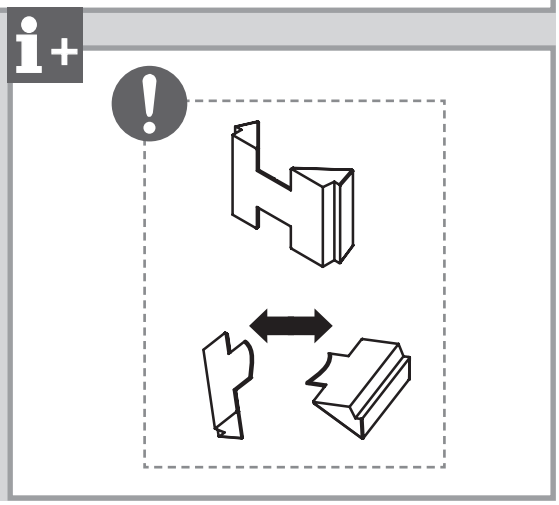

1

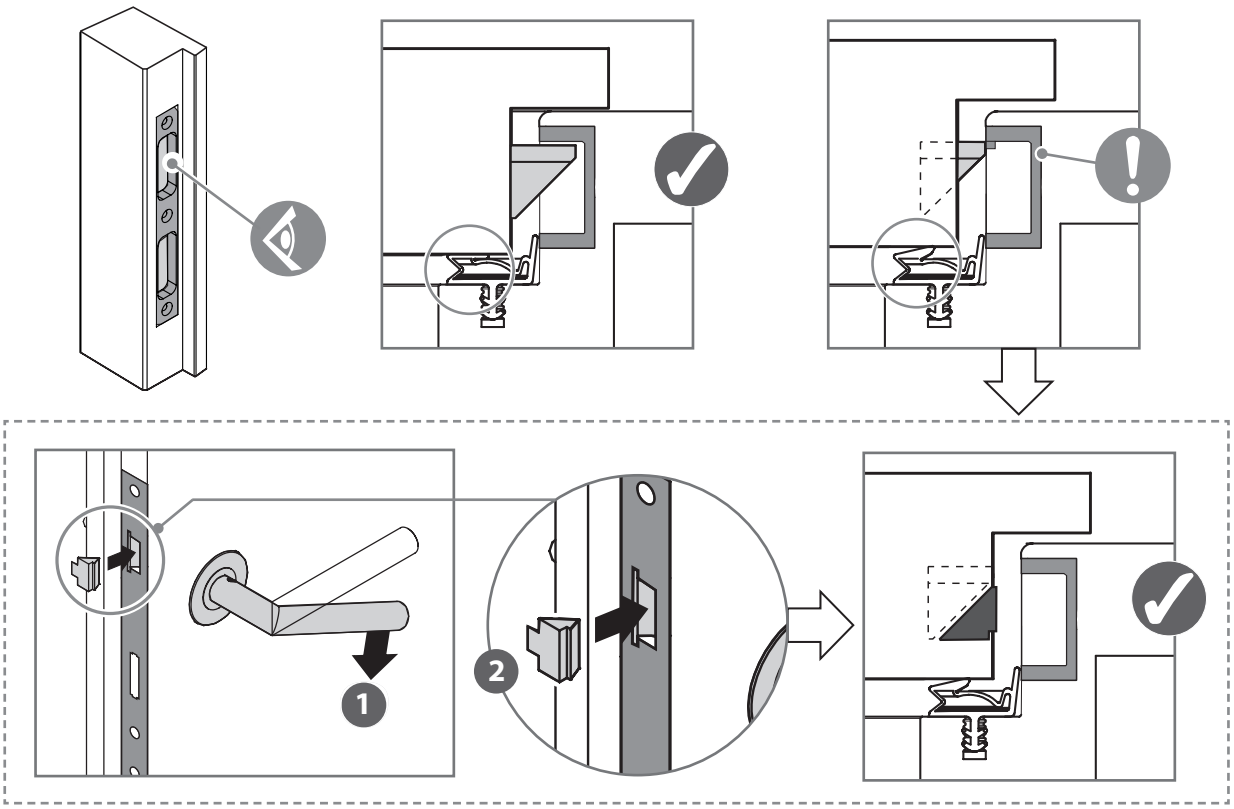

2

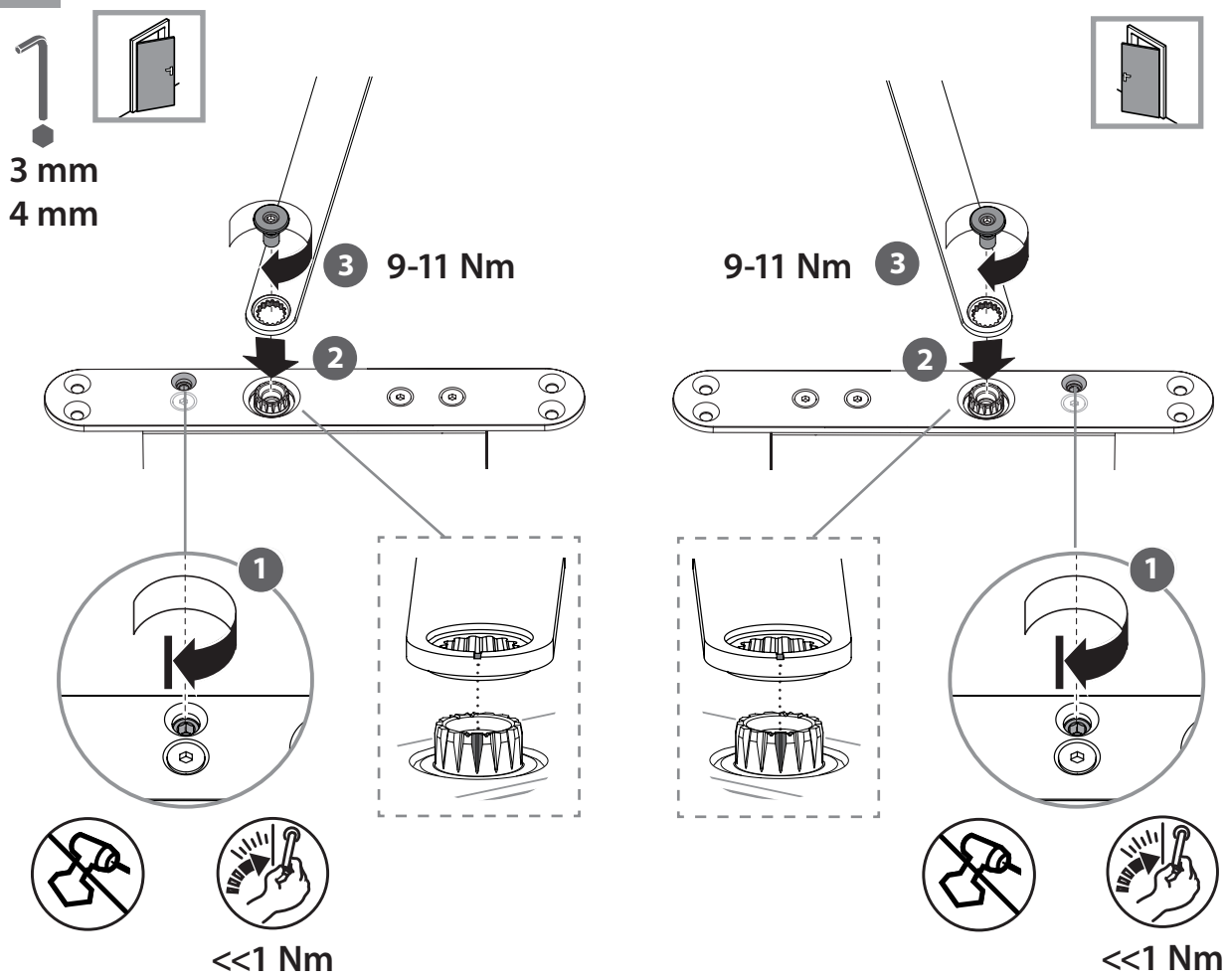

GEZE

3

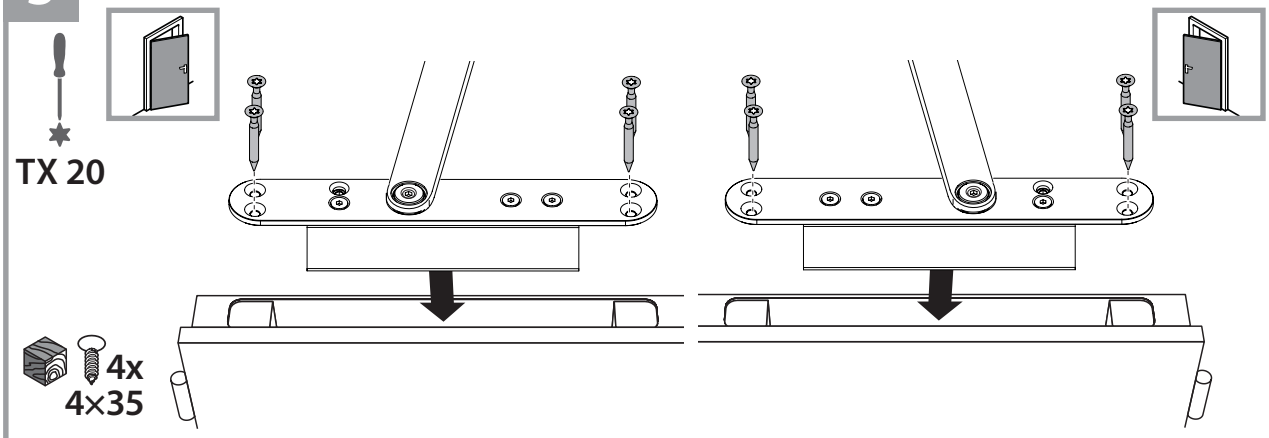

4

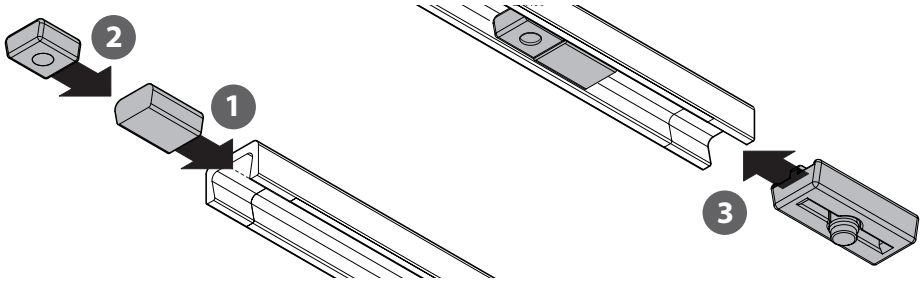

5

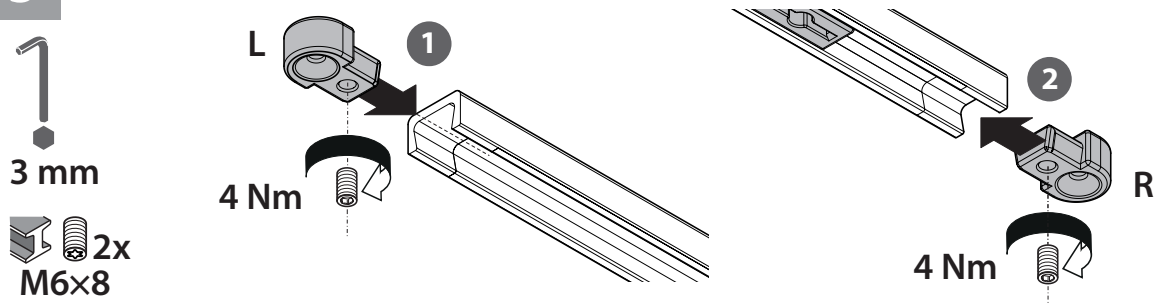

6

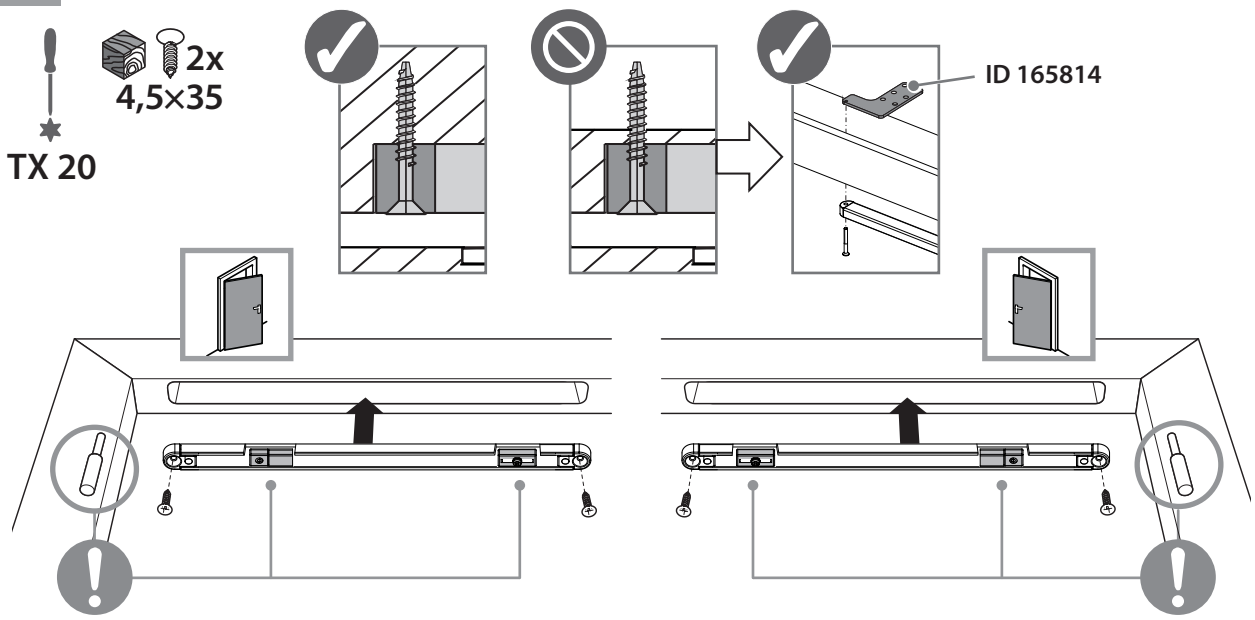

7

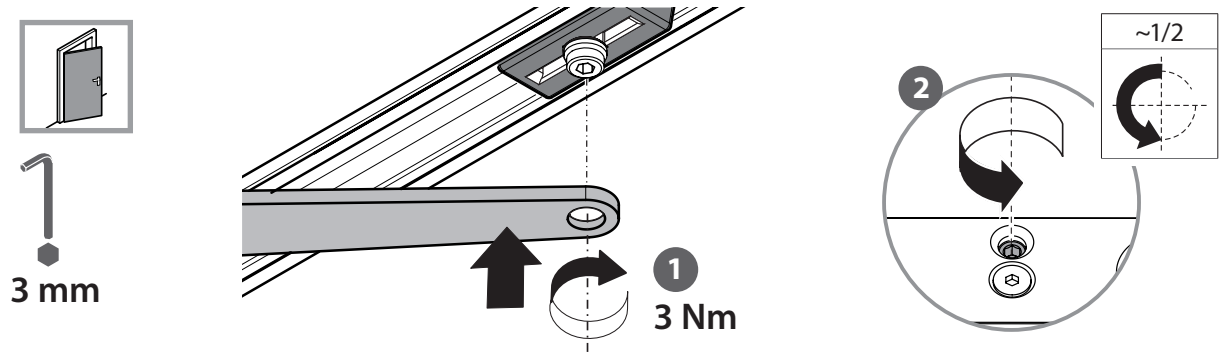

8

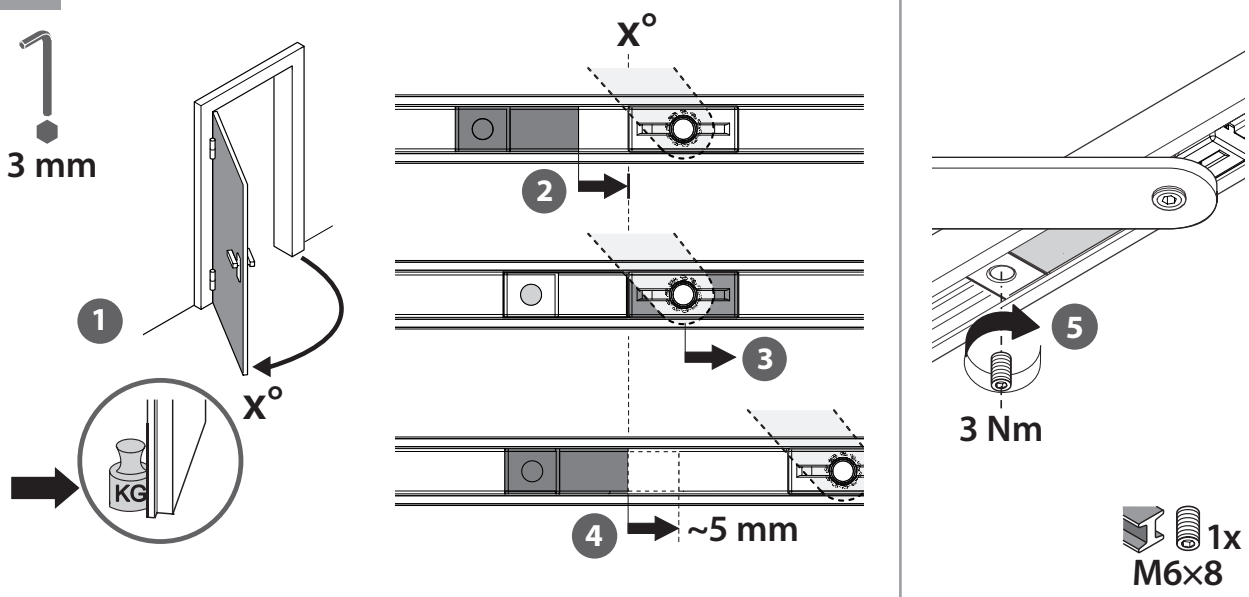

9

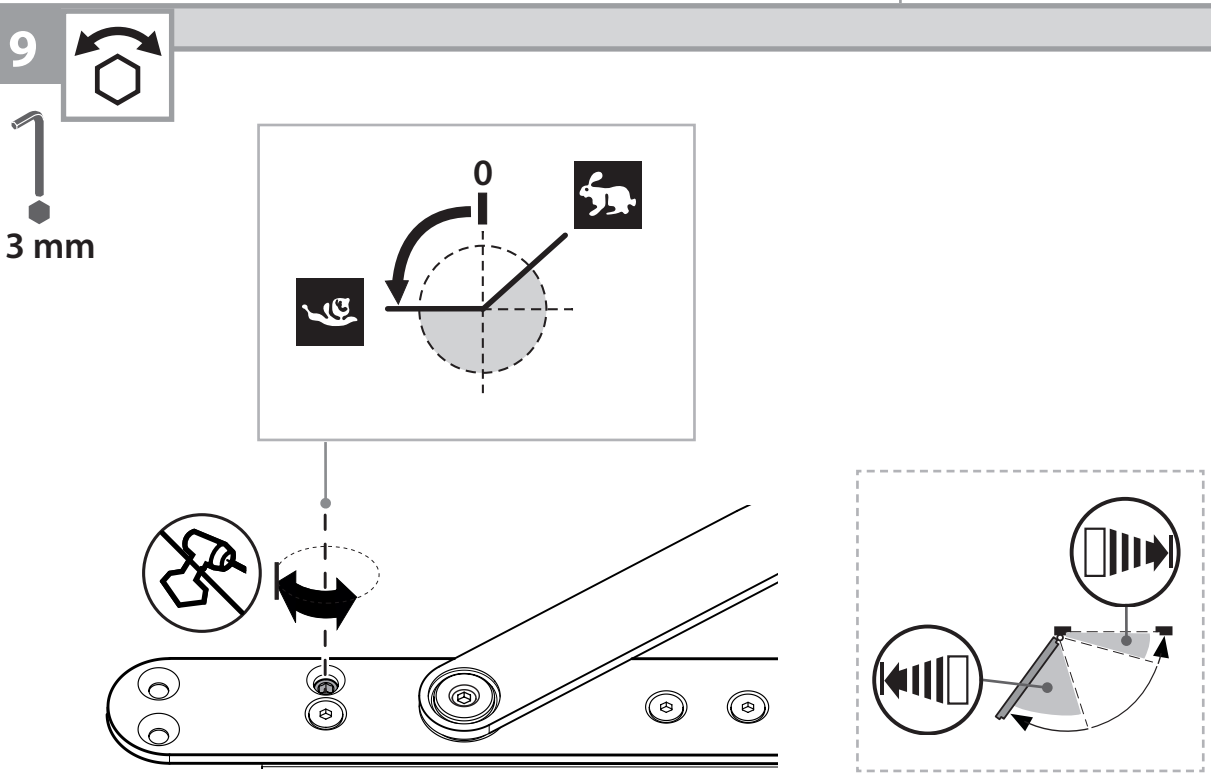

GEZE

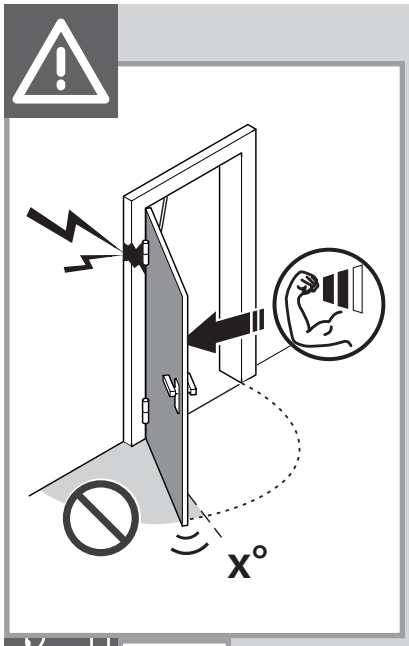
X°

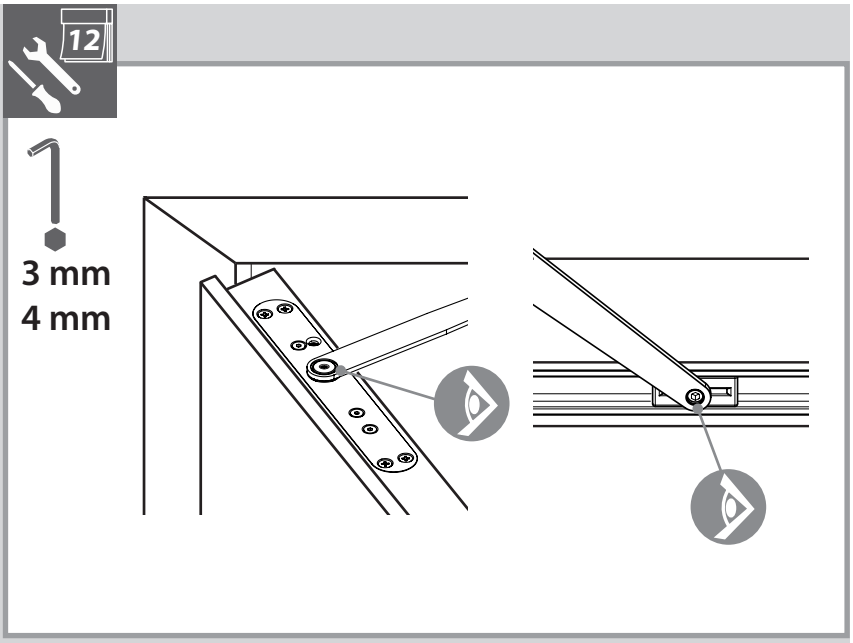
12
3 mm
4 mm

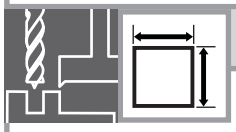

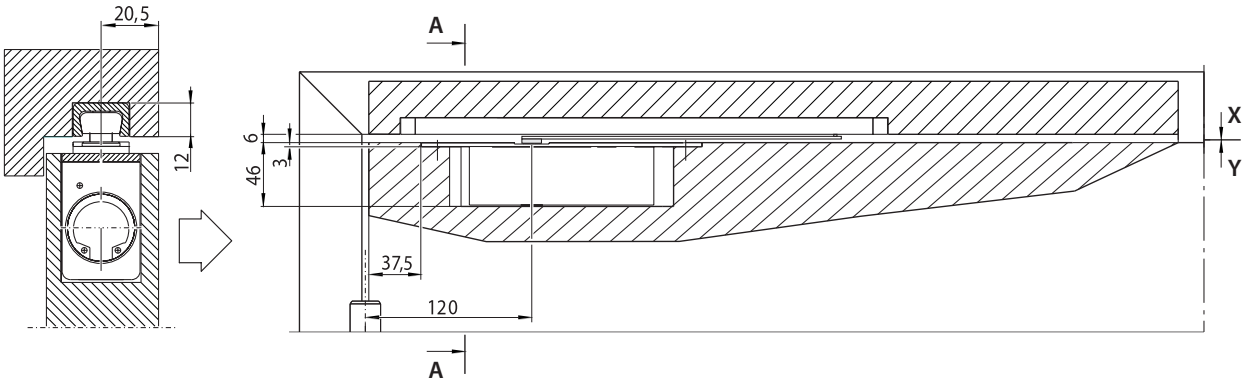
20,5
12
A
6
3
46
37,5
120
X
Y
A

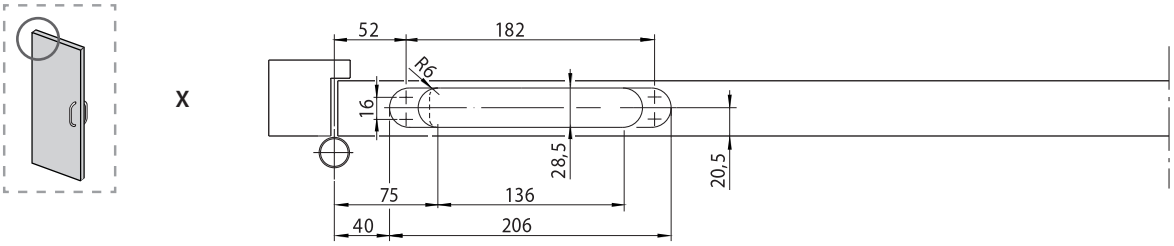
X
52
182
R6
16
28,5
20,5
75
136
40
206

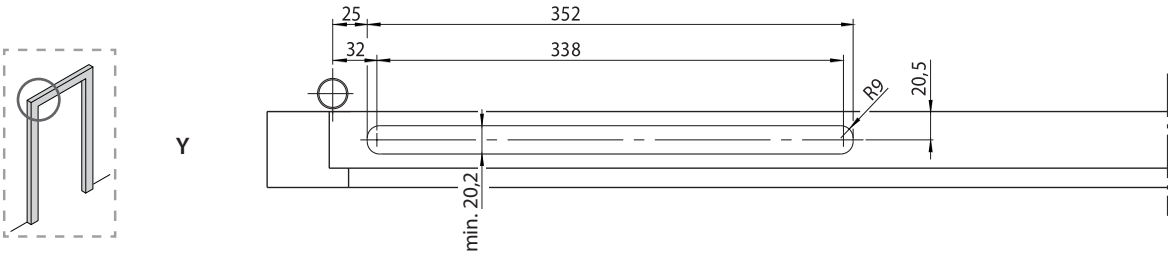
Y
25
352
32
338
R9
20,5
min. 20,2

Germany
GEZE GmbH
Niederlassung Süd-West
Tel. +49 (0) 7152 203 594
E-Mail: leonberg.de@geze.com

GEZE GmbH
Niederlassung Süd-Ost
Tel. +49 (0) 7152 203 6440
E-Mail: muenchen.de@geze.com

GEZE GmbH
Niederlassung Ost
Tel. +49 (0) 7152 203 6840
E-Mail: berlin.de@geze.com

GEZE GmbH
Niederlassung Mitte/Luxemburg
Tel. +49 (0) 7152 203 6888
E-Mail: frankfurt.de@geze.com

GEZE GmbH
Niederlassung West
Tel. +49 (0) 7152 203 6770
E-Mail: duesseldorf.de@geze.com

GEZE GmbH
Niederlassung Nord
Tel. +49 (0) 7152 203 6600
E-Mail: hamburg.de@geze.com

GEZE Service GmbH
Tel. +49 (0) 1802 923392
E-Mail: service-info.de@geze.com

Austria
GEZE Austria
E-Mail: austria.at@geze.com
www.geze.at

Baltic States –
Lithuania / Latvia / Estonia
E-Mail: baltic-states@geze.com

Benelux
GEZE Benelux B.V.
E-Mail: benelux.nl@geze.com
www.geze.be
www.geze.nl

Bulgaria
GEZE Bulgaria - Trade
E-Mail: office-bulgaria@geze.com
www.geze.bg

China
GEZE Industries (Tianjin) Co., Ltd.
E-Mail: chinasales@geze.com.cn
www.geze.com.cn

GEZE Industries (Tianjin) Co., Ltd.
Branch Office Shanghai
E-Mail: chinasales@geze.com.cn
www.geze.com.cn

GEZE Industries (Tianjin) Co., Ltd.
Branch Office Guangzhou
E-Mail: chinasales@geze.com.cn
www.geze.com.cn

GEZE Industries (Tianjin) Co., Ltd.
Branch Office Beijing
E-Mail: chinasales@geze.com.cn
www.geze.com.cn

France
GEZE France S.A.R.L.
E-Mail: france.fr@geze.com
www.geze.fr

Hungary
GEZE Hungary Kft.
E-Mail: office-hungary@geze.com
www.geze.hu

Iberia
GEZE Iberia S.R.L.
E-Mail: info.es@geze.com
www.geze.es

India
GEZE India Private Ltd.
E-Mail: office-india@geze.com
www.geze.in

Italy
GEZE Italia S.r.l
E-Mail: italia.it@geze.com
www.geze.it

GEZE Engineering Roma S.r.l
E-Mail: italia.it@geze.com
www.geze.it

Korea
GEZE Korea Ltd.
E-Mail: info.kr@geze.com
www.geze.com

Poland
GEZE Polska Sp.z o.o.
E-Mail: geze.pl@geze.com
www.geze.pl

Romania
GEZE Romania S.R.L.
E-Mail: office-romania@geze.com
www.geze.ro

Russia
OOO GEZE RUS
E-Mail: office-russia@geze.com
www.geze.ru

Scandinavia – Sweden
GEZE Scandinavia AB
E-Mail: sverige.se@geze.com
www.geze.se

Scandinavia – Norway
GEZE Scandinavia AB avd. Norge
E-Mail: norge.se@geze.com
www.geze.no

Scandinavia – Denmark
GEZE Danmark
E-Mail: danmark.se@geze.com
www.geze.dk

Singapore
GEZE (Asia Pacific) Pte, Ltd.
E-Mail: gezesea@geze.com.sg
www.geze.com

South Africa
GEZE South Africa (Pty) Ltd.
E-Mail: info@gezesa.co.za
www.geze.co.za

Switzerland
GEZE Schweiz AG
E-Mail: schweiz.ch@geze.com
www.geze.ch

Turkey
GEZE Kapı ve Pencere Sistemleri
E-Mail: office-turkey@geze.com
www.geze.com

Ukraine
LLC GEZE Ukraine
E-Mail: office-ukraine@geze.com
www.geze.ua

United Arab Emirates/GCC
GEZE Middle East
E-Mail: gezeme@geze.com
www.geze.ae

United Kingdom
GEZE UK Ltd.
E-Mail: info.uk@geze.com
www.geze.com

GEZE GmbH
Reinhold-Vöster-Straße 21–29
71229 Leonberg
Germany

Tel.: 0049 7152 203 0
Fax.: 0049 7152 203 310
www.geze.com

Der Maßstab DIN ISO 9001 unseres Handelns

GEZE