Hawa
Sliding Solutions

On buildings

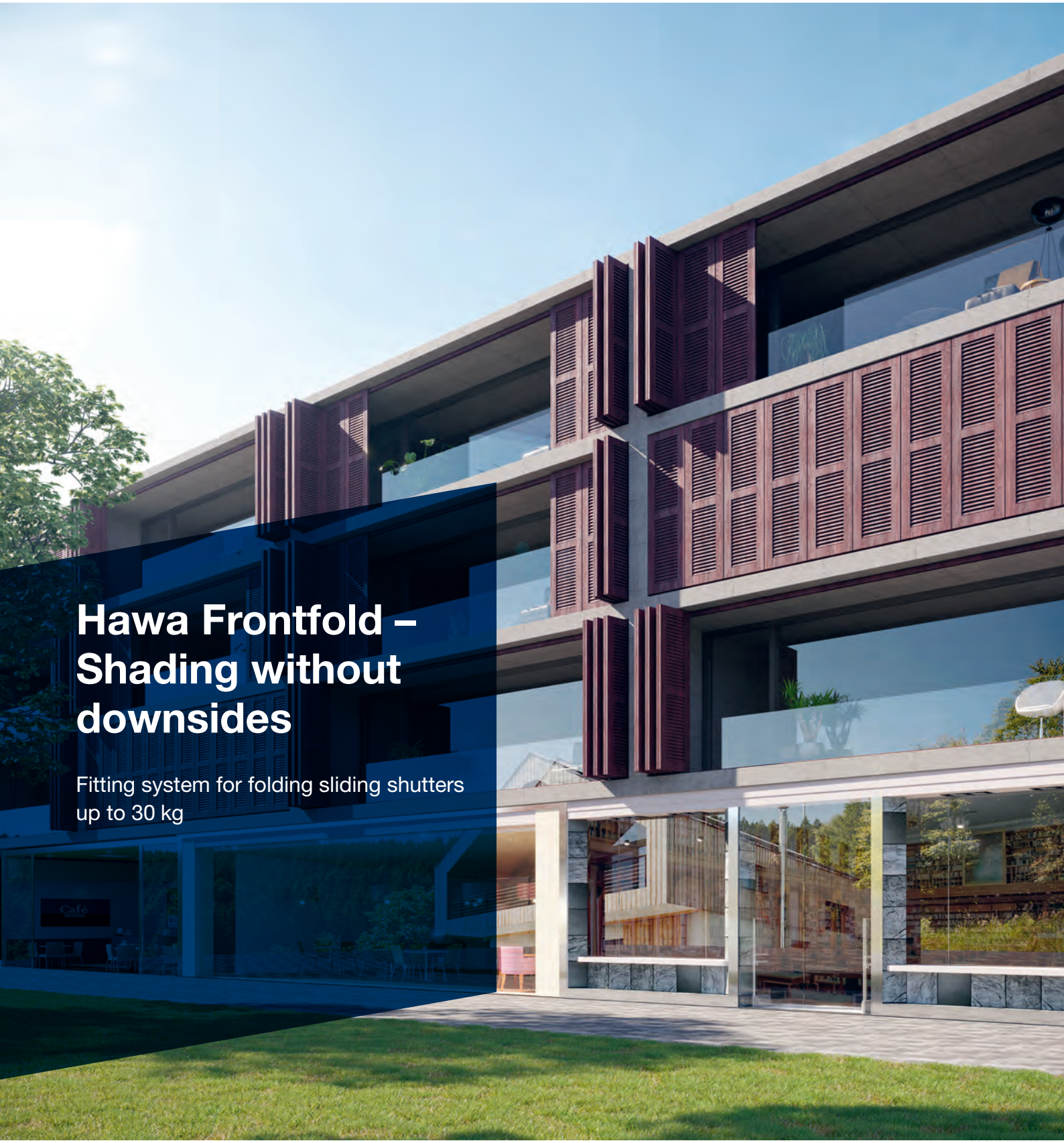

Hawa Frontfold – Shading without downsides

Fitting system for folding sliding shutters up to 30 kg

www.hawa.com

2 The world of sliding

2 Areas of application and forms
4 Benefits on buildings

6 Hawa Frontfold family

8 Hawa Frontfold

10 Hawa Frontfold 30 FS uo
14 Hawa Frontfold 30 FS oo
19 Hawa Frontfold 30 MS uo
23 Hawa Frontfold 30 MS oo
28 Hawa Frontfold 30 IS

		X
		X
	X	
	X	
X		

33 Order overview

33 Hawa Frontfold 30
Order overview

34 Product overview on buildings

36 Technical information
38 Contacts
40 Product overview
On buildings / In buildings / On furniture

Protection of trademarks/Copyright

Hawa is a trademark registered in the name of Hawa Sliding Solutions AG. The names Junior, Concepta, Clipo and Frontino are product family names, which either registered to Hawa Sliding Solutions AG or for which Hawa Sliding Solutions AG claims exclusive rights of use in connection with their product and service offers. The contents of this publication, including all photographs and graphics are protected by copyright, and may not be copied, modified or otherwise used without the explicit consent of Hawa Sliding Solutions AG.

General Terms and Conditions

Sales, delivery, and payment terms are subject to the general terms and conditions of Hawa Sliding Solutions AG, which can be found under www.hawa.com.

Areas of application and forms

Creative and functional added value on buildings, in buildings and on furniture

Access for light, air and people must be created and implemented in every building, room and furniture item. Sliding solutions are the superior approach for aesthetic, functional and cost-effective design.

On buildings

Architecture comes to life.

– Sliding shutters
– Folding sliding shutters

In buildings

Rooms become flexible and of high quality.

– Sliding doors
– Sliding walls
– Folding sliding walls
– Showers

On furniture

The right application for every design idea.

– Sliding doors
– Pivot and folding/sliding doors
– Folding sliding doors

Specific types of sliding solve every task for every environment.

Parallel sliding alone isn't enough to cover every need. Therefore, we have developed extended solutions such as folding, pivoting, slide-in and stacking.

Sliding

Folding sliding

Pivot sliding

Pivot folding

Sliding + stacking

A statement that communicates thinking and acting simultaneously
The façade is the face of the building. Sliding technologies enable the individual presentation of the client's personality. At the same time, they offer numerous opportunities to increase the functional benefits and energy efficiency of buildings.

How you build says a lot about you
Sliding solutions for use on buildings give façades a unique look

Architecture is brought to life by the people who experience and use it. It does not just give the building its aesthetic form, but also creates added value which first manifests itself during everyday living and working.

The face of a building is given variable expressions by means of sliding technology. Regardless of whether the façade is to be open or closed depending on the time of day, whether it needs to withstand certain climatic influences or it needs to convey a unique architectural idea – sliding technology is the key to the best and most individual solution.

Sliding on buildings has many facets.
- Versatile solution for sliding shutters and window fittings
- Wide range of options for design and temperature management
- Open to every conceivable material

A general overview of all solutions for sliding on buildings is provided in the product overview starting on page 40.

Free view to the outside
Privacy should only work in one direction.

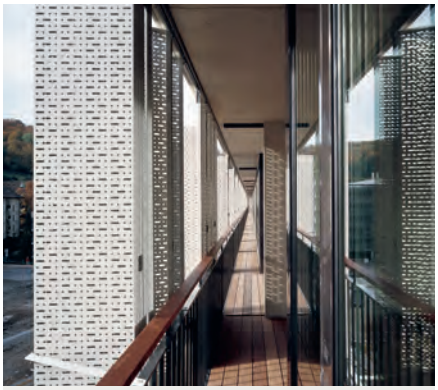

Shadow wanders
Sliding applications provide shade as the sun travels across the sky.

Individuality lives
The flexible design of the façade gives a building more than just one face.

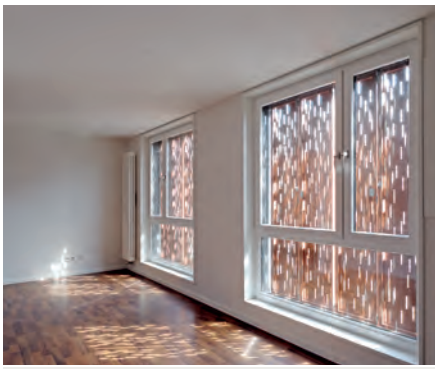

Climate protection on buildings
Sliding solutions reduce expensive measures for heating or cooling.

Fitting system for folding sliding shutters up to 30 kg

The Hawa Frontfold family – shading without downsides

Sliding solutions on buildings set distinctive accents in the overall architectural picture. They are the first business card of building architecture, an expression of design identity, the make-up on the face of the house. And they offer functional benefits that are in no way inferior to the visual ones. The Hawa Frontfold folding sliding system proves that most impressively. This fitting makes it easy as pie to slide wooden or aluminum shutters and store them folded in a small space at a 90 degree angle to the window front. Inside, it opens up a wide range of possibilities for residents for fascinating light and shadow interactions. Outside, it creates the picture of a lively, changeable façade. It also benefits the climate: Variable outside shading on sunlit windows can keep the inside temperature considerably lower. Especially since the Hawa Frontfold unfolds its qualities even on large areas.

Sliding shutters ...
Sliding shutters offer effective, convenient privacy and sun protection and set exciting accents in the façade design of private and public buildings.

... with Hawa Frontfold
Using this well-designed, aesthetic folding sliding system, wooden and aluminum shutters up to 30 kg can be moved easily and stored to save space.

Hawa Frontfold
for folding sliding shutters

Shutters to push, fold, and enjoy

Hawa Frontfold for folding sliding shutters
Gives wings to the individual façade design

They radiate character, create exciting lighting situations, save space: Folding sliding shutters look good on any façade. And the innovative Hawa Frontfold 30 offers an optimal solution for every façade: with Forslide, Inslide and Mixslide constructions, inward and outward folding shutters, in even or odd leaf numbers. It not only offers the widest systems (up to 12 m), but also the widest range. And impressive comfort: Thanks to high-quality UV-resistant plastic rollers with friction bearings, shutters up to 30 kg can be pushed and folded with one hand.
For years and years: Tests and certificates attest to the Hawa Frontfold's extremely high ability to withstand stress, wind resistance, and corrosion resistance. However, little of all these benefits is visible. Since the hinges are invisible from the outside, gap sizes can be reduced to 1 mm and, with the Forslide version, the tracks even disappear behind the closed leaves.

Area of application

Façade design on private and public buildings

System advantages

Flexibility	**Forslide, Inslide and Mixslide** as well as folding towards the inside and the outside Up to **10-leaf systems per side** shading fronts up to 12 m long with even or odd number of leaves
Productivity	**Drilling jig** for the hinges **simplifies pre-installation** **Height adjustment via the hanger bolt** with standard tools
Comfort	**Independent locking of the running gears** for folded shutters by clipping in
Aesthetics	With the **Forslide version, the tracks disappear** behind the closed doors
Security	**Corrosion-resistant materials** for use in coastal areas without reservations

Technical specifications

	Max.	30 kg
	Max.	3200 mm
	Max.	600 mm
		28–36 mm

Good to know (accessories)

- Tension latch with stainless steel cable
- Stainless steel rotary handle
- Hinges for minimal gap sizes

Installation examples

Hawa Frontfold 30 FS

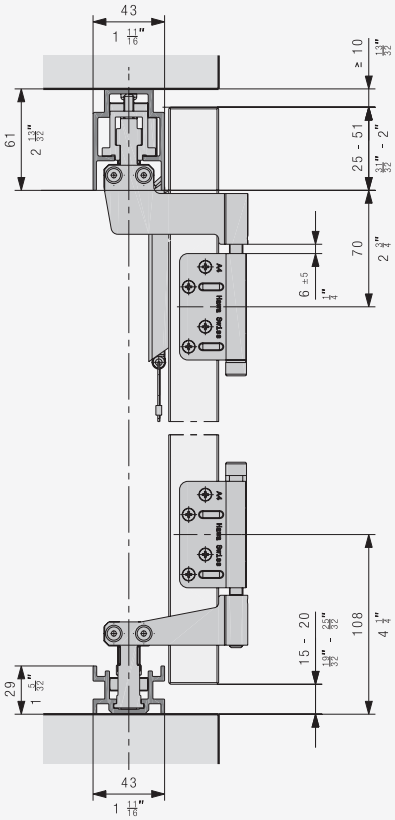

Hawa Frontfold 30 MS

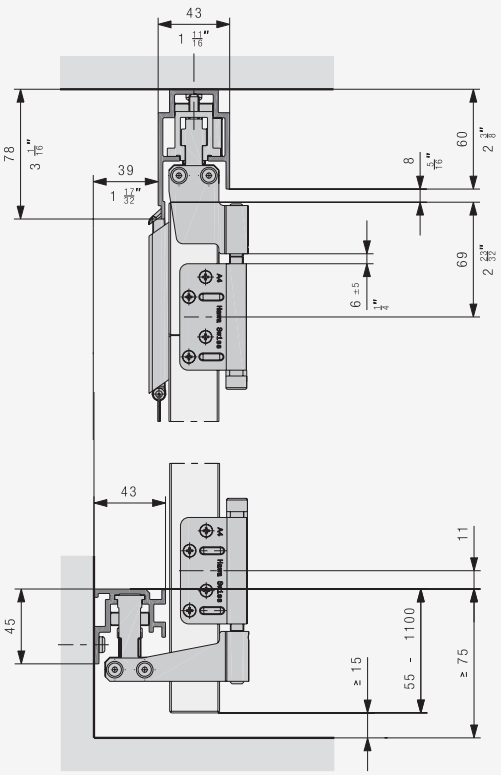

Hawa Frontfold 30 IS

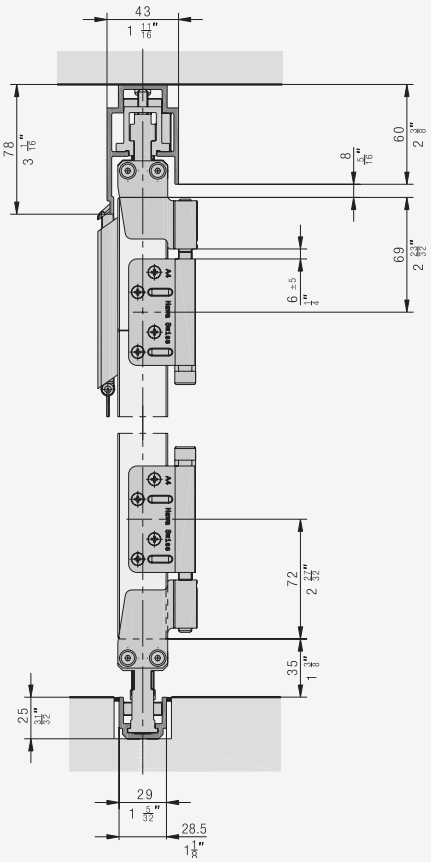

Fitting for 2–10 folding sliding shutters made of wood or metal up to 30 kg per shutter and 180 kg per system, with concealed running and guide tracks. Design Forslide, open at the bottom.

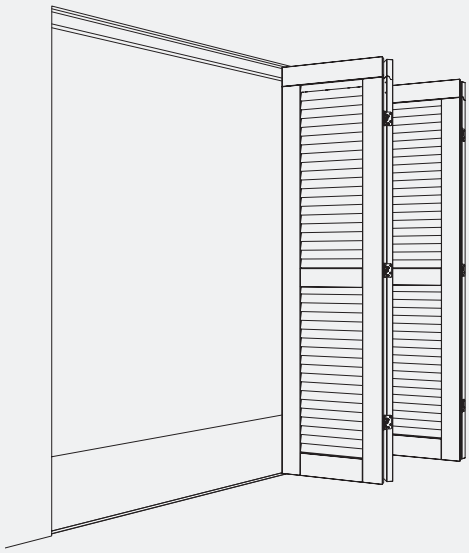

Product highlights

Aesthetics Harmonious combination of shutters and façade, since the running and guide tracks disappear behind the closed shutter

Flexibility Solution for any construction situation with doors of up to 1.2 m² and 30 kg, even/odd number of doors and system width of up to 12 m

Technical specifications

Max.	30 kg (66 lbs.)
Max.	3200 mm (10'5 31/32")
Max.	600 mm (1'11 5/8")
	28–36 mm (1 3/32"–1 13/32")

Installation examples

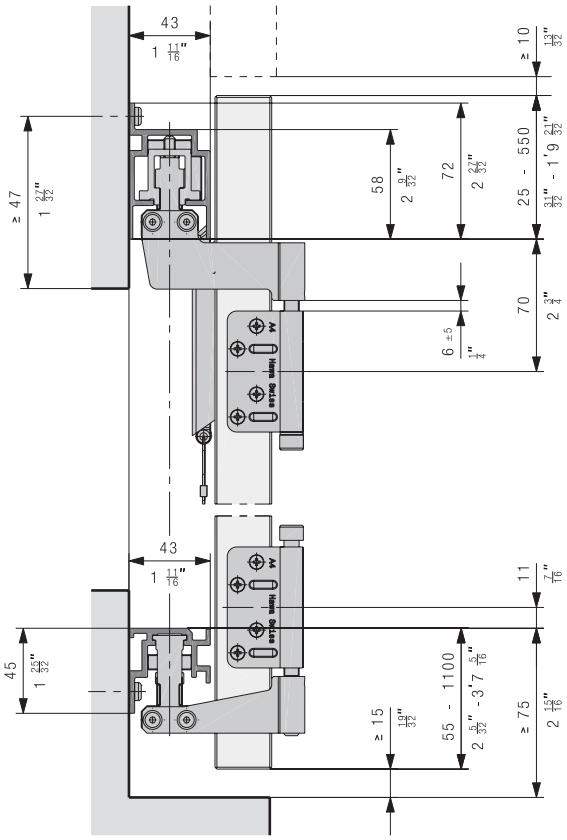

Set for folding packages

		No.
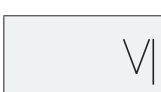	Hawa Frontfold 30 FS, basic set right, guide track open at the bottom	27555
	Hawa Frontfold 30 FS, basic set left, guide track open at the bottom	27556
	Hawa Frontfold 30 FS, additional set, guide track open at the Bottom	27557

Set consisting of:

		27555	27556	27557	No.
	Fixed suspension, Forslide, folding to the right	1			27517
	Running gear outside, Forslide, folding to the right	1			27519
	Fixed guide, Forslide, folding to the right, guide track open at the bottom	1			27528
	Outside guide, Forslide, folding to the right, guide track open at the bottom	1			27529
	Cylinder screw, M8x100 mm, A4-70	4	4	2	27401
	Hinge ring, plastic	2	2	1	15740
	Hinge plate cranked, one-piece, stainless steel A4	4	4		27418
	Fixed suspension, Forslide, folding to the left		1		27518
	Running gear outside, Forslide, folding to the left		1		27520
	Fixed guide, Forslide, folding to the left, guide track open at the bottom		1		27527
	Outside guide, Forslide, folding to the left, guide track open at the bottom		1		27530
	Centre running gear, Forslide			1	27521
	Centre guide, Forslide, guide track open at the bottom			1	27531
	Hinge plate cranked, two pieces, stainless steel A4			4	27419

Set for uneven number of leafs

	No.
Hawa Frontfold 30 FS uo, set for uneven number of leafs left	30164
Hawa Frontfold 30 FS uo, set for uneven number of leafs right	30167

Set consisting of:

		30164	30167	No.
	Fixed suspension, Forslide, folding to the left	1		27518
	Fixed guide, Forslide, folding to the left, guide track open at the bottom	1		27527
	Hinge plate cranked, one-piece, stainless steel A4	2	2	27418
	Cylinder screw, M8x100 mm, A4-70	2	2	27401
	Hinge ring, plastic	1	1	15740
	Fixed suspension, Forslide, folding to the right		1	27517
	Fixed guide, Forslide, folding to the right, guide track open at the bottom		1	27528

Running tracks

		mm (inch)	No.
	Running track, Forslide, wall mounting, aluminum, anodized	6000 (19'8 7/32")	27358
		cut to size	27622
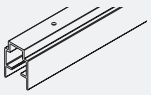	Running track, Forslide, ceiling mounting, aluminum, anodized	6000 (19'8 7/32")	27360
		cut to size	27623

Guide tracks

		mm (inch)	No.
	Guide track, wall mounting, aluminum, anodized	6000 (19'8 7/32")	27364
		cut to size	27625
	Guide track, floor mounting, aluminum, anodized	6000 (19'8 7/32")	27366
		cut to size	27626
	Guide track, narrow, aluminum, anodized	6000 (19'8 7/32")	27368
		cut to size	27627

Running track, mounted on ceiling

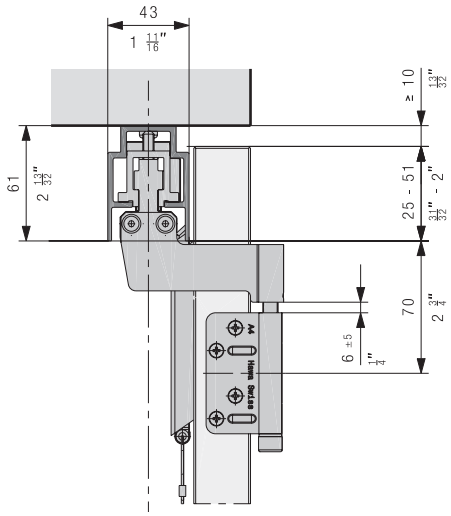

Accessories

		No.
	Tension latch, opening outwards, with steel cable, without fixing screws	27490
	Tension latch, opening inwards, with steel cable, without fixing screws	27491
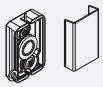	Rotary handle for tension latch, stainless steel	27458
	Flat hinge, gap size 1–6 mm, stainless steel A4	27421
	Cranked hinge, gap size 6 mm, stainless steel A4	27595
	Hinge plate cranked, two pieces, stainless steel A4	27419
	Hinge plate flat, two pieces, stainless steel A4	27420
	Hinge pin A4	20187
	Drilling jig for hinge, Ø 3mm for screw fixing, including threaded bolt	27551
	Drilling jig for hinge, Ø 5mm for riveting, including threaded bolt	27552
	Stop with adjusting screw, suitable for profile bar 8 mm from the espagnolette locking device	15899

Subject to technical modifications

Planning folding package

Customer installation of a wind support is recommended.

With an odd number of doors, the last door must be secured by the customer.

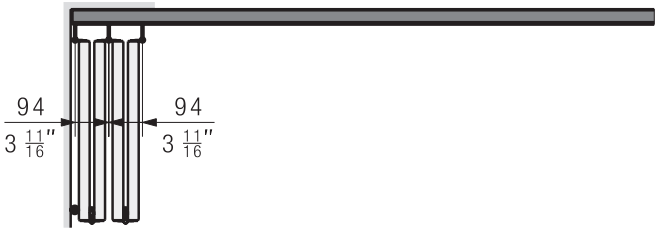

Running gear and guide hinge

With folding sliding shutters more than 33 mm thick, the hinges must be embedded.

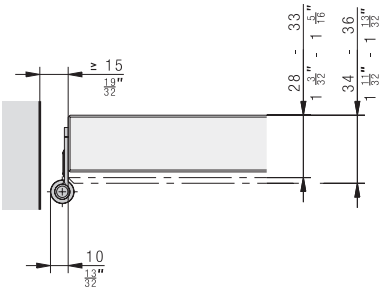

Options folding hinges

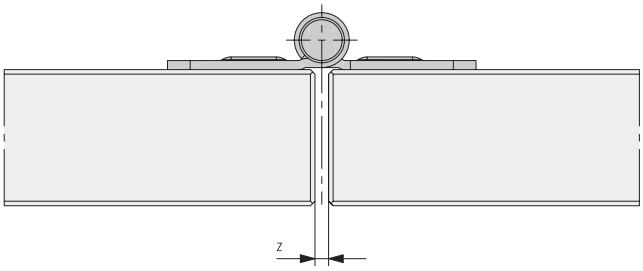

Variant 1, flat hinge: Z = 1–6 mm

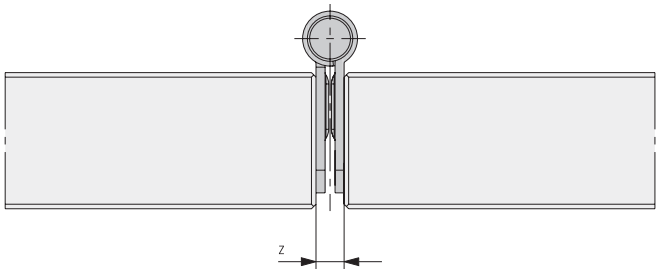

Variant 2, cranked hinge: Z = 6 mm

Gap sizes

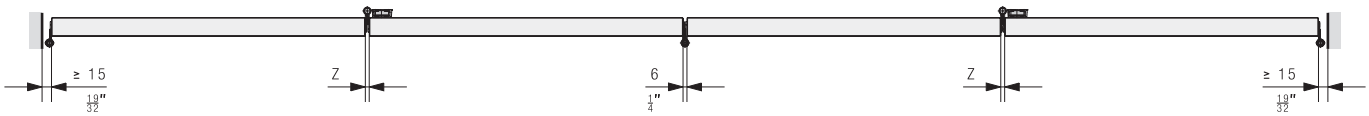

Number of hinges

Height	Quantity
up to 2000 mm	2
from 2001 mm	3

Ordering information
- Type and number of sets
- Type and number of hinges
- Type and number of tension latches and rotary handles
- Type and number of running tracks
- Type and number of guide tracks

Optional ordering information
- Type and number of drilling jigs
- Order overview page 32–33

Planning/execution
Installation instructions No. 27510 have to be used for planning and execution. Further information about the product can be found on www.hawa.com.

Fitting for 2–10 folding sliding shutters made of wood or metal up to 30 kg per shutter and 180 kg per system, with concealed running and guide tracks. Design Forslide, open at the top.

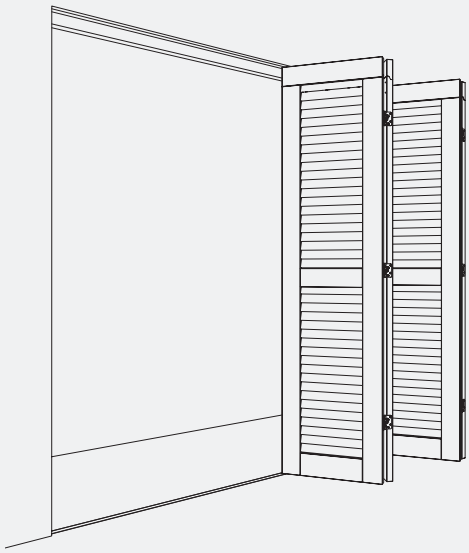

Product highlights

Aesthetics Harmonious combination of shutters and façade, since the running and guide tracks disappear behind the closed shutter

Flexibility Solution for any construction situation with doors of up to 1.2 m² and 30 kg, even/odd number of doors and system width of up to 12 m

Technical specifications

Max.	30 kg (66 lbs.)
Max.	3200 mm (10'5 31/32")
Max.	600 mm (1'11 5/8")
	28–36 mm (1 3/32"–1 13/32")

Installation examples

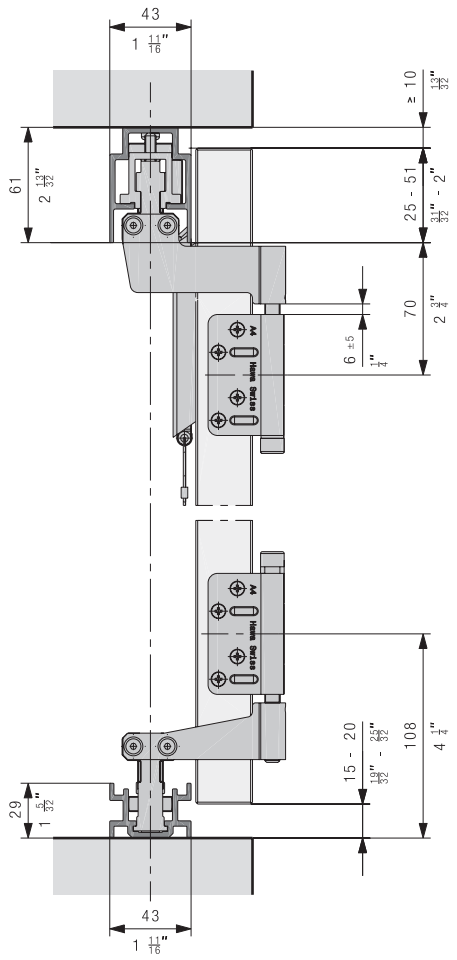

Subject to technical modifications

Set for foldhing packages

		No.
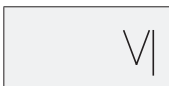	Hawa Frontfold 30 FS, basic set right, guide track open at the top	27558
	Hawa Frontfold 30 FS, basic set left, guide track open at the top	27559
	Hawa Frontfold 30 FS, additional set, guide track open at the top	27560

Set consisting of:

		27558	27559	27560	No.
	Fixed suspension, Forslide, folding to the right	1			27517
	Running gear outside, Forslide, folding to the right	1			27519
	Fixed guide, Forslide, folding to the right, guide track open at the top	1			27533
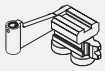	Outside guide, Forslide, folding to the right, guide track open at the top	1			27534
	Cylinder screw, M8x100 mm, A4-70	4	4	2	27401
	Hinge ring, plastic	2	2	1	15740
	Hinge plate cranked, one-piece, stainless steel A4	4	4		27418
	Fixed suspension, Forslide, folding to the left		1		27518
	Running gear outside, Forslide, folding to the left		1		27520
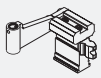	Fixed guide, Forslide, folding to the left, guide track open at the top		1		27532
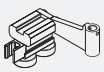	Outside guide, Forslide, folding to the left, guide track open at the top		1		27535
	Centre running gear, Forslide			1	27521
	Centre guide, Forslide, guide track open at the top			1	27537
	Hinge plate cranked, two pieces, stainless steel A4			4	27419

Set for uneven number of leafs

	No.
Hawa Frontfold 30 FS oo, set for uneven number of leafs left	30168
Hawa Frontfold 30 FS oo, set for uneven number of leafs right	30169

Set consisting of:

		30168	30169	No.
	Fixed suspension, Forslide, folding to the left	1		27518
	Fixed guide, Forslide, folding to the left, guide track open at the top	1		27532
	Hinge plate cranked, one-piece, stainless steel A4	2	2	27418
	Cylinder screw, M8x100 mm, A4-70	2	2	27401
	Hinge ring, plastic	1	1	15740
	Fixed suspension, Forslide, folding to the right		1	27517
	Fixed guide, Forslide, folding to the right, guide track open at the top		1	27533

Running tracks

		mm (inch)	No.
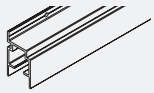	Running track, Forslide, wall mounting, aluminum, anodized	6000 (19'8 7/32'')	27358
		cut to size	27622
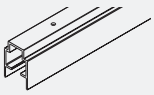	Running track, Forslide, ceiling mounting, aluminum, anodized	6000 (19'8 7/32'')	27360
		cut to size	27623

Guide tracks

		mm (inch)	No.
	Guide track, wall mounting, aluminum, anodized	6000 (19'8 7/32'')	27364
		cut to size	27625
	Guide track, floor mounting, aluminum, anodized	6000 (19'8 7/32'')	27366
		cut to size	27626
	Guide track, narrow, aluminum, anodized	6000 (19'8 7/32'')	27368
		cut to size	27627

Accessories

		No.
	Tension latch, opening outwards, with steel cable, without fixing screws	27490
	Tension latch, opening inwards, with steel cable, without fixing screws	27491
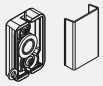	Rotary handle for tension latch, stainless steel	27458
	Flat hinge, gap size 1–6 mm, stainless steel A4	27421
	Cranked hinge, gap size 6 mm, stainless steel A4	27595
	Hinge plate cranked, two pieces, stainless steel A4	27419
	Hinge plate flat, two pieces, stainless steel A4	27420
	Hinge pin A4	20187
	Drilling jig for hinge, Ø 3mm for screw fixing, including threaded bolt	27551
	Drilling jig for hinge, Ø 5mm for riveting, including threaded bolt	27552
	Stop with adjusting screw, suitable for profile bar 8 mm from the espagnolette locking device	15899

Subject to technical modifications

Running track wall installation

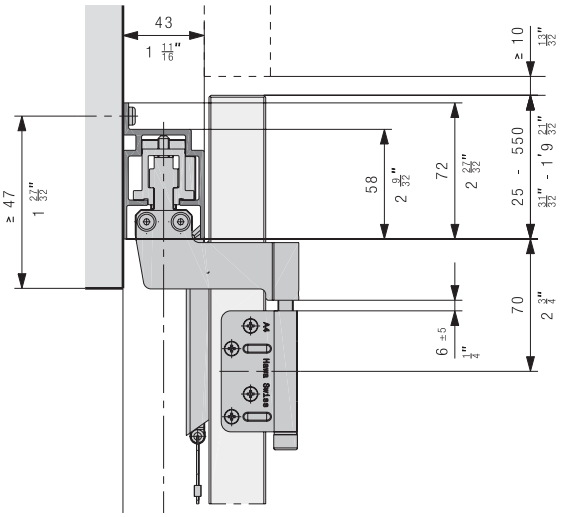

Guide track wall installation

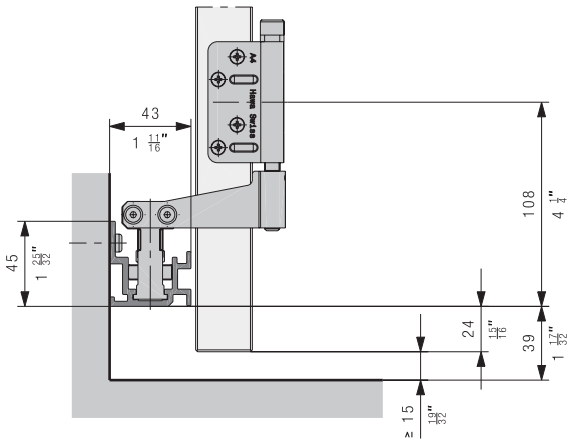

Guide track embedded in the floor

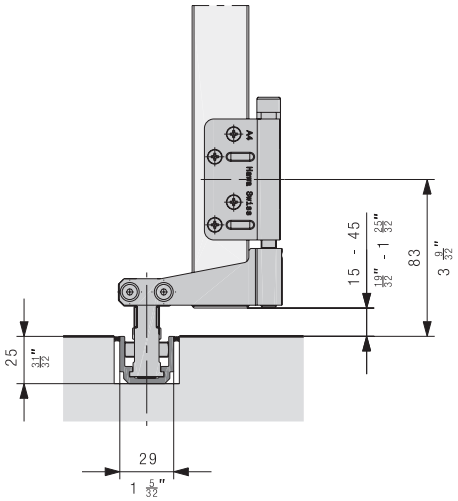

Planning folding package

Customer installation of a wind support is recommended.

With an odd number of doors, the last door must be secured by the customer.

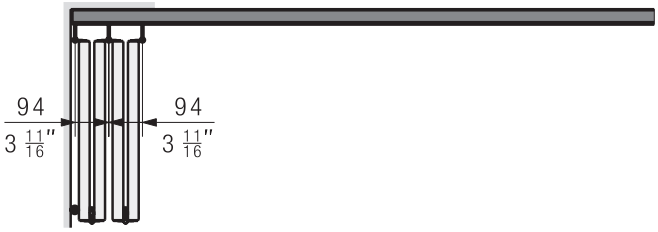

Running gear and guide hinge

With folding sliding shutters more than 33 mm thick, the hinges must be embedded.

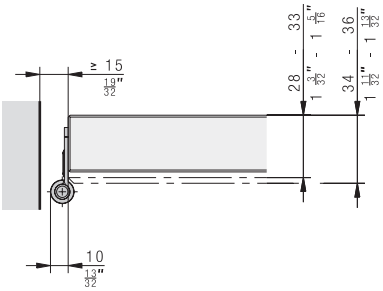

Options folding hinges

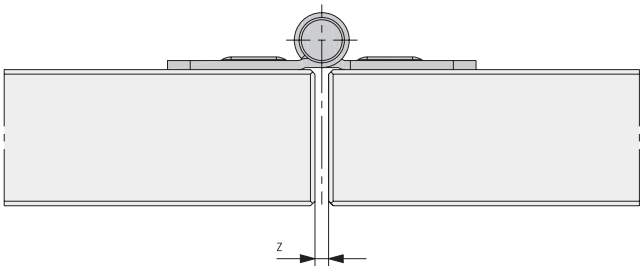

Variant 1, flat hinge: Z = 1–6 mm

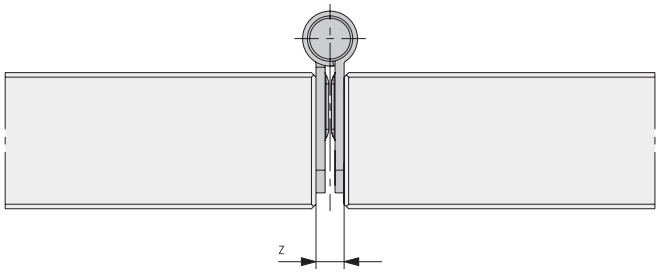

Variant 2, cranked hinge: Z = 6 mm

Gap sizes

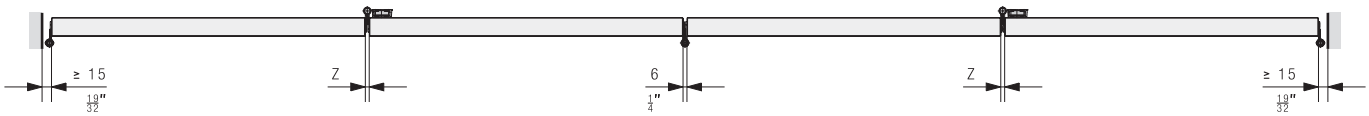

Number of hinges

Height	Quantity
up to 2000 mm	2
from 2001 mm	3

Ordering information
- Type and number of sets
- Type and number of hinges
- Type and number of tension latches and rotary handles
- Type and number of running tracks
- Type and number of guide tracks

Optional ordering information
- Type and number of drilling jigs
- Order overview page 32–33

Planning/execution
Installation instructions No. 27510 have to be used for planning and execution. Further information about the product can be found on www.hawa.com.

Subject to technical modifications

Fitting for 2–10 folding sliding shutters made of wood or metal up to 30 kg per shutter and 180 kg per system, with visible running track and concealed guide track. Design Mixslide, open at the bottom.

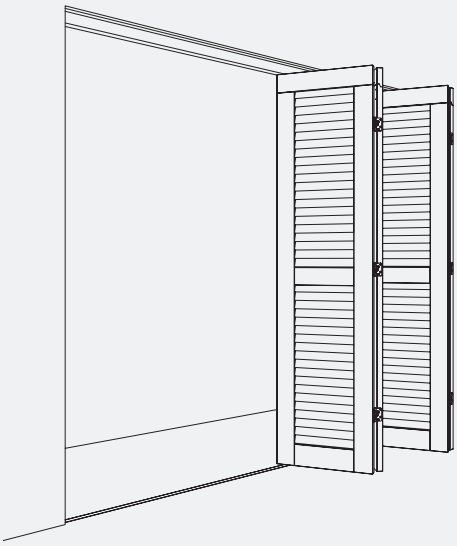

Product highlights

Flexibility Solution for any construction situation with doors of up to 1.2 m² and 30 kg, even/odd number of doors and system width of up to 12 m

Security Corrosion-resistant materials for use in coastal areas without reservations

Technical specifications

Max.	30 kg (66 lbs.)
Max.	3200 mm (10'5 31/32")
Max.	600 mm (1'11 5/8")
	28–36 mm (1 3/32"–1 13/32")

Installation examples

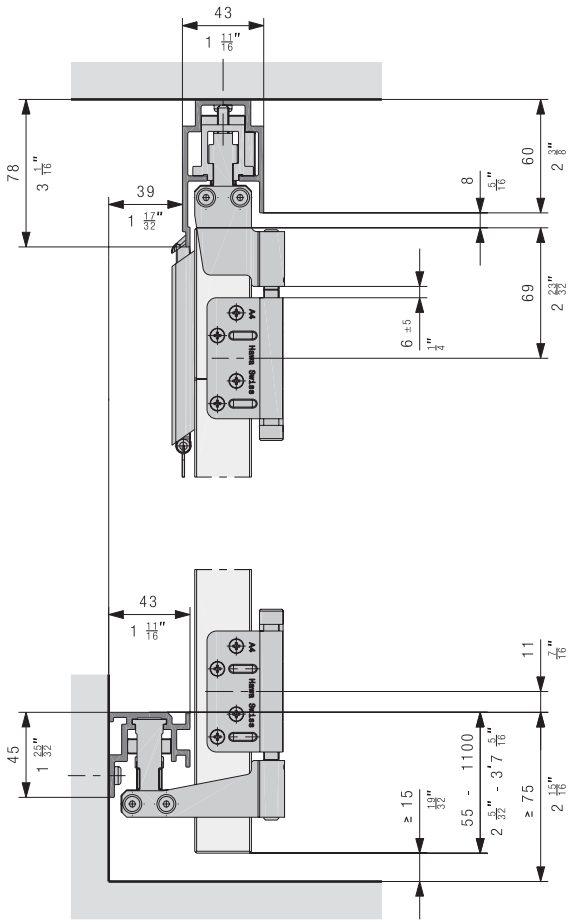

Set for folding packages

		No.
	Hawa Frontfold 30 MS, basic set, right, guide track open at the bottom	27561
	Hawa Frontfold 30 MS, basic set, left, guide track open at the bottom	27562
	Hawa Frontfold 30 MS, additional set, guide track open at the bottom	27563

Set consisting of:

		27561	27562	27563	No.
	Fixed suspension, Inslide, folding to the right	1			27523
	Running gear outside, Inslide, folding to the right	1			27524
	Fixed guide, Forslide, folding to the right, guide track open at the bottom	1			27528
	Outside guide, Forslide, folding to the right, guide track open at the bottom	1			27529
	Cylinder screw, M8x100 mm, A4-70	4	4	2	27401
	Hinge ring, plastic	2	2	1	15740
	Hinge plate cranked, one-piece, stainless steel A4	4	4		27418
	Fixed suspension, Inslide, folding to the left		1		27522
	Running gear outside, Inslide, folding to the left		1		27525
	Fixed guide, Forslide, folding to the left, guide track open at the bottom		1		27527
	Outside guide, Forslide, folding to the left, guide track open at the bottom		1		27530
	Centre running gear, Inslide			1	27526
	Centre guide, Forslide, guide track open at the bottom			1	27531
	Hinge plate cranked, two pieces, stainless steel A4			4	27419

Set for uneven number of leafs

	No.
Hawa Frontfold 30 MS uo, set for uneven number of leafs left	30170
Hawa Frontfold 30 MS uo, set for uneven number of leafs right	30171

Set consisting of:

		30170	30171	No.
	Fixed suspension, Inslide, folding to the left	1		27522
	Fixed guide, Forslide, folding to the left, guide track open at the bottom	1		27527
	Hinge plate cranked, one-piece, stainless steel A4	2	2	27418
	Cylinder screw, M8x100 mm, A4-70	2	2	27401
	Hinge ring, plastic	1	1	15740
	Fixed suspension, Inslide, folding to the right		1	27523
	Fixed guide, Forslide, folding to the right, guide track open at the bottom		1	27528

Running tracks

		mm (inch)	No.
	Running track, Inslide, aluminum, anodized	6000 (19'8 7/32'')	27362
		cut to size	27624

Guide tracks

		mm (inch)	No.
	Guide track, wall mounting, aluminum, anodized	6000 (19'8 7/32'')	27364
		cut to size	27625
	Guide track, floor mounting, aluminum, anodized	6000 (19'8 7/32'')	27366
		cut to size	27626
	Guide track, narrow, aluminum, anodized	cut to size	27627

Accessories

		No.
	Tension latch, opening outwards, with steel cable, without fixing screws	27490
	Tension latch, opening inwards, with steel cable, without fixing screws	27491
	Rotary handle for tension latch, stainless steel	27458
	Flat hinge, gap size 1–6 mm, stainless steel A4	27421
	Cranked hinge, gap size 6 mm, stainless steel A4	27595
	Hinge plate cranked, two pieces, stainless steel A4	27419
	Hinge plate flat, two pieces, stainless steel A4	27420
	Hinge pin A4	20187
	Drilling jig for hinge, Ø 3mm for screw fixing, including threaded bolt	27551
	Drilling jig for hinge, Ø 5mm for riveting, including threaded bolt	27552
	Stop with adjusting screw, suitable for profile bar 8 mm from the espagnolette locking device	15899

Running track folding inwards

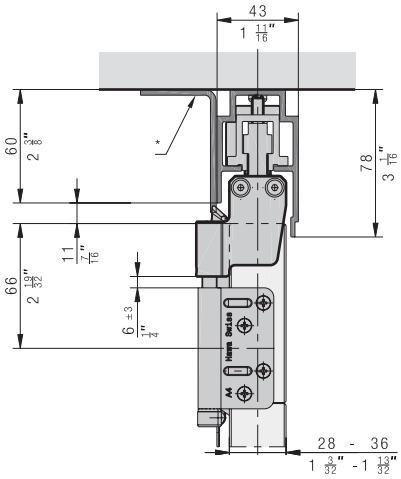

* to be provided by customer

Planning folding package

Customer installation of a wind support is recommended.

With an odd number of doors, the last door must be secured by the customer.

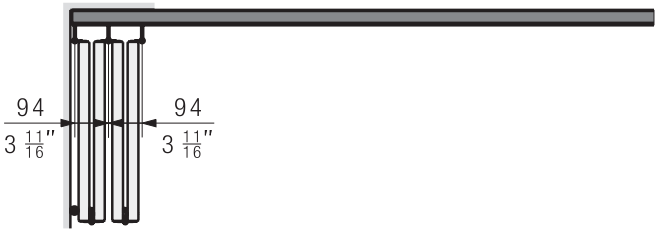

Running gear and guide hinge

With folding sliding shutters more than 33 mm thick, the hinges must be embedded.

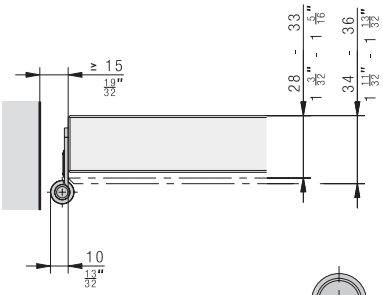

Options folding hinges

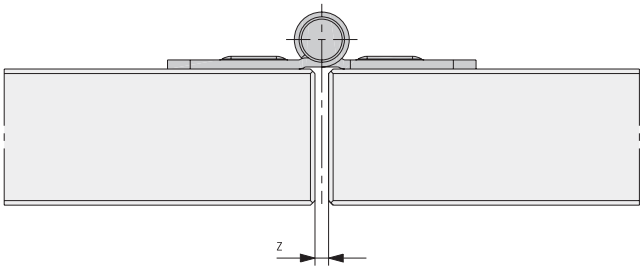

Variant 1, flat hinge: Z = 1–6 mm

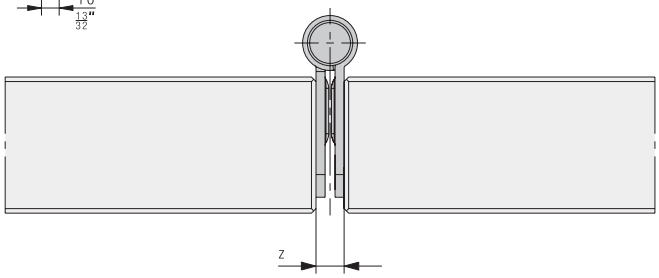

Variant 2, cranked hinge: Z = 6 mm

Gap sizes

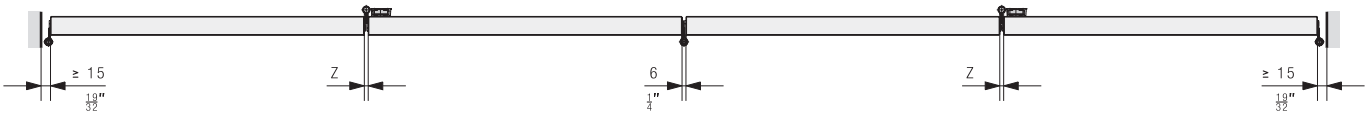

Number of hinges

Height	Quantity
up to 2000 mm	2
from 2001 mm	3

Ordering information
- Type and number of sets
- Type and number of hinges
- Type and number of tension latches and rotary handles
- Type and number of running tracks
- Type and number of guide tracks

Optional ordering information
- Type and number of drilling jigs
- Order overview page 32–33

Planning/execution
Installation instructions No. 27546 have to be used for planning and execution. Further information about the product can be found on www.hawa.com.

Fitting for 2–10 folding sliding shutters made of wood or metal up to 30 kg per shutter and 180 kg per system, with visible running track and concealed guide track. Design Mixslide, open at the top.

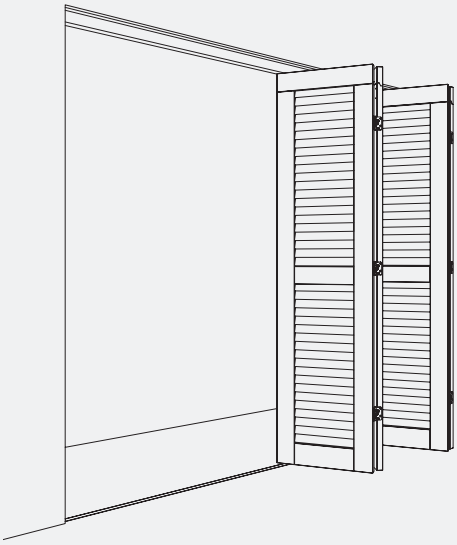

Product highlights

Flexibility Solution for any construction situation with doors of up to 1.2 m² and 30 kg, even/odd number of doors and system width of up to 12 m

Security Corrosion-resistant materials for use in coastal areas without reservations

Technical specifications

Max.	30 kg (66 lbs.)
Max.	3200 mm (10'5 31/32")
Max.	600 mm (1'11 5/8")
	28–36 mm (1 3/32"–1 13/32")

Installation examples

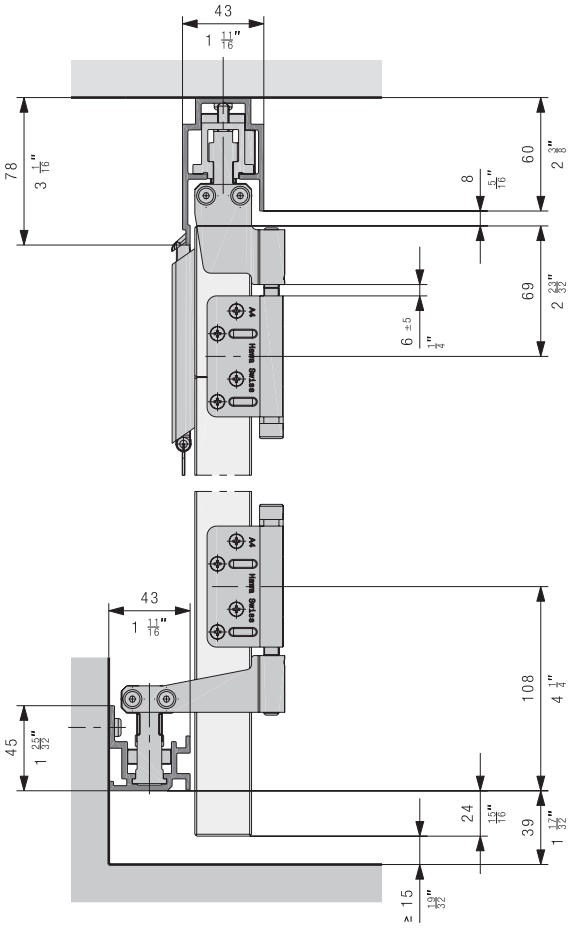

Set for folding packages

		No.
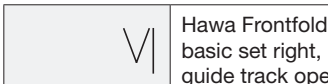	Hawa Frontfold 30 MS, basic set right, guide track open at the top	27564
	Hawa Frontfold 30 MS, basic set left, guide track open at the top	27565
	Hawa Frontfold 30 MS, additional set, guide track open at the top	27566

Set consisting of:

		27564	27565	27566	No.
	Fixed suspension, Inslide, folding to the right	1			27523
	Running gear outside, Inslide, folding to the right	1			27524
	Fixed guide, Forslide, folding to the right, guide track open at the top	1			27533
	Outside guide, Forslide, folding to the right, guide track open at the top	1			27534
	Cylinder screw, M8x100 mm, A4-70	4	4	2	27401
	Hinge ring, plastic	2	2	1	15740
	Hinge plate cranked, one-piece, stainless steel A4	4	4		27418
	Fixed suspension, Inslide, folding to the left		1		27522
	Running gear outside, Inslide, folding to the left		1		27525
	Fixed guide, Forslide, folding to the left, guide track open at the top		1		27532
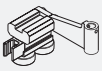	Outside guide, Forslide, folding to the left, guide track open at the top		1		27535
	Centre running gear, Inslide			1	27526
	Centre guide, Forslide, guide track open at the top			1	27537
	Hinge plate cranked, two pieces, stainless steel A4			4	27419

Set for uneven number of leafs

	No.
Hawa Frontfold 30 MS oo, set for uneven number of leafs left	30172
Hawa Frontfold 30 MS oo, set for uneven number of leafs right	30174

Set consisting of:

		30172	30174	No.
	Fixed suspension, Inslide, folding to the left	1		27522
	Fixed guide, Forslide, folding to the left, guide track open at the top	1		27532
	Hinge plate cranked, one-piece, stainless steel A4	2	2	27418
	Cylinder screw, M8x100 mm, A4-70	2	2	27401
	Hinge ring, plastic	1	1	15740
	Fixed suspension, Inslide, folding to the right		1	27523
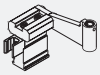	Fixed guide, Forslide, folding to the right, guide track open at the top		1	27533

Subject to technical modifications

Running tracks

		mm (inch)	No.
	Running track, Inslide, aluminum, anodized	6000 (19'8 7/32'')	27362
		cut to size	27624

Guide tracks

		mm (inch)	No.
	Guide track, wall mounting, aluminum, anodized	6000 (19'8 7/32'')	27364
		cut to size	27625
	Guide track, floor mounting, aluminum, anodized	6000 (19'8 7/32'')	27366
		cut to size	27626
	Guide track, narrow, aluminum, anodized	6000 (19'8 7/32'')	27368
		cut to size	27627

Accessories

		No.
	Tension latch, opening outwards, with steel cable, without fixing screws	27490
	Tension latch, opening inwards, with steel cable, without fixing screws	27491
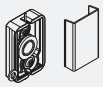	Rotary handle for tension latch, stainless steel	27458
	Flat hinge, gap size 1–6 mm, stainless steel A4	27421
	Cranked hinge, gap size 6 mm, stainless steel A4	27595
	Hinge plate cranked, two pieces, stainless steel A4	27419
	Hinge plate flat, two pieces, stainless steel A4	27420
	Hinge pin A4	20187
	Drilling jig for hinge, Ø 3mm for screw fixing, including threaded bolt	27551
	Drilling template for hinge, Ø 5mm for riveting, including threaded bolt	27552
	Stop with adjusting screw, suitable for profile bar 8 mm from the espagnolette locking device	15899

Guide track, floor mounting

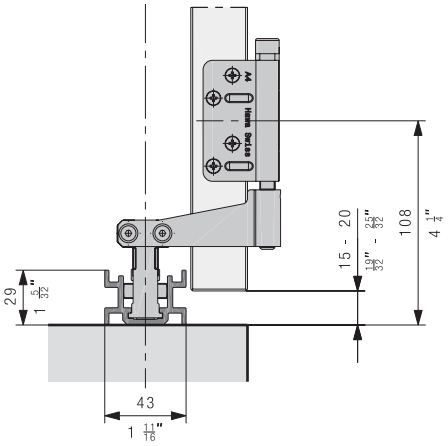

Running track folding inwards

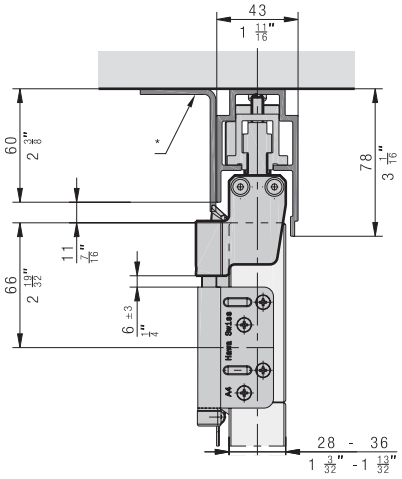

* to be provided by customer

Guide track embedded in the floor

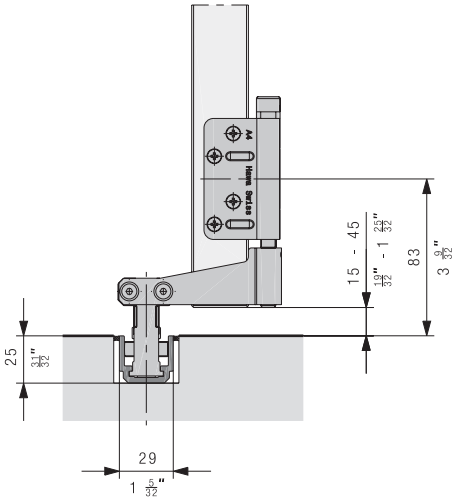

Planning folding package

Customer installation of a wind support is recommended.

With an odd number of doors, the last door must be secured by the customer.

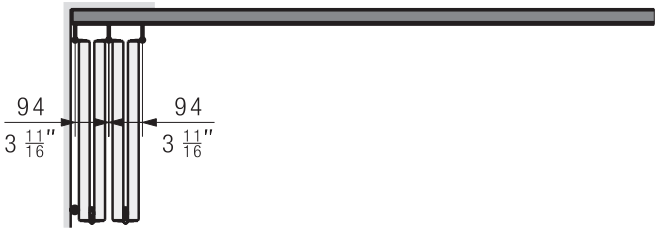

Running gear and guide hinge

With folding sliding shutters more than 33 mm thick, the hinges must be embedded.

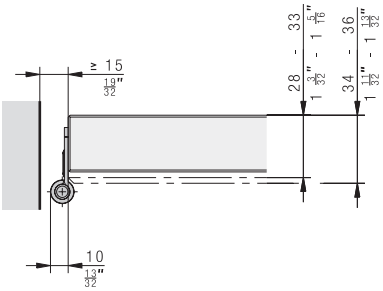

Options folding hinges

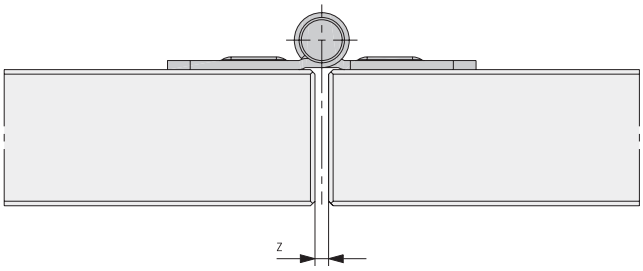

Variant 1, flat hinge: Z = 1–6 mm

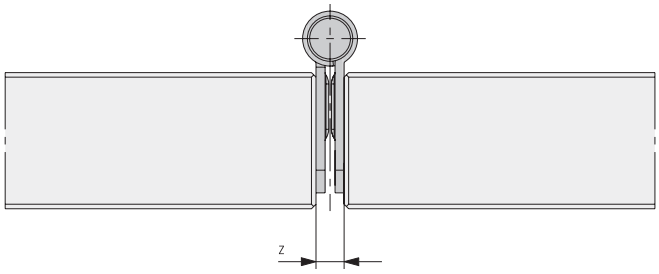

Variant 2, cranked hinge: Z = 6 mm

Gap sizes

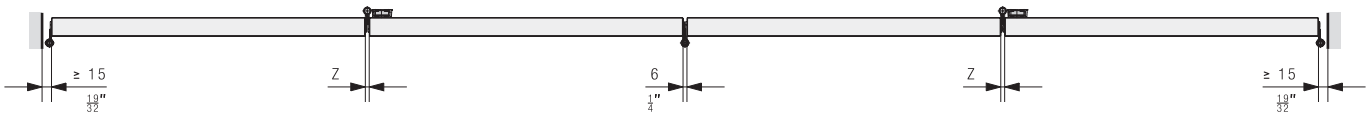

Number of hinges

Height	Quantity
up to 2000 mm	2
from 2001 mm	3

Ordering information
- Type and number of sets
- Type and number of hinges
- Type and number of tension latches and rotary handles
- Type and number of running tracks
- Type and number of guide tracks

Optional ordering information
- Type and number of drilling jigs
- Order overview page 32–33

Planning/execution
Installation instructions No. 27546 have to be used for planning and execution. Further information about the product can be found on www.hawa.com.

Fitting for 2–10 folding sliding shutters made of wood or metal up to 30 kg per shutter and 180 kg per system. Inside running for tight spaces. Design Inslide.

Product highlights

Flexibility Solution for any construction situation with doors of up to 1.2 m² and 30 kg, even/odd number of doors and system width of up to 12 m

Flexibility Tension latches available for inwards-folding systems

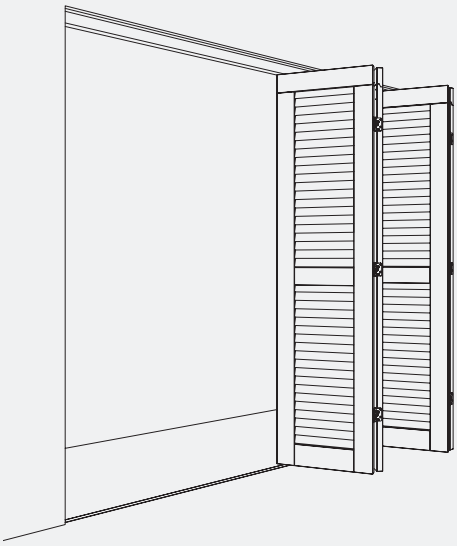

Technical specifications

	Max.	30 kg (66 lbs.)
	Max.	3200 mm (10'5 31/32")
	Max.	600 mm (1'11 5/8")
		28–36 mm (1 3/32"–1 13/32")

Installation examples

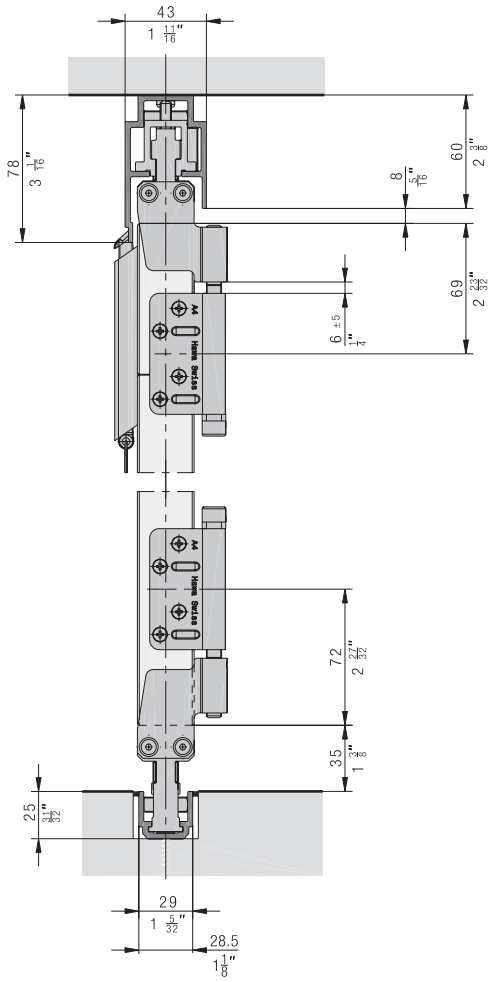

Subject to technical modifications

Set for folding packages

		No.
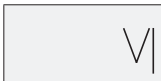	Hawa Frontfold 30 IS, basic set right	27567
	Hawa Frontfold 30 IS, basic set left	27568
	Hawa Frontfold 30 IS, additional set	27569

Set consisting of:

		27567	27568	27569	No.
	Fixed suspension, Inslide, folding to the right	1			27523
	Running gear outside, Inslide, folding to the right	1			27524
	Fixed guide, Inslide, folding to the right	1			27539
	Outside guide, Inslide, folding to the right	1			27540
	Cylinder screw, M8x100 mm, A4-70	4	4	2	27401
	Hinge ring, plastic	2	2	1	15740
	Hinge plate cranked, one-piece, stainless steel A4	4	4		27418
	Fixed suspension, Inslide, folding to the left		1		27522
	Running gear outside, Inslide, folding to the left		1		27525
	Fixed guide, Inslide, folding to the left		1		27538
	Outside guide, Inslide, folding to the left		1		27541
	Centre running gear, Inslide			1	27526
	Centre guide, Inslide			1	27542
	Hinge plate cranked, two pieces, stainless steel A4			4	27419

Set for uneven number of leafs

	No.
Hawa Frontfold 30 IS, set for uneven number of leafs left	30175
Hawa Frontfold 30 IS, set for uneven number of leafs right	30176

Set consisting of:

		30175	30176	No.
	Fixed suspension, Inslide, folding to the left	1		27522
	Fixed guide, Inslide, folding to the left	1		27538
	Hinge plate cranked, one-piece, stainless steel A4	2	2	27418
	Cylinder screw, M8x100 mm, A4-70	2	2	27401
	Hinge ring, plastic	1	1	15740
	Fixed suspension, Inslide, folding to the right		1	27523
	Fixed guide, Inslide, folding to the right		1	27539

Running tracks

		mm (inch)	No.
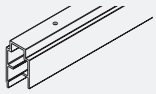	Running track, Inslide, aluminum, anodized	6000 (19'8 7/32'')	27362
		cut to size	27624

Guide tracks

		mm (inch)	No.
	Guide track, narrow, aluminum, anodized	6000 (19'8 7/32'')	27368
		cut to size	27627

Accessories

		No.
	Tension latch, opening outwards, with steel cable, without fixing screws	27490
	Tension latch, opening inwards, with steel cable, without fixing screws	27491
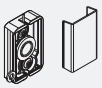	Rotary handle for tension latch, stainless steel	27458
	Flat hinge, gap size 1–6 mm, stainless steel A4	27421
	Cranked hinge, gap size 6 mm, stainless steel A4	27595
	Hinge plate cranked, two pieces, stainless steel A4	27419
	Hinge plate flat, two pieces, stainless steel A4	27420
	Hinge pin A4	20187
	Drilling jig for hinge, Ø 3mm for screw fixing, including threaded bolt	27551
	Drilling jig for hinge, Ø 5mm for riveting, including threaded bolt	27552
	Stop with adjusting screw, suitable for profile bar 8 mm from the espagnolette locking device	15899

Subject to technical modifications

Running track folding inwards

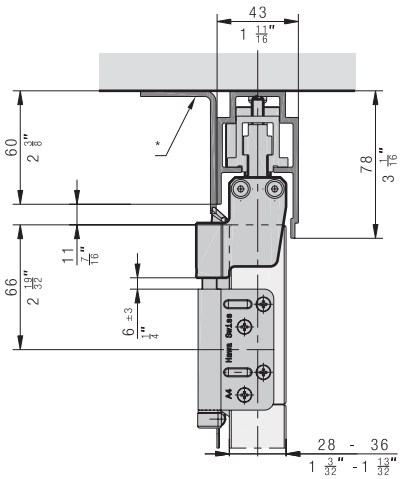

* to be provided by customer

Planning folding package

Customer installation of a wind support is recommended.

With an odd number of doors, the last door must be secured by the customer.

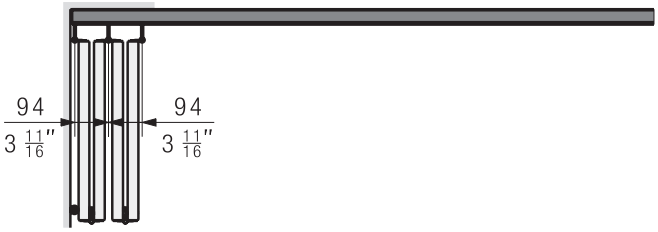

Running gear and guide hinge

With folding sliding shutters more than 33 mm thick, the hinges must be embedded.

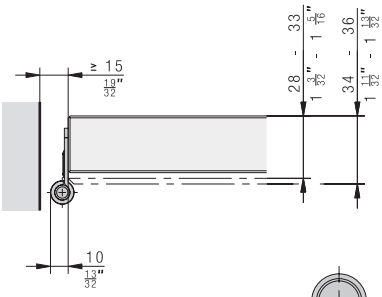

Options folding hinges

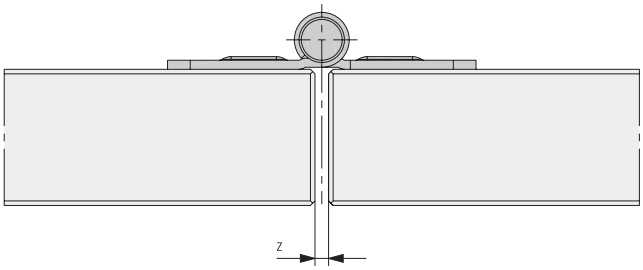

Variant 1, flat hinge: Z = 1–6 mm

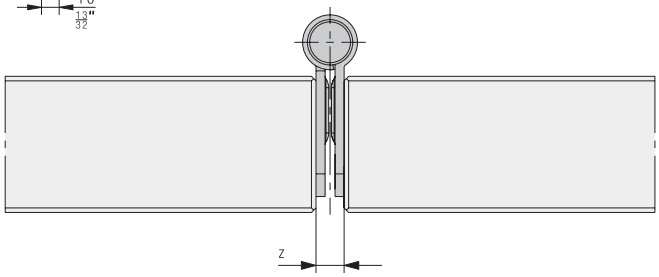

Variant 2, cranked hinge: Z = 6 mm

Gap sizes

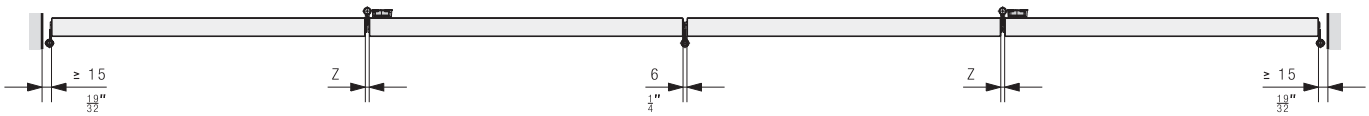

Number of hinges

Height	Quantity
up to 2000 mm	2
from 2001 mm	3

Ordering information
- Type and number of sets
- Type and number of hinges
- Type and number of tension latches and rotary handles
- Type and number of running tracks
- Type and number of guide tracks

Optional ordering information
- Type and number of drilling jigs
- Order overview page 32–33

Planning/execution
Installation instructions No. 27546 have to be used for planning and execution. Further information about the product can be found on www.hawa.com.

Hawa Frontfold 30
Order overview

Number of leaves		2*		3*		4		5	
left	right								
Max. weight per leaf		**Up to 30 kg (66 lbs.)**		**Up to 30 kg (66 lbs.)**		**Up to 30 kg (66 lbs.)**		**Up to 30 kg (66 lbs.)**	
FS guide open at the bottom (Page 10)		1× 27556	1× 27555	1× 30164 1× 27557	1× 30167 1× 27557	1× 27556 1× 27557	1× 27555 1× 27557	1× 30164 2× 27557	1× 30167 2× 27557
FS guide open at the top (Page 14)		1× 27559	1× 27558	1× 30168 1× 27560	1× 30169 1× 27560	1× 27559 1× 27560	1× 27558 1× 27560	1× 30168 2× 27560	1× 30169 2× 27560
MS guide open at the bottom (Page 19)		1× 27562	1× 27561	1× 30170 1× 27563	1× 30171 1× 27563	1× 27562 1× 27563	1× 27561 1× 27563	1× 30170 2× 27563	1× 30171 2× 27563
MS guide open at the top (Page 23)		1× 27565	1× 27564	1× 30172 1× 27566	1× 30174 1× 27566	1× 27565 1× 27566	1× 27564 1× 27566	1× 30172 2× 27566	1× 30174 2× 27566
Inslide (Page 28)		1× 27568	1× 27567	1× 30175 1× 27569	1× 30176 1× 27569	1× 27568 1× 27569	1× 27567 1× 27569	1× 30175 2× 27569	1× 30176 2× 27569

Running and guide track according to the construction situation on the corresponding sidest

Accessories									
Rotary handle		1× 27458	1× 27458	2× 27458	2× 27458	2× 27458	2× 27458	3× 27458	3× 27458
Tension latch folding outwards **		1× 27490	1× 27490	2× 27490	2× 27490	2× 27490	2× 27490	3× 27490	3× 27490
Tension latch folding inwards **		1× 27491	1× 27491	2× 27491	2× 27491	2× 27491	2× 27491	3× 27491	3× 27491
Hinges flat	LH < 2m	2× 27421	2× 27421	2× 27421	2× 27421	4× 27421	4× 27421	4× 27421	4× 27421
	LH > 2m	3× 27421	3× 27421	3× 27421 1× 27595	3× 27421 1× 27595	6× 27421 1× 27595	6× 27421 1× 27595	6× 27421 2× 27595	6× 27421 2× 27595
Hinges cranked	LH < 2m	2× 27595	2× 27595	2× 27595	2× 27595	4× 27595	4× 27595	4× 27595	4× 27595
	LH > 2m	3× 27595	3× 27595	4× 27595	4× 27595	7× 27595	7× 27595	8× 27595	8× 27595

* For less than 4 leaves, an overturn protection must be installed on site.
** For shutter size > 1m² double the number of tension latches is necessary to achieve wind resistance class 6

Subject to technical modifications

6		7		8		9		10	
Up to 30 kg (66 lbs.)		**Up to 25 kg (55 lbs.)**		**Up to 22.5 kg (50 lbs.)**		**Up to 20 kg (44 lbs.)**		**Up to 18 kg (40 lbs.)**	
1× 27556 2× 27557	1× 27555 2× 27557	1× 30164 3× 27557	1× 30167 3× 27557	1× 27556 3× 27557	1× 27555 3× 27557	1× 30164 4× 27557	1× 30167 4× 27557	1× 27556 4× 27557	1× 27555 4× 27557
1× 27559 2× 27560	1× 27558 2× 27560	1× 30168 3× 27560	1× 30169 3× 27560	1× 27559 3× 27560	1× 27558 3× 27560	1× 30168 4× 27560	1× 30169 4× 27560	1× 27559 4× 27560	1× 27558 4× 27560
1× 27562 2× 27563	1× 27561 2× 27563	1× 30170 3× 27563	1× 30171 3× 27563	1× 27562 3× 27563	1× 27561 3× 27563	1× 30170 4× 27563	1× 30171 4× 27563	1× 27562 4× 27563	1× 27561 4× 27563
1× 27565 2× 27566	1× 27564 2× 27566	1× 30172 3× 27566	1× 30174 3× 27566	1× 27565 3× 27566	1× 27564 3× 27566	1× 30172 4× 27566	1× 30174 4× 27566	1× 27565 4× 27566	1× 27564 4× 27566
1× 27568 2× 27569	1× 27567 2× 27569	1× 30175 3× 27569	1× 30176 3× 27569	1× 27568 3× 27569	1× 27567 3× 27569	1× 30175 4× 27569	1× 30176 4× 27569	1× 27568 4× 27569	1× 27567 4× 27569

Running and guide track according to the construction situation on the corresponding sides

3× 27458	3× 27458	4× 27458	4× 27458	4× 27458	4× 27458	5× 27458	5× 27458	5× 27458	5× 27458
3× 27490	3× 27490	4× 27490	4× 27490	4× 27490	4× 27490	5× 27490	5× 27490	5× 27490	5× 27490
3× 27491	3× 27491	4× 27491	4× 27491	4× 27491	4× 27491	5× 27491	5× 27491	5× 27491	5× 27491
6× 27421	6× 27421	6× 27421	6× 27421	8× 27421	8× 27421	8× 27421	8× 27421	10× 27421	10× 27421
9× 27421 2× 27595	9× 27421 2× 27595	9× 27421 3× 27595	9× 27421 3× 27595	12× 27421 3× 27595	12× 27421 3× 27595	12× 27421 4× 27595	12× 27421 4× 27595	15× 27421 4× 27595	15× 27421 4× 27595
6× 27595	6× 27595	6× 27595	6× 27595	8× 27595	8× 27595	8× 27595	8× 27595	10× 27595	10× 27595
11× 27595	11× 27595	12× 27595	12× 27595	15× 27595	15× 27595	16× 27595	16× 27595	19× 27595	19× 27595

The right sliding solution on buildings for every need and every idea

On buildings	Technical specifications							Design/installation					Exterior application	
Sliding shutters														
Hawa Frontslide	60/100/140	28–60	3200	min. 400				X	X	X	X		X	
Hawa Frontslide 60 A	60	min. 28	3200	min. 400	9.6	12 000	9.6		X				X	
Hawa Frontslide 60 A	60	28–45	3200	min. 400	9.6	12 000	9.6		X				X	
Hawa Frontslide 60 A Symmetric 2	60	28–45	3200	min. 500	3.84	6000	7.4		X				X	
Hawa Frontslide 60 A Symmetric 2+2	40	28–40	3200	550–1000	3.2	6000	12.8	X		X	X		X	
Hawa Frontslide 60 A Telescopic 2	60	28–40	3200	550–1200	3.84	3500	7.4	X		X	X		X	
Hawa Frontslide 60 A Telescopic 3	60	28–40	3200	550–1200	3.84	4650	11	X		X	X		X	
Hawa Frontslide 60 A Telescopic 4	60	28–40	3200	550–1200	3.84	5800	14.7	X		X	X		X	
Hawa Frontslide 60 B	60	28–40	3200	min. 400	9.6	12 000	9.6		X				X	
Hawa Frontslide 100 A low running track	100	min. 28	3200	min. 500	9.6	12 000	9.6		X				X	
Hawa Frontslide 100 A	100	28–50	3200	min. 500	9.6	12 000	9.6		X				X	
Hawa Frontslide 100 A Symmetric 2	100	28–50	3200	min. 550	3.84	6000	7.4		X				X	
Hawa Frontslide 100 A Symmetric 2+2	70	28–40	3200	600–1000	3.2	6000	12.8	X		X	X		X	
Hawa Frontslide 100 A Telescopic 2	100	28–40	3200	600–1200	3.84	3500	7.4	X		X	X		X	
Hawa Frontslide 100 A Telescopic 3	100	28–40	3200	600–1200	3.84	4650	11	X		X	X		X	
Hawa Frontslide 100 A Telescopic 4	100	28–40	3200	600–1200	3.84	5800	14.7	X		X	X		X	
Hawa Frontslide 140 A	140	28–60	3200	min. 700	9.6	12 000	9.6		X				X	
Hawa Frontslide 140 A Symmetric 2	140	28–60	3200	min. 700	3.84	6000	7.4		X				X	
Hawa Frontslide 140 A Telescopic 2	140	28–40	3200	700–1200	3.84	6000	7.4	X		X	X		X	

On buildings

	Technical specifications							Design/installation					Exterior application	
Sliding shutters														
Hawa Frontslide Matic	60/100/140	45/50/60	3200		6.24	7500	14.7	X	X	X	X		X	
Hawa Frontslide 60 Matic	60	28–45	3200	min. 600	6.24	7500	6.24		X				X	
Hawa Frontslide 60 Matic Symmetric 2	60	28–45	3200	min. 550	6.24	7500	12		X				X	
Hawa Frontslide 60 Matic Symmetric 2+2	40	28–40	3200	650–1200	3.84	7000	14.7	X		X	X		X	
Hawa Frontslide 60 Matic Telescopic 2	60	28–40	3200	650–1200	3.84	3500	7.4	X		X	X		X	
Hawa Frontslide 60 Matic Telescopic 3	50	28–40	3200	650–1200	3.84	4650	11	X		X	X		X	
Hawa Frontslide 60 Matic Telescopic 4	40	28–40	3200	650–1200	3.94	5800	14.7	X		X	X		X	
Hawa Frontslide 100 Matic	100	28–50	3200	min. 650	6.24	7500	6.24		X				X	
Hawa Frontslide 100 Matic Symmetric 2	80	28–50	3200	min. 650	6.24	7500	12		X				X	
Hawa Frontslide 100 Matic Symmetric 2+2	70	28–40	3200	650–1200	3.84	7000	14.7	X		X	X		X	
Hawa Frontslide 100 Matic Telescopic 2	90	28–40	3200	650–1200	3.84	3500	7.4	X		X	X		X	
Hawa Frontslide 100 Matic Telescopic 3	80	39–40	3200	650–1200	3.84	4650	11	X		X	X		X	
Hawa Frontslide 100 Matic Telescopic 4	70	28–40	3200	650–1200	3.84	5800	14.7	X		X	X		X	
Hawa Frontslide 140 Matic	140	28–60	3200	min. 750	6.24	7500	6.24		X				X	
Hawa Frontslide 140 Matic Symmetric 2	100	28–60	3200	min. 750	6.24	7500	12		X				X	
Hawa Frontslide 140 Matic Telescopic 2	140	28–40	3200	750–1200	3.84	3500	7.4	X		X	X		X	
Folding sliding shutters														
Hawa Frontfold	30	28–36	3200	200–600		12 000	38.4	X					X	X
Hawa Frontfold 30 IS	30	28–36	3200	200–600		2×6000	2×19.2	X					X	X
Hawa Frontfold 30 MS	30	28–36	3200	200–600		2×6000	2×19.2	X					X	X
Hawa Frontfold 30 FS	30	28–36	3200	200–600		2×6000	2×19.2	X					X	X
Hawa Frontego	30	28–32	700–3200	300–600	1.92	3.6 m	2×12	X					X	X
Hawa Frontego 30 Matic	30	28–32	700–3200	300–600	1.92	3.6 m	2×12	X					X	X
Special solution, stackable														
Hawa Aperto	60	35–50	2600	550–950	2.47	min. 550	min. 1	X					X	
Hawa Aperto 60 H	60	35–50	2600	550–950	2.47	min. 550	min. 1	X					X	
Windows														
Hawa Vertical	150	85	1200	3200*					X				X	X
Hawa Vertical 150	150	85	1200	3200*					X				X	X

* For larger leaves, the wire cable and the guide tracks must be ordered separately.

Technical information

General information

- When closed, the fittings are tested to meet wind resistance class 6, in accordance with EN 13659.
- Max. attack surface per shutter is 1.2m^2. Larger shutters must be perforated accordingly as the wind resistance class will be reduced otherwise.
- From 1m^2 attack surface, a second tension latch must be installed, otherwise the wind resistance class will be reduced.
- Max. leaf weight 30 kg, max. weight of the complete system 180 kg (see order overview page 32–33).
- The wind resistance class of the shutters is the responsibility of the manufacturer.
- Hawa Sliding Solutions AG generally recommends using stainless steel mounting screws and rivets. At least A2 quality, A4 for use in coastal areas.
- From wind speeds of 60 km/h, the shutters must be moved to the safe position. Systems that fold outwards must be closed and tension latch hooked in, systems that fold inwards must be opened and secured to the wall.
- Do you need support or do you have an unusual idea? Contact us at info@hawa.com

Overview of wind resistance classes

DIN EN 13659	Wind resistance classes						
	0	**1**	**2**	**3**	**4**	**5**	**6**
Nominal wind pressure (N/m^2)	<50	50	70	100	170	270	400
Safety pressure (N/m^2)	<75	75	100	150	250	400	600
Wind velocity	< 32.5 km/h < 9 m/s	32.5 km/h 9 m/s	38 km/h 10.7 m/s	46 km/h 12.8 m/s	60 km/h 16.7 m/s	76 km/h 21.0 m/s	92 km/h 25.6 m/s
Beaufort scale	< 5 bft	5 bft	6 bft	7 bft	8 bft	9 bft	10 bft
Designation	moderate breeze	fresh breeze	strong breeze	high wind	gale	strong gale	storm

Wherever you are – we are there for you

Our integrated sales and service area is the right contact for inquiries concerning our solutions, products and systems. We look forward to you contacting us by e-mail or telephone.

Contact
info@hawa.com, Tel. +41 44 787 17 17, Fax +41 44 787 19 18

Hawa Sliding Solutions AG
Factory Mettmenstetten (headquarters)
Untere Fischbachstrasse 4
8932 Mettmenstetten, Switzerland

Hawa Sliding Solutions AG
Factory Sirnach
Wilerstrasse 90
8370 Sirnach, Switzerland

We would be pleased to support you worldwide:

North America

Our North American subsidiary is in Dallas, Texas, and looks after sales and technical partners in the USA and Canada.

Hawa Group Americas Inc.
1825 Market Center Blvd, Suite 345, LB #22
Dallas, TX 75207, United States of America
Tel. +1 214 760 9054, Fax +1 214 760 8627

Asia and the Pacific

Our latest subsidiary is in Singapore. We have been looking after sales and specialist partners in the South East Asia, Australia and Pacific Basin areas since 2017.

Hawa Sliding Solutions APAC Pte. Ltd
123 Penang Road, #06-13 Regency House
238465 Singapore, Singapore
Tel. +65 6887 4900

Middle East

Our subsidiary in Dubai has been advising and supporting our sales and specialist partners on the Arabian peninsula since 2005. In addition to the United Arab Emirates, we also look after partners in Saudi Arabia, Bahrain, Oman and other surrounding countries from here.

Hawa Middle East FZE
Office #126, 1st Floor, Jafza 17, Jebel Ali Free Zone
Dubai, United Arab Emirates
Tel. +971 4 887 3694, Fax +971 4 887 3693

The right sliding solution for every need and every idea

Our overall product range for sliding solutions on buildings, in buildings and on furniture covers all requirements in all areas of application, movement types and sliding versions.

This overall product range will undergo continuous further development. Hawa Sliding Solutions also provides individual, made-to-measure solutions. Special solutions such as this are developed in close collaboration with our partners and customers. Perhaps together with you?

On buildings

	Technical specifications							Design/installation					Exterior application	
Sliding shutters														
Hawa Frontslide	60/100/140	28–60	3200	min. 400				X	X	X	X		X	
Hawa Frontslide Matic	60/100/140	45/50/60	3200		6.24	7500	14.7	X	X	X	X		X	
Folding sliding shutters														
Hawa Frontfold	30	28–36	3200	200–600		12 000	38.4	X					X	X
Hawa Frontego	30	28–32	700–3200	300–600	1.92	3.6 m	2×12	X					X	X
Special solution, stackable														
Hawa Aperto	60	35–50	2600	550–950	2.47	min. 550	min. 1	X					X	
Windows														
Hawa Vertical	150	85	1200	3200*					X				X	X

* With a height of 1,200 mm, the width is limited to 2,000 mm because of the pulley
** With a width of 3,200 mm, the height is limited to 900 mm because of the pulley

In buildings

	Technical specifications						Installation						Recommended application			Exterior application	
Wood																	
Sliding doors																	
Hawa Junior	40/80/100/120/160/250	35–80	4000	3000		40/80/120	X	X	X	X		X	X	X	X		
Hawa Media	70	35–80	4000	3000			X	X		X			X	X			
Hawa Ordena	70	30–40	2600	3000				X	X	X			X	X			
Hawa Porta	40/45/60/100/300/600	18–100	6000	5000		40/60/100	X	X	X	X			X	X	X		
Hawa Silenta	150	35–80	4000	3000				X	X	X			X	X			
Hawa Super	500	45–100	6000	5000			X	X		X			X	X	X		
Hawa Suono	100	min. 51	2700	700	1340	X	X			X			X	X	X		
Sliding walls																	
Hawa Aperto	60	35–50	2600	550–1500	13600			X		X		X	X	X	X	X	
Hawa Junior	80	32–80	4000	500–1200	6750			X		X		X	X	X	X		
Hawa Divido	100	28–30	2400	1200	6000	X	X	X	X	X	X		X	X	X		
Hawa Variotec	150	36–68	4000	700–1500	12000			X		X		X	X	X	X		
Folding sliding walls																	
Hawa 20 c Folding wall	120	42–80	4000	1000	7000			X		X		X	X	X	X		
Hawa Centerfold	80	35–45(57)	4000	500–900	6000			X	X	X		X	X	X	X		
Hawa Variofold	80	35–45(57)	4000	500–900	6310			X	X	X		X	X	X	X		
Transport systems																	
Hawa Varioflex	40	35-80	4000	900				X		X				X			
Glass																	
Sliding doors																	
Hawa Junior	40/80/100/120/160/250	8–16	4000	3000		40/80/120	X	X	X	X			X	X	X		
Hawa Ordena	70	8–10.7	2600	600–3000				X	X	X			X	X	X		
Hawa Porta	40/100	6–12.7	2700	1600		40/60/100	X	X	X	X			X	X	X		
Hawa Puro	150	8–12.7	3000	750–3000				X	X	X			X	X	X		
Hawa Purolino Plus	80	8–12.7	3000	600–3000		X	X	X	X	X			X	X	X		
Hawa Super	250	8–80	4000	3000			X	X		X				X	X		
Sliding walls																	
Hawa Aperto	60	8–10 (30)	2600	500–1100	10900			X		X		X	X	X	X	X	
Hawa Divido	100	5.9–10 (30)	2750	1200	6000	X	X	X	X	X	X		X	X	X		
Hawa Shopfront	400	8–16 (50)	3500	3000	12000			X		X				X	X	X	
Hawa Variotec	150	10–13 (36)	3500	700–1500				X		X		X		X	X	X	
Folding sliding walls																	
Hawa Centerfold	80	10–13 (36)	2600	500–900	6000			X	X	X		X		X	X	X	
Hawa Variofold	80	10–13 (36)	2600	400–900	6310			X	X	X				X	X	X	
Hawa Junior	80	8–16 (26)	3000	500–1200	3700			X		X		X	X	X	X		
Showers																	
Hawa Banio	40	8–9	2200	800	1500	X	X			X			X	X	X		

On furniture

	Technical specifications					Design/installation							Recommended application		
Wood															
Sliding doors															
Hawa 220 Planfront	70	19–45	2600	400–1500					X		X	X	X	X	X
Hawa Aperto	40	19–25	2600	400–900					X				X	X	X
Hawa Clipo	15/16/26/36	10–25	2400	1200	X	X	X	X	X		X		X	X	X
Hawa Combino	20/35/40/50/65/80	19–40	2800	1600	X	X	X	X			X		X	X	X
Hawa Creation	25	6/19	2200	1200	X	X		X					X	X	X
Hawa Frontal	25	19	2000	800	X			X					X	X	X
Hawa Frontino	20/40	19–25	2400	600–1200	X						X		X	X	X
Hawa Libra	20	16–30	1000	1600					X		X		X	X	X
Hawa Miniroll	15/25	19–40	2600	1500		X							X	X	X
Hawa Regal A	25/40	19–50	2500	1200	X						X		X	X	X
Hawa Regal B	25	16–50	2000	1200	X	X			X		X		X	X	X
Hawa Regal C	16/26	16–19	2200	1200	X	X			X		X		X	X	X
Pivot and folding/sliding doors															
Hawa Concepta	25/30/40/50	19–50	1250–2850	300–900	X				X	X	X	X	X	X	X
Hawa Folding Concepta	25	19–26	1250–2600	300–700					X	X	X	X	X	X	
Folding sliding doors															
Hawa Multifold	30	19–25	2600	200–650					X	X	X		X	X	X
Pull-outs															
Hawa Forte	170/340	16–40	2400	800	X						X		X	X	X
Glass															
Sliding doors															
Hawa Clipo	16/26/36	4–8 (12/20)	2000	1000	X	X			X				X	X	X
Hawa Frontal	25	4/6 (20/22)	2200	800	X			X					X	X	X
Hawa Regal A	25	4 (22)	2200	1200							X		X	X	X
Hawa Regal B	25	4–8	1800	1200	X						X		X	X	X
Hawa Regal C	16/26	4–6.35 (12/20)	2000	1000	X	X					X		X	X	X

Index icons

Area of application

On buildings

In buildings

On furniture

Technical specifications

Weight

Thickness

Height

Width

Soft closing mechanism

Max. area per door

Max. system width

Max. area

Max. opening width

Design

IS Inslide

MS Mixslide

FS Forslide

IS Inslide Flush-fitting/ on one level

MS Mixslide Flush-fitting/ on one level

FS Forslide Flush-fitting/ on one lvel

Installation

Fully opening

Half opening

Wall mounting

Ceiling mounting

Ceiling mounting recessed

ol Top-running

ul Bottom-running

Light load Private access

Medium load Semi-public access

High load Public access

Inland More than 20 km from the coast

Coastal area Less than 20 km from the coast

Hawa Sliding Solutions AG
Untere Fischbachstrasse 4, 8932 Mettmenstetten, Switzerland
Phone +41 44 787 17 17, Fax +41 44 787 17 18
info@hawa.com, www.hawa.com

Subject to technical modifications. 789.0571.001/11.2020 Hawa Frontfold © Hawa Sliding Solutions AG