Window and Door Technology

Handles

for all opening types

Operation mechanisms catalogue
for PVC, timber and aluminium

Imprint
Copyright: September 2014
Roto Frank AG
Wilhelm-Frank-Platz 1
70771 Leinfelden-Echterdingen
Phone: +49 711 7598 0
Fax: +49 711 7598 253
info@roto-frank.com
www.roto-frank.com

General information

Information on this catalogue 4
Roto window handles – 10-year functional warranty 7
Product liability guidelines 9
Quality assurance requirements for RAL window handles 12
Functionality of lockable window handle 18
Secustik® mechanism 19
Tilt-First feature 20
Notes on surfaces 22
Handle configurator 23

Roto Swing

for Roto NT 26
for Roto Patio 43

Roto Line

for Roto NT 54
for Roto AL 80
for Roto Outward Opening 90
for Roto Patio 92
for Roto Inline 111

Roto Samba

for Roto NT 122

Roto Freestyle

for Roto AL 136
for Roto Inline 141

Handle accessories 146

Care 152

Colour chart 153

Markings

The following markings are used in this document:

Symbols	Explanation
Material	
	Timber
	PVC
	Aluminium
	Timber and aluminium
	Timber and PVC
	Timber, PVC and aluminium
Tilt&Turn opening types	
	Turning
	Turning and tilting
	Tilting
Outward Opening opening types	
	Outwards turning and folding
	Outwards turning
	Outwards tilting
Sliding opening types	
	Tilting and sliding
	Lifting and sliding
	Sliding
	Folding and sliding
Table name	
	Colour code
	Manufacturer
	Screws
	Spindle length
	Fork length

Symbols	Explanation
	Acabamento
№	

	Anodizado
	Lacado
	Metal-plated
Galvanizado	

Colour code	Colour	RAL number
R01.1	Silver	-
R01.2	Nickel silver	-
R01.3	Titanium	-
R01.4	Chromium	-
R01.5	Silver	-
R02.2	Anthracite	-
R03.1	Brass, matt	-
R03.2	Brass, polished	-
R03.3	Gold	-
R03.4	Stainless-steel design	-
R04.1	Grey brown	8019
R04.4	Black brown	8022
R05.3	Medium bronze	-
R05.4	Dark bronze	-
R05.5	Bronze	-
R06.2M	Jet black, matt	9005 matt
R06.2	Jet black	9005
R07.1	Pure white	9010
R07.2	Traffic white	9016
R07.3	Cream white	9001
R08.1	Steel blue	-
R09.1	Moss green	-
R09.2	Fir green	-
SP COL	Special colour	-
Raw	Unpainted, uncoated	-

Marking	Explanation
■	First level of the hierarchy in a list
–	Unordered list (second level of the hierarchy)
→ p. 12	(Cross) reference in tables
Refer to page 12	(Cross) reference in the text

All dimensions stated in mm.

Protection of copyright
The contents of this manual are protected by copyright. In the framework of the hardware manufacturing, the use of the contents is allowed. Any other or further use is not permitted without written permission of the manufacturer.

A high-quality Roto product always means the fulfilment of a promise of quality made to our customers. The best proof of this is a 10-year warranty on many of our window and door handles (if the relevant maintenance guidelines are adhered to; please refer to the chapter: "Product liability guidelines" on page 9–10).
These Roto window and door handles are tested for their long-term proper operation in a large number of tests. Long-term functional tests and static loading tests which realistically simulate the demanding "everyday life" of window and door handles are carried out depending on the requirements and thereby, in some cases, exceed the tests and demands of RAL-GZ 607/9.

In the cycles of the long-term functional tests according to RAL-GZ 607/9, the handles are tested separately. The operation of door and window handles is tested (in accordance with the appropriate operation cycle quantity) under realistic conditions while fixed to product test specimens (door and/or window element). This means that apart from the actual operational function, also the durable connection between the handle and the product test specimen is tested.

With the 10-year functional warranty, Roto surpasses the obligatory 2-year warranty enforced in the "BGB" (BGB = German Civil Code) and the 4-year warranty period stated in "VOB" for project business (VOB = German construction contract procedures).

Warranty service
Beyond the vendor's legal quality warranty, we as manufacturer warrant perfect durability of properly used Roto door and window handles under the following conditions. The warranty covers the function of Roto door and window handles and covers all defects that are evident as fabrication or material defects.

The functional warranty covers the following features:
– Transmission of the rotational motion for the door lock or for the Tilt&Turn window hardware
– Blocking mechanism (on window handles with special functions: lockable, automatic locking, Secustik®)

Warranty exemption
All replaceable individual parts, e.g. screws, connection pins (spindles) etc. are excluded from this warranty. Furthermore, no liability is accepted for damages that have arisen from:
– unsuitable and inappropriate application,
– defective and careless treatment,
– non-observance of installation and maintenance instructions, modifications and self repairs,
– chemical and physical damage of the material surface finish arising from improper use; for example damage caused by sharp objects,
– parts (doors, windows) and/or hardware components (e.g. locks, hinges, etc.) not in perfect working order.

Warranty conditions

Our warranty exclusively consists of either carrying out repairs on the product free of charge for the firsthand end-user within the warranty period or if we choose to do so, supply a free of charge replacement delivery of a similar handle. The warranty-recipient's incurred costs, expenses, postage and suchlike shall not be reimbursed. The warranty claim exists only upon presentation of the product and the proof that the defect in functionality occurred within the warranty period. This detection can be performed in particular upon presentation of the receipt of purchase. Therefore it is recommended to keep the sales receipt in a safe place at least until the expiration of the warranty period.

Warranty period

The warranty period for handles with high-quality promise is 10 years and begins on the day of purchase by the firsthand end-user. In case of complaints, please contact the seller or the manufacturer directly, presenting the product itself and proof of purchase.

According to the "product liability law", Roto is liable as manufacturer that the products offer the expected safety after they are placed on the market. Therefore, the following guidelines must be adhered to as well as the contents and notes in further documents which are referred to. Non-compliance exempts Roto of its liability.

1. Product information

Roto operating mechanisms are hardware components which aid the opening and closing motions and/or blocking processes of balcony doors and window elements for building/residential constructions.
Supplied fixing materials must be used.
To install hardware components in aluminium profiles, Roto recommends the use of fixing materials made from stainless steel or with a zinc flake coating. Contact corrosion can occur if other fixing materials are used.
Products which are used in an aggressive, corrosive environment are special hardware; they may only be used after consultation with Roto.

2. Proper specified use

Proper use of a locking system only occurs if
– the locking system has been assembled professionally with permissible hardware, locking appliances (i.e. keys & cylinders), as well as accessories (i.e. striker plate),
– the information, instructions and notes included in this guideline, this catalogue and other technical documents have been followed,
– the relevant mandatory legal provisions and technical standards have been followed,
– the assembly of the locking system was properly performed by experts whilst observing the information, instructions and notes issued by Roto about this and
– the maintenance and care instructions have been followed.

The duration of the adequacy of a product particularly depends on
– the operational frequency,
– the operational manner,
– the environment and care.
It is necessary to replace an operating element if the function cannot be guaranteed any more or if the surface creates an injury risk despite maintenance and care.

The locking systems are designed for profile cylinders.
The locking systems are not suitable for deformations and modifications of the final sealing-closure as a result of differences in temperature or building modifications.
The respective entire hardware set (locking system) must be properly assembled from Roto original hardware components. If hardware components are used which are not by Roto, Roto is not liable for any malfunctions or damages caused by them.
Windows and balcony doors for damp rooms and for use in environments with aggressive, corrosive air-content require special hardware.

3. Misuse (inappropriate or incorrect use)

In the event of a deviation from the correct use, a misuse or product abuse occurs which leads to a liability exclusion.
This particularly holds if

- auxiliary tools have been used for operation (e.g. pliers or attached pipes),
- additional loads (retaining and bracing forces) have been introduced (e.g. placing an object underneath a door handle to block the door),
- forces are used on the handle which exceed normal hand force (e.g. when attempting to remove a block of a Tilt&Turn hardware with an increased use of force) or when using door handles as a retaining element (e.g. with children),
- strange objects and/or incorrect objects are introduced (e.g. pins from outside manufacturers or the combination of non-Roto and Roto components),
- interventions or attacks occur which influence function (e.g. attempted break-ins or -outs with auxiliary tools with lockable window handles),
- the surface is damaged with sharp objects,
- because of the use of a non-Roto or non-specified object in the hardware system or striker plate perfect operation is prevented,
- a burglary attempt is carried out on the hardware system or striker plate, which results in a modification of the construction, or affects its function.

Further notes on misuse can be found in the product-specific documentation.

4. Product maintenance

The correct performance-related location of the hardware components and the fixing materials must be ensured!
For all moving parts – depending on demand possibly more often – the following maintenance work is to be carried out annually:
Hardware systems should be treated with maintenance agents recommended by Roto depending on demand.
They should not be treated with strong acids and alkaline solutions. Contamination with plaster and similar materials must be avoided in every case. Only cleaning agents which do not contain corrosive materials should be used.

5. Obligation to issue information and instructions

For further information, the following documents are available for trade, planners, architects, the consulting institutions, the fabricators, builders and users:
– catalogues and brochures,
– tendering texts,
– purchasing information,
– offer documents,
– instructions for assembly, operation and care.
Roto is also on hand to advise.

To select a Roto hardware system and for assembly, operation and care,
– architects, planners and consulting institutions are advised to order all necessary product information from Roto and observe it;
– specialised dealers are advised to observe the product information and notes contained in the documentation and also to order all necessary instructions from Roto and distribute them to fabricators;
– fabricators are advised to observe all product information and also to order operation and maintenance instructions from Roto and distribute to clients and users.

Significant (directive) for window hardware systems are RAL-GZ 607/9 and the DIN standards DIN EN 13126-3 and DIN 18267.

The European standard DIN EN 13126 consists of 19 parts. It deals with hardware for windows and balcony doors. Part 3 of this standard series has been completely reworked (edition February 2012). Using a 9-digit classification key (see page 14–16), it defines requirements and test procedures for operating handles, particularly for Tilt&Turn, Tilt-First and Turn-Only hardware.
In the first place of the classification key, two utilization categories have been introduced whilst considering different quality levels in Europe. The higher grade 2 represents the known and established product characteristics of previous RAL window handles. The seventh digit defines 3 grades for the protective effect of lockable window handles. It was designed according to the requirements of the European standard for burglary-inhibition DIN EN 1627.

The European standard does not set requirements for the dimensions of the window handles. These are prescribed in DIN 18267 (e.g. spindle □ 7 mm, inside micrometer of the screw fixing 43 mm).

The reworked DIN EN 13126-3 forms the foundation of the newly established quality guideline RAL-GZ 607/9 (version September 2012). For this, it is a minimum requirement that window handles correspond to grade 2 of the utilization category and grade 2 or 3 of the protective effect (see tables, page 14–15). Next to this, RAL-GZ 607/9 makes the following distinctions:

RAL
Window handles with RAL-capable lock-in position, at least 10,000 Tilt&Turn cycles, at least 48 h corrosion resistance in a salt spray test.

RAL – minimum requirements in accordance with DIN EN 13126-3:
RAL100

Utilization category	Durability	Mass	Fire resistance	Utilization safety	Corrosion resistance	Protective effect	Application	Test size
2	**3/180**	**–**	**0**	**1**	**2**	**0/0**	**3/C1**	**–**

lockable or bar-able window handle with RAL-capable lock-in position, at least 10,000 Tilt&Turn cycles, at least 48 h corrosion resistance in a salt spray test, 100 Nm resistance against twisting off and ripping off, deadbolt or locking mechanism with at least 100 possible locking variations.

RAL100 – Minimum classification according to DIN EN 13126-3:

Utilization category	Durability	Mass	Fire resistance	Utilization safety	Corrosion resistance	Protective effect	Application	Test size
2	**3/180**	**–**	**0**	**1**	**2**	**2/1***	**3/C1**	**–**
2	**3/180**	**–**	**0**	**1**	**2**	**2/3****	**3/C1**	**–**

* Deadbolt mechanism ** Locking mechanism

RAL200

Lockable or bar-able window handle with RAL-capable lock-in position, at least 10,000 Tilt&Turn cycles, at least 48 h corrosion resistance in a salt spray test, 200 Nm resistance against twisting off and ripping off, deadbolt or locking mechanism with at least 100 possible locking variations.

RAL200 – Minimum classification according to DIN EN 13126-3:

Utilization category	Durability	Mass	Fire resist-ance	Utilization safety	Corrosion resistance	Protective effect	Application	Test size
2	**3/180**	**–**	**0**	**1**	**2**	**3/1***	**3/C1**	**–**
2	**3/180**	**–**	**0**	**1**	**2**	**3/3****	**3/C1**	**–**

* Deadbolt mechanism ** Locking mechanism

To achieve the RAL quality label, it is necessary that the minimum requirements of DIN EN 13126-3 are met and also that in-house and independent monitoring by a recognised testing institute is performed constantly. This ensures a consistently high quality level of the products.

Explanations about the classification key of the DIN EN 13126-3 can be found on the following pages.

Classification key in DIN EN 13126-3:2012-02

1. digit: Utilization category (according to the main test parameters)

Grade 1

Locking torque before and after the durability test	Interim run $M_0 \leq 1.4$ Nm	Diseng. torque $M_a \leq 6.0$ Nm	Diff. value $M_d \geq 0.4$ Nm
free play at right angle and parallel to the mounting plane	$\Delta \leq 6$ mm		
Torsion strength 200 N/85 mm/30 s	Permissible deformation $\Delta \leq 5$ mm		
Tension strength of the pin connection	F ≥ 100 N		
Tension strength non-centred	F = 600 N		

Grade 2

Locking torque before and after the durability test	Interim run $M_0 \leq 0.8$ Nm	Diseng. torque $M_a \leq 4.0$ Nm	Diff. value $M_d \geq 0.8$ Nm
free play at right angle and parallel to the mounting plane	$\Delta \leq 4$ mm		
Torsion strength 200 N/85 mm/30 s	Permissible deformation $\Delta \leq 2$ mm		
Tension strength of the pin connection	F ≥ 100 N		
Tension strength non-centred	F = 1,200 N		

2. digit: Durability

Grade 3/90	10,000 Turn cycles
Grade 4/90	15,000 Turn cycles
Grade 5/90	25,000 Turn cycles
Grade 3/180	10,000 Tilt&Turn cycles
Grade 4/180	15,000 Tilt&Turn cycles
Grade 5/180	25,000 Tilt&Turn cycles

3. digit: Mass
no requirements according to main part EN 13126-1

4. digit: Fire resistance
no requirements according to main part EN 13126-1

5. digit: Utilization safety
Grade 1 according to main part EN 13126-1

6. digit: Corrosion resistance
at least grade 2 of EN 1670 according to main part EN 13126-1

7. digit: Protective effect (according to additional test parameters)

Grade 0:	no protective effect
Grade 1:	35 Nm resistance to twisting off and ripping off
Grade 2:	100 Nm resistance to twisting off and ripping off
Grade 3:	200 Nm resistance to twisting off and ripping off
Extension 0:	No locking mechanism
Extension 1:	Deadbolt mechanism
Extension 2:	Locking mechanism with key with ≤ 99 locking variations
Extension 3:	Locking mechanism with key with ≥ 100 locking variations

This leads to the following combination options for the 7. digit:

0/0	Without protective effect/without locking mechanism
1/1	35 Nm resistance to twisting off and forceful removal/deadbolt mechanism
1/2	35 Nm resistance to twisting off and forceful removal/locking mechanism with key with ≤ 99 locking variants
1/3	35 Nm resistance to twisting off and forceful removal/locking mechanism with key with at least 100 locking variants
2/1	100 Nm resistance to twisting off and forceful removal/deadbolt mechanism
2/2	100 Nm resistance to twisting off and forceful removal/locking mechanism with key with ≤ 99 locking variants
2/3	100 Nm resistance to twisting off and forceful removal/locking mechanism with key with at least 100 locking variants
3/1	200 Nm resistance to twisting off and forceful removal/deadbolt mechanism
3/2	200 Nm resistance to twisting off and forceful removal/locking mechanism with key with ≤ 99 locking variants
3/3	200 Nm resistance to twisting off and forceful removal/locking mechanism with key with at least 100 locking variants

8. digit: Application
Applied part of this European Standard: Grade 3

Application N:	without locking function
Application C:	with locking function
Version 1:	window handle
Version 2:	espagnolette handle

This leads to the following combination options for the 8. digit:

3/N1	Part 3/without locking function/window handle
3/N2	Part 3/without locking function/espagnolette handle
3/C1	Part 3/with locking function/window handle
3/C2	Part 3/with locking function/espagnolette handle

9. digit: Test size
No requirement

Example:

Utilization category	Durability	Mass	Fire resist-ance	Utilization safety	Corrosion resistance	Protection effect	Application	Test size
2	3/180	–	0	1	2	3/3	3/C1	–

Explanation:

1. digit: Operating handle of the utilization category 2

2. digit: Tested with 10,000 Tilt&Turn cycles

3. digit: No requirements for the mass of the window (not intended)

4. digit: No requirements for fire resistance of the window (not intended)

5. digit: Utilization safety 1 (only intended like that)

6. digit: Corrosion resistance grade 2 of DIN EN 1670 (corresponds to 48 h in neutral 1. digit salt spray test)

7. digit: 200 Nm resistance to twisting off and forceful removal/locking mechanism with key with at least 100 locking variants

8. digit: Use as window handle with engaging mechanism (lock-in)

9. digit: No requirements on the test size of the window (not intended)

Tab. 1: Operation mechanism Standard and Standard, lock-in position 45°

Utilization category	Durability	Mass	Fire resist-ance	Utilization safety	Corrosion resistance	Protective effect	Application	Test size
2	**3/180**	**–**	**0**	**1**	**5***	**0/0**	**3/C1**	**–**

* Surface brass (polished/painted) grade 4

Tab. 2: Operation mechanism Secustik and Secustik, lock-in position 45°

Utilization category	Durability	Mass	Fire resist-ance	Utilization safety	Corrosion resistance	Protective effect	Application	Test size
2	**3/180**	**–**	**0**	**1**	**5***	**0/0**	**3/C1**	**–**

* Surface brass (polished/painted) grade 4

Tab. 3: Operation mechanism lockable – 35 (40) Nm

Utilization category	Durability	Mass	Fire resist-ance	Utilization safety	Corrosion resistance	Protective effect	Application	Test size
2	**3/180**	**–**	**0**	**1**	**3**	**1/2**	**3/C1**	**–**

Tab. 4: Operation mechanism lockable – 100 Nm

Utilization category	Durability	Mass	Fire resist-ance	Utilization safety	Corrosion resistance	Protective effect	Application	Test size
2	**3/180**	**–**	**0**	**1**	**3**	**2/3**	**3/C1**	**–**

Tab. 5: Operation mechanism lockable – 200 Nm

Utilization category	Durability	Mass	Fire resist-ance	Utilization safety	Corrosion resistance	Protective effect	Application	Test size
2	**3/180**	**–**	**0**	**1**	**3**	**3/3**	**3/C1**	**–**

Tab. 6: Operation mechanism push-button

Utilization category	Durability	Mass	Fire resist-ance	Utilization safety	Corrosion resistance	Protective effect	Application	Test size
2	**3/180**	**–**	**0**	**1**	**5***	**1/1**	**3/C1**	**–**

* Surface brass (polished/painted) grade 4

Tab. 7: Operating element Tilt-First

Utilization category	Durability	Mass	Fire resist-ance	Utilization safety	Corrosion resistance	Protective effect	Application	Test size
2	**3/180**	**–**	**0**	**1**	**3**	**1/2**	**3/C1**	**–**

Roto lockable handles 100 Nm – the convenient security grade:

- Lockable window handle tested to a torque of 100 Nm*: high mechanical security that provides good burglary protection.
- Combined with a suitable window element, it meets the requirements of all burglary-resistance classes RC 1-6.
- Very convenient due to large turn-key and easy to use push cylinder.
- Locks the closed or tilted window rapidly and simply “at the push of a button”.
- Meets the requirements of the European standard DIN EN 1627–1630 and can therefore be marketed in all EU member states.

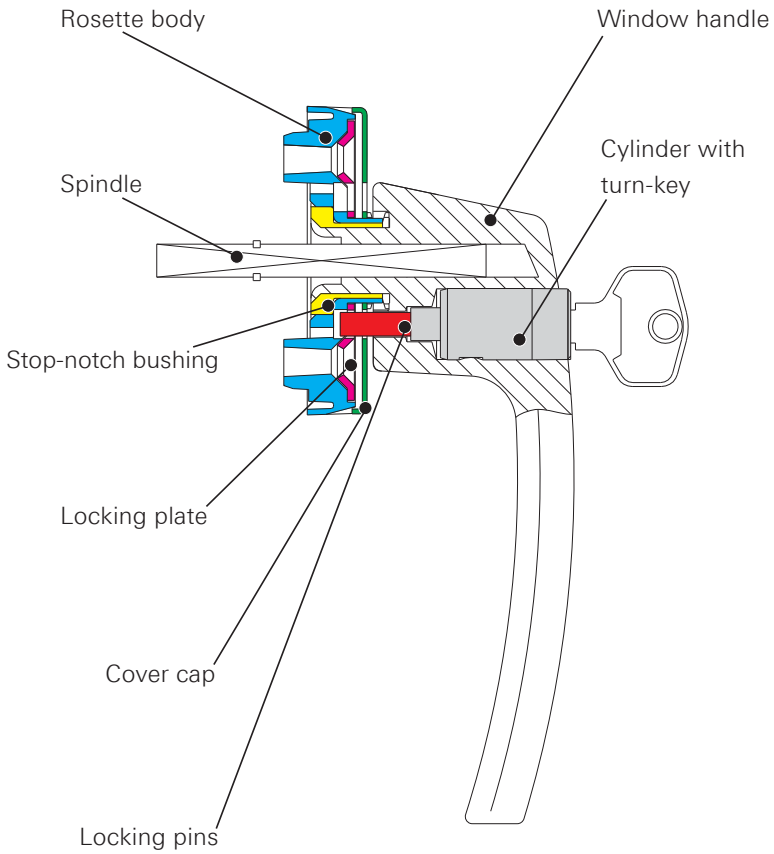

* 1 Nm (Newton metre) is the torque which generates a force of 1 N at the pivot point of a lever of 1 m length.

Secustik® window handles are equipped with a patented blocking mechanism as part of the integrated basic security. This prevents manipulating the window hardware from the outside. A swivel clutch between the handle and the spindle acts in this case as a “mechanical diode”. It permits normal operation of the window handle from the inside, blocks the handle however if somebody attempts to manipulate the window handle via the hardware from the outside.
During the Secustik® handles 180° operation from the locking mode to the tilting mode, the self-locking blocking mechanism engages into the different handle positions with a distinct click. This click emphasises the outstanding plus in security.

This is how the Secustik® technology works

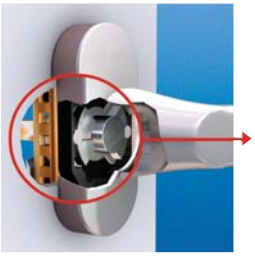

Secustik® window handles patented blocking mechanism.

When turning the window handle, the spring-loaded safety pins ① engage into special recesses in the housing ② with a distinct click.

During the turn movement, the safety pins ① are moved along the swivel clutch ③ into further recesses ② where they again audibly engage.

Secustik® technology effectively prevents attempted break-ins

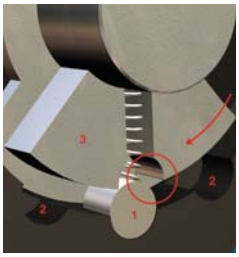

In the case of an attempted break-in, the safety pins ① are pushed through a second swivel clutch ③ into the housing recesses ②.

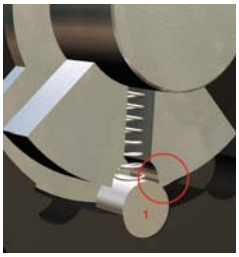

In this position, the safety pins ① effectively prevent turning the window from the outside. The window handle blocks and prevents the attempted break-in.

Secustik® is a registered trademark of HOPPE Holding AG.

Locking and unlocking

The key locks or unlocks the handle.
If the handle is unlocked, it can be moved freely.
Lock: Turn the key 180° counterclockwise.
Unlock: Turn the key 180° clockwise.

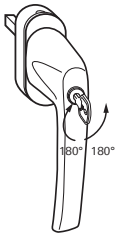

Tilt:

Turn the unlocked handle 90° (tilt-mode = horizontal), in order to tilt the window. Without the key, the handle cannot be turned and brought into the turn mode (vertical).

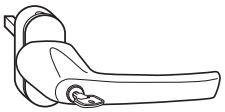

Turn:

Precondition: The handle is in the tilt-mode (horizontal) when the window is closed. Turn the key 45° and hold; simultaneously turn the handle 90° and bring the handle into the turn-mode (vertical).
Tilt-First handles should only be operated when the window is closed.

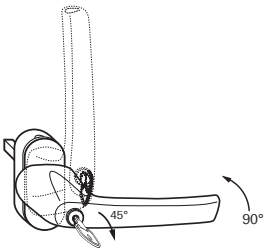

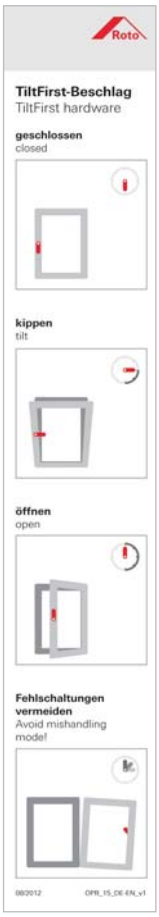

The lockable Roto Tilt-First handle (tilt before turn) locks the window sash in the tilt mode, with the handle in the horizontal position. The lockable handle prevents the possibility of changing from tilting to turning in order to fully open the window. This is only possible after unlocking.
The handle is equipped with a free-running mechanism between the locked position and the tilted position (unlocking the cylinder is not necessary) in order to enable ventilating. A blocking mechanism is located at the limit-stop of 90° tilt position. Continuing to move the handle into the 180°turn position is only possible after unlocking the cylinder.
Furthermore, the handle can be locked in the 0° locked position, thus providing an additional burglar-inhibiting security function.
In addition, this innovative handle is equipped with a unique automatic locking function that blocks the opening operation in the 180° turn mode, without locking the cylinder.

Important: The Tilt-First (TF) function can only be ensured with Tilt-First hardware or T&T hardware dedicated for this usage.

Each Roto TF window-handle package contains a sticker as depicted on the left with information on the Tilt-First function.

Eloxal-process (anodising)

This method of surface technology produces a protective oxide layer on aluminium by anodic oxidation. By changing the top metal layer, a 5 to 25 micrometer thin oxide layer is created, which protects deeper layers from corrosion provided that there are no gaps in the layer, for example created by mechanical damages.

Powder coating

When powder coating, first an electrically charged powder cloud is created. The charged particles are transported to the workpiece surface. They are deposited there, stick on electrostatically and form the powder paint coating. When the workpiece is heated, the paint particles of the powder paint form a homogeneous surface.

Wet paint

For this painting process, the liquid coating material is sprayed using compressed air. This creates a soft paint jet with minimal colour mist. The procedure is particularly suited for small and miniscule amounts. The amount of dispensed material can be adjusted very precisely and flexibly depending on the object to be coated and the coating material.

Metal-plating

A sealing coat created galvano-technically for special decorative aesthetics as well as corrosion protection.

Symbol	Explanation
Surface finishes	
	Anodised
	Powder coated (for RAL colours)
	Wet painted
	Metal-plated
ep	Electroplating

Finding the perfect handle for each individual decorating style, with just a few clicks. The Roto handle configurator offers this to consulting window fabricators and their customers. The online service has already been extremely successful in the German and English versions and is now available in the languages, French, Hungarian, Polish, Dutch, Spanish and Rumanian.

To immediately display the suitable version on a screen or to Smartphone, just four specifications must must be made. After selecting the required handle series, so for example, the Roto Samba, the available versions (lockable, with push-button etc.), the handle colour and the material of the window frame can be set.

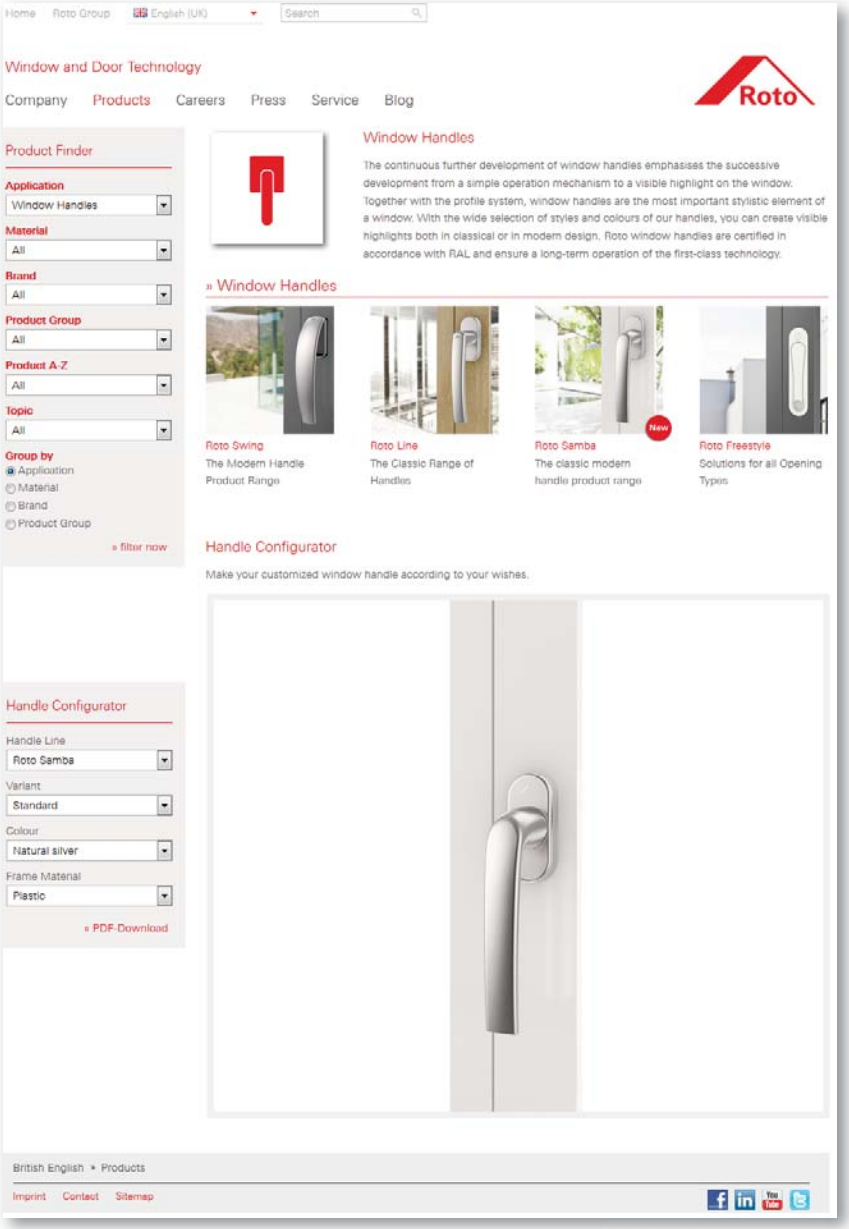

The direct way to the handle configurator.

With four clicks to your desired design element: The successful Roto handle configurator is currently available in eight languages.

Roto Swing
The modern handle product range

Roto Swing is a convincing individual design feature.

The continuous further development of window handles emphasises the successive development from a simple operation mechanism to a visible highlight on the window. Besides great ease of use, durable quality and functionality, the focus is also on its unusual shape. The curved design stands for the special "swing" – elegant and at the same time ergonomically advantageous.

Roto

Roto Swing Standard

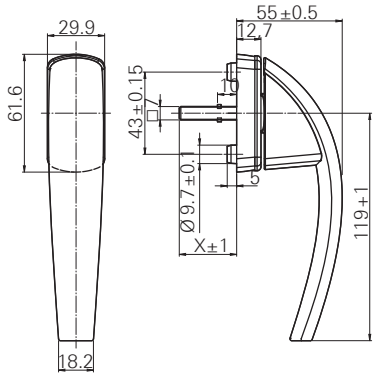

Parts list

Colour Design element | Cover | Rosette							№
Spindle length 32							
Silver Silver grey | Silver grey | Silver grey	R01.1		M5X40	32		15	641112
Silver Black | Silver grey | Black	R01.1		M5X40	32		15	641113
Titanium Grey | Grey | Grey	R01.3		M5X40	32		15	641114
Traffic white Traffic white | Traffic white | Traffic white	R07.2		M5X40	32		15	641115
Traffic white F7503 | Traffic white | Traffic white	R07.2		M5X40	32		15	641116
Spindle length 37							
Silver Silver grey | Silver grey | Silver grey	R01.1		M5X45	37		15	641117
Silver Black | Silver grey | Black	R01.1		M5X45	37		15	641118
Nickel silver Beige | Beige | Beige	R01.2		M5X45	37		15	641119
Titanium Grey | Grey | Grey	R01.3		M5X45	37		15	641120
Brass, matt Pantone 468C | Gold | Pantone 468C	R03.1		M5X45	37		15	641121
Black brown Brown | Brown | Brown	R04.4		M5X45	37		15	641122
Medium bronze Pantone 462C | Medium bronze | Pantone 462C	R05.3		M5X45	37		15	641123
Bronze Pantone 462C | Bronze | Pantone 462C	R05.5		M5X45	37		15	641124
Traffic white Traffic white | Traffic white | Traffic white	R07.2		M5X45	37		15	641125
Traffic white F7503 | Traffic white | Traffic white	R07.2		M5X45	37		15	641126

Product description

- Handle range with elements designed in different colours

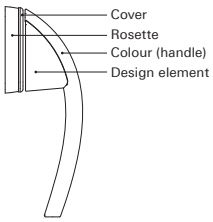

- Basic handle without additional functions
- 90-degree lock-in position
- Classification according to DIN EN 13126-3, see page 17, table 1
- 10-year functional warranty
-
-

Scope of delivery

- 1 window handle
- 2 fixing screws

Colour Design element | Cover | Rosette							№
Spindle length 43							
Silver Silver grey | Silver grey | Silver grey	R01.1		M5X50	43		15	641127
Silver Black | Silver grey | Black	R01.1		M5X50	43		15	641128
Nickel silver Beige | Beige | Beige	R01.2		M5X50	43		15	641129
Titanium Grey | Grey | Grey	R01.3		M5X50	43		15	641130
Brass, matt Pantone 468C | Gold | Pantone 468C	R03.1		M5X50	43		15	641131
Black brown Brown | Brown | Brown	R04.4		M5X50	43		15	641132
Medium bronze Pantone 462C | Medium bronze | Pantone 462C	R05.3		M5X50	43		15	641133
Bronze Pantone 462C | Bronze | Pantone 462C	R05.5		M5X50	43		15	641134
Traffic white Traffic white | Traffic white | Traffic white	R07.2		M5X50	43		15	641135
Traffic white F7503 | Traffic white | Traffic white	R07.2		M5X50	43		15	641136

Roto Swing Standard for night ventilation

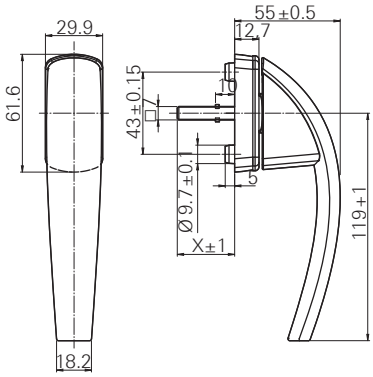

Parts list

Colour Design element | Cover | Rosette							
Spindle length 32							
Silver Silver grey | Silver grey | Silver grey	R01.1		M5X45	32		20	613997
Nickel silver Beige | Beige | Beige	R01.2		M5X45	32		20	613998
Titanium matt Grey | Grey | Grey	R01.3		M5X45	32		20	613999
Brass, matt Pantone 468C | Gold | Pantone 468C	R03.1		M5X45	32		20	614000
Medium bronze Pantone 462C | Medium bronze | Pantone 462C	R05.3		M5X45	32		20	613859
Bronze Pantone 462C | Bronze | Pantone 462C	R05.5		M5X45	32		20	614001
Traffic white Traffic white | Traffic white | Traffic white	R07.2		M5X45	32		20	614002
Spindle length 37							
Silver Silver grey | Silver grey | Silver grey	R01.1		M5X45	37		20	607855
Nickel silver Beige | Beige | Beige	R01.2		M5X45	37		20	615684
Titanium matt Grey | Grey | Grey	R01.3		M5X45	37		20	607854
Brass, matt Pantone 468C | Gold | Pantone 468C	R03.1		M5X45	37		20	615685
Black brown Brown | Brown | Brown	R04.4		M5X45	37		20	615686
Medium bronze Pantone 462C | Medium bronze | Pantone 462C	R05.3		M5X45	37		20	613862
Bronze Pantone 462C | Bronze | Pantone 462C	R05.5		M5X45	37		20	615687
Traffic white Traffic white | Traffic white | Traffic white	R07.2		M5X45	37		20	607853

Product description

- Handle range with elements designed in different colours

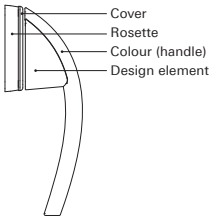

- Basic handle
- 90-degree lock-in position, 45-degree lock-in position for night ventilation
- Classification according to DIN EN 13126-3, see page 17, table 1
- 10-year functional warranty
-
-

Scope of delivery

- 1 window handle
- 2 fixing screws

Colour Design element | Cover | Rosette							№
Spindle length 43							
Silver Silver grey | Silver grey | Silver grey	R01.1		M5X50	43		20	607856
Nickel silver Beige | Beige | Beige	R01.2		M5X50	43		20	632254
Titanium matt Grey | Grey | Grey	R01.3		M5X50	43		20	607858
Brass, matt Pantone 468C | Gold | Pantone 468C	R03.1		M5X50	43		20	632280
Black brown Brown | Brown | Brown	R04.4		M5X50	43		20	632281
Medium bronze Pantone 462C | Medium bronze | Pantone 462C	R05.3		M5X50	43		20	632282
Bronze Pantone 462C | Bronze | Pantone 462C	R05.5		M5X50	43		20	632283
Traffic white Traffic white | Traffic white | Traffic white	R07.2		M5X50	43		20	607857

Roto Swing Secustik®

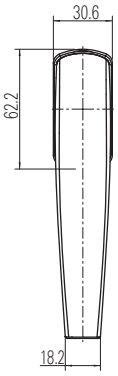

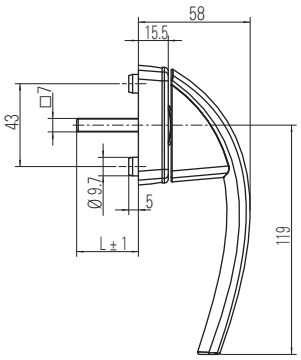

Parts list

Colour Design element | Cover | Rosette							Nº
Spindle length 32							
Silver Silver grey | Silver grey | Silver grey	R01.1		M5X45	32		15	641082
Silver Black | Silver grey | Black	R01.1		M5X45	32		15	641083
Titanium Grey | Grey | Grey	R01.3		M5X45	32		15	641084
Traffic white Traffic white | Traffic white | Traffic white	R07.2		M5X45	32		15	641095
Spindle length 37							
Silver Silver grey | Silver grey | Silver grey	R01.1		M5X50	37		15	641096
Silver Black | Silver grey | Black	R01.1		M5X50	37		15	641097
Titanium Grey | Grey | Grey	R01.3		M5X50	37		15	641098
Brass, matt Pantone 468C | Gold | Pantone 468C	R03.1		M5X50	37		15	641099
Black brown Brown | Brown | Brown	R04.4		M5X50	37		15	641100
Medium bronze Pantone 462C | Medium bronze | Pantone 462C	R05.3		M5X50	37		15	641101
Bronze Pantone 462C | Bronze | Pantone 462C	R05.5		M5X50	37		15	641102
Traffic white Traffic white | Traffic white | Traffic white	R07.2		M5X50	37		15	641103
Spindle length 43							
Silver Silver grey | Silver grey | Silver grey	R01.1		M5X55	43		15	641104
Silver Black | Silver grey | Black	R01.1		M5X55	43		15	641105
Titanium Grey | Grey | Grey	R01.3		M5X55	43		15	641106
Brass, matt Pantone 468C | Gold | Pantone 468C	R03.1		M5X55	43		15	641107
Black brown Brown | Brown | Brown	R04.4		M5X55	43		15	641108
Medium bronze Pantone 462C | Medium bronze | Pantone 462C	R05.3		M5X55	43		15	641109
Bronze Pantone 462C | Bronze | Pantone 462C	R05.5		M5X55	43		15	641110
Traffic white Traffic white | Traffic white | Traffic white	R07.2		M5X55	43		15	641111

Product description

- Handle design with elements in different colours

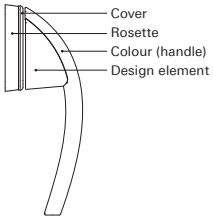

- Handle with automatic locking
- Security against manipulation from outside
- 90-degree lock-in position
- Classification according to DIN EN 13126-3, see page 17, table 2
- 10-year functional warranty
-
-

Scope of delivery

- 1 window handle
- 2 fixing screws

Note

Refer to page 19 for further information.

Roto Swing Secustik® for night ventilation

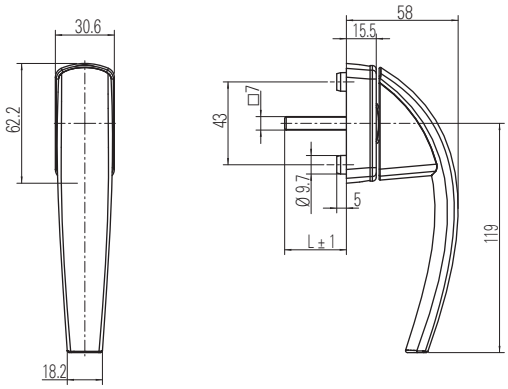

Parts list

Colour Design element | Cover | Rosette							№
Spindle length 32							
Silver Silver grey | Silver grey | Silver grey	R01.1		M5X45	32		20	613830
Nickel silver Beige | Beige | Beige	R01.2		M5X45	32		20	613831
Titanium matt Grey | Grey | Grey	R01.3		M5X45	32		20	613832
Brass, matt Pantone 468C | Gold | Pantone 468C	R03.1		M5X45	32		20	613833
Medium bronze Pantone 462C | Medium bronze | Pantone 462C	R05.3		M5X45	32		20	613856
Bronze Pantone 462C | Bronze | Pantone 462C	R05.5		M5X45	32		20	613834
Traffic white Traffic white | Traffic white | Traffic white	R07.2		M5X45	32		20	613855
Spindle length 37							
Silver Silver grey | Silver grey | Silver grey	R01.1		M5X50	37		20	613580
Nickel silver Beige | Beige | Beige	R01.2		M5X50	37		20	613823
Titanium matt Grey | Grey | Grey	R01.3		M5X50	37		20	613581
Brass, matt Pantone 468C | Gold | Pantone 468C	R03.1		M5X50	37		20	613824
Black brown Brown | Brown | Brown	R04.4		M5X50	37		20	613835
Medium bronze Pantone 462C | Medium bronze | Pantone 462C	R05.3		M5X50	37		20	613861
Bronze Pantone 462C | Bronze | Pantone 462C	R05.5		M5X50	37		20	613836
Traffic white Traffic white | Traffic white | Traffic white	R07.2		M5X50	37		20	613582

Product description

- Handle design with elements in different colours

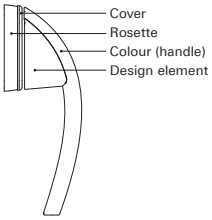

- Handle with automatic locking
- Security against manipulation from outside
- 90-degree lock-in position, 45-degree lock-in position for night ventilation
- Classification according to DIN EN 13126-3, see page 17, table 2
- 10-year functional warranty
-
-

Scope of delivery

- 1 window handle
- 2 fixing screws

Note

Refer to page 19 for further information.

Colour Design element | Cover | Rosette							№
Spindle length 43							
Silver Silver grey | Silver grey | Silver grey	R01.1		M5X55	43		20	632004
Nickel silver Beige | Beige | Beige	R01.2		M5X55	43		20	632035
Titanium matt Grey | Grey | Grey	R01.3		M5X55	43		20	632037
Brass, matt Pantone 468C | Gold | Pantone 468C	R03.1		M5X55	43		20	632038
Black brown Brown | Brown | Brown	R04.4		M5X55	43		20	632040
Medium bronze Pantone 462C | Medium bronze | Pantone 462C	R05.3		M5X55	43		20	632042
Bronze Pantone 462C | Bronze | Pantone 462C	R05.5		M5X55	43		20	632043
Traffic white Traffic white | Traffic white | Traffic white	R07.2		M5X55	43		20	632044

Roto Swing lockable – 40 Nm

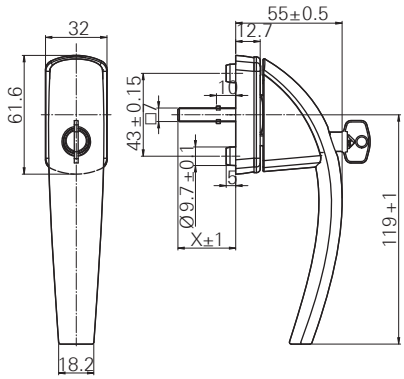

Parts list

Colour Design element | Cover | Rosette							№
Spindle length 32							
Silver Silver grey | Silver grey | Silver grey	R01.1		M5X45	32		15	632284
Nickel silver Beige | Beige | Beige	R01.2		M5X45	32		15	632285
Titanium Grey | Grey | Grey	R01.3		M5X45	32		15	632286
Brass, matt Pantone 468C | Gold | Pantone 468C	R03.1		M5X45	32		15	632287
Medium bronze Pantone 462C | Medium bronze | Pantone 462C	R05.3		M5X45	32		15	632288
Bronze Pantone 462C | Bronze | Pantone 462C	R05.5		M5X45	32		15	632289
Traffic white Traffic white | Traffic white | Traffic white	R07.2		M5X45	32		15	632290
Spindle length 37							
Silver Silver grey | Silver grey | Silver grey	R01.1		M5X45	37		15	632291
Titanium Grey | Grey | Grey	R01.3		M5X45	37		15	632292
Brass, matt Pantone 468C | Gold | Pantone 468C	R03.1		M5X45	37		15	632293
Black brown Brown | Brown | Brown	R04.4		M5X45	37		15	632294
Medium bronze Pantone 462C | Medium bronze | Pantone 462C	R05.3		M5X45	37		15	613860
Bronze Pantone 462C | Bronze | Pantone 462C	R05.5		M5X45	37		15	632295
Traffic white Traffic white | Traffic white | Traffic white	R07.2		M5X45	37		15	632296

Product description

- Handle design with elements in different colours

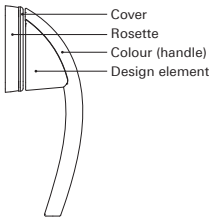

- Lockable handle with tested torque of 40 Nm
- Locking: Push cylinder with turn-key
- For locking and unlocking
- Operable if handle is unlocked
- 90-degree lock-in position
- Classification according to DIN EN 13126-3, see page 17, table 3
- 10-year functional warranty
-
-

Scope of delivery

- 1 window handle
- 1 key
- 2 fixing screws

Colour Design element | Cover | Rosette							№
Spindle length 43							
Silver Silver grey | Silver grey | Silver grey	R01.1		M5X50	43		15	632297
Titanium Grey | Grey | Grey	R01.3		M5X50	43		15	632298
Brass, matt Pantone 468C | Gold | Pantone 468C	R03.1		M5X50	43		15	632299
Black brown Brown | Brown | Brown	R04.4		M5X50	43		15	632300
Medium bronze Pantone 462C | Medium bronze | Pantone 462C	R05.3		M5X50	43		15	632301
Bronze Pantone 462C | Bronze | Pantone 462C	R05.5		M5X50	43		15	632302
Traffic white Traffic white | Traffic white | Traffic white	R07.2		M5X50	43		15	632303

Roto Swing lockable – 100 Nm

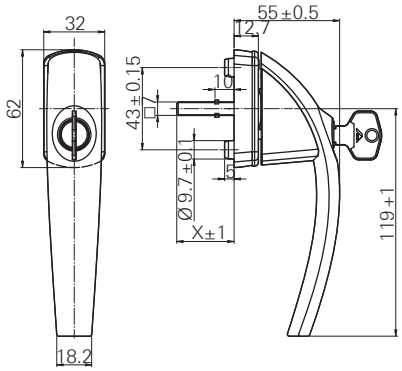

Parts list

Colour Design element | Cover | Rosette							№
Spindle length 32							
Silver Silver grey | Silver grey | Silver grey	R01.1		M5X45	32		15	632304
Nickel silver Beige | Beige | Beige	R01.2		M5X45	32		15	632305
Titanium Grey | Grey | Grey	R01.3		M5X45	32		15	632306
Brass, matt Pantone 468C | Gold | Pantone 468C	R03.1		M5X45	32		15	632307
Medium bronze Pantone 462C | Medium bronze | Pantone 462C	R05.3		M5X45	32		15	632308
Bronze Pantone 462C | Bronze | Pantone 462C	R05.5		M5X45	32		15	632309
Traffic white Traffic white | Traffic white | Traffic white	R07.2		M5X45	32		15	632310
Spindle length 37							
Silver Silver grey | Silver grey | Silver grey	R01.1		M5X45	37		15	632311
Nickel silver Beige | Beige | Beige	R01.2		M5X45	37		15	632312
Titanium Grey | Grey | Grey	R01.3		M5X45	37		15	632313
Brass, matt Pantone 468C | Gold | Pantone 468C	R03.1		M5X45	37		15	632314
Black brown Brown | Brown | Brown	R04.4		M5X45	37		15	632315
Medium bronze Pantone 462C | Medium bronze | Pantone 462C	R05.3		M5X45	37		15	632316
Bronze Pantone 462C | Bronze | Pantone 462C	R05.5		M5X45	37		15	632317
Traffic white Traffic white | Traffic white | Traffic white	R07.2		M5X45	37		15	632318

Product description

- Handle design with elements in different colours

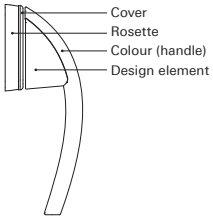

- Lockable handle with tested torque of 100 Nm
- Locking: Push cylinder with turn-key
- Simple and quick locking by pushing down the cylinder
- Meets the requirements of DIN EN 1627-1630, RC1 – RC6
- 90-degree lock-in position
- Classification according to DIN EN 13126-3, see page 17, table 4
- 10-year functional warranty
-
-

Scope of delivery

- 1 window handle
- 1 key
- 2 fixing screws

Note

Refer to page 18 for further information.

Colour Design element | Cover | Rosette							№
Spindle length 43							
Silver Silver grey | Silver grey | Silver grey	R01.1		M5X45	43		15	632319
Nickel silver Beige | Beige | Beige	R01.2		M5X45	43		15	632320
Titanium Grey | Grey | Grey	R01.3		M5X45	43		15	632321
Brass, matt Pantone 468C | Gold | Pantone 468C	R03.1		M5X45	43		15	632322
Black brown Brown | Brown | Brown	R04.4		M5X45	43		15	632323
Medium bronze Pantone 462C | Medium bronze | Pantone 462C	R05.3		M5X45	43		15	632324
Bronze Pantone 462C | Bronze | Pantone 462C	R05.5		M5X45	43		15	632325
Traffic white Traffic white | Traffic white | Traffic white	R07.2		M5X45	43		15	632326

Roto Swing push-button

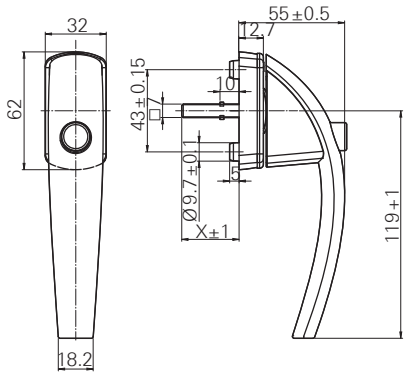

Parts list

Colour Design element | Cover | Rosette		Roto					Nº
Spindle length 32							
Silver Silver grey | Silver grey | Silver grey	R01.1		M5X40	32		15	641079
Titanium Grey | Grey | Grey	R01.3		M5X40	32		15	641080
Traffic white Traffic white | Traffic white | Traffic white	R07.2		M5X40	32		15	641081
Spindle length 37							
Silver Silver grey | Silver grey | Silver grey	R01.1		M5X45	37		15	632330
Nickel silver Beige | Beige | Beige	R01.2		M5X45	37		15	632331
Titanium Grey | Grey | Grey	R01.3		M5X45	37		15	632332
Brass, matt Pantone 468C | Gold | Pantone 468C	R03.1		M5X45	37		15	632333
Black brown Brown | Brown | Brown	R04.4		M5X45	37		15	632334
Medium bronze Pantone 462C | Medium bronze | Pantone 462C	R05.3		M5X45	37		15	632335
Bronze Pantone 462C | Bronze | Pantone 462C	R05.5		M5X45	37		15	632336
Traffic white Traffic white | Traffic white | Traffic white	R07.2		M5X45	37		15	632337
Spindle length 43							
Silver Silver grey | Silver grey | Silver grey	R01.1		M5X50	43		15	632338
Nickel silver Beige | Beige | Beige	R01.2		M5X50	43		15	632339
Titanium Grey | Grey | Grey	R01.3		M5X50	43		15	632340
Brass, matt Pantone 468C | Gold | Pantone 468C	R03.1		M5X50	43		15	632341
Black brown Brown | Brown | Brown	R04.4		M5X50	43		15	632342
Medium bronze Pantone 462C | Medium bronze | Pantone 462C	R05.3		M5X50	43		15	632343
Bronze Pantone 462C | Bronze | Pantone 462C	R05.5		M5X50	43		15	632344
Traffic white Traffic white | Traffic white | Traffic white	R07.2		M5X50	43		15	632345

Product description

- Handle range with elements designed in different colours

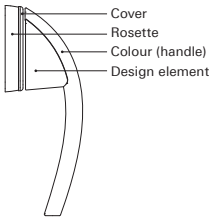

- Window handle with push-button
- Push-button function enables locking and unlocking
- 90-degree lock-in position
- Classification according to DIN EN 13126-3, see page 17, table 6
- 10-year functional warranty
-
-

Scope of delivery

- 1 window handle
- 2 fixing screws

Roto Swing Tilt-First, lockable – 40 Nm

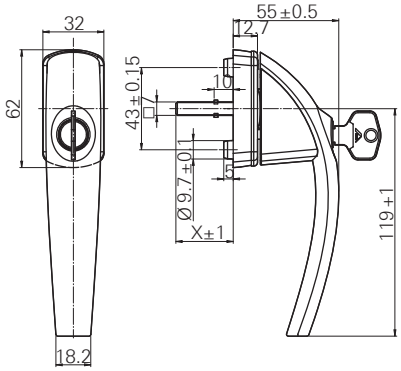

Parts list

Colour Design element | Cover | Rosette							№
Spindle length 32							
Silver Silver grey | Silver grey | Silver grey	R01.1		M5X45	32		15	632327
Titanium Grey | Grey | Grey	R01.3		M5X45	32		15	632328
Traffic white Traffic white | Traffic white | Traffic white	R07.2		M5X45	32		15	632329
Spindle length 37							
Silver Silver grey | Silver grey | Silver grey	R01.1		M5X45	37		15	641137
Titanium Grey | Grey | Grey	R01.3		M5X45	37		15	641138
Brass, matt Pantone 468C | Gold | Pantone 468C	R03.1		M5X45	37		15	641139
Medium bronze Pantone 462C | Medium bronze | Pantone 462C	R05.3		M5X45	37		15	641140
Bronze Pantone 462C | Bronze | Pantone 462C	R05.5		M5X45	37		15	641141
Traffic white Traffic white | Traffic white | Traffic white	R07.2		M5X45	37		15	641142
Spindle length 43							
Silver Silver grey | Silver grey | Silver grey	R01.1		M5X50	43		15	641143
Titanium Grey | Grey | Grey	R01.3		M5X50	43		15	641144
Brass, matt Pantone 468C | Gold | Pantone 468C	R03.1		M5X50	43		15	641145
Black brown Brown | Brown | Brown	R04.4		M5X50	43		15	641146
Medium bronze Pantone 462C | Medium bronze | Pantone 462C	R05.3		M5X50	43		15	641147
Bronze Pantone 462C | Bronze | Pantone 462C	R05.5		M5X50	43		15	641148
Traffic white Traffic white | Traffic white | Traffic white	R07.2		M5X50	43		15	641149

* In connection with Tilt-First sash stay and Tilt-First tilt striker

Product description

- Handle design with elements in different colours

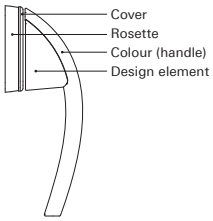

- Lockable handle with tested torque of 40 Nm
- For window systems with Tilt-First operation (tilt before turn)
- Locking: Push cylinder with turn-key
- Lockable in 0-degree and 90-degree position
- 90-degree lock-in position
- Classification according to DIN EN 13126-3, see page 17, table 7
- 10-year functional warranty
-
-

Scope of delivery

- 1 window handle
- 1 key
- 2 fixing screws

Note

Refer to page 20–21 for further information.

Roto Swing rosette and handle outside – rosette and handle inside

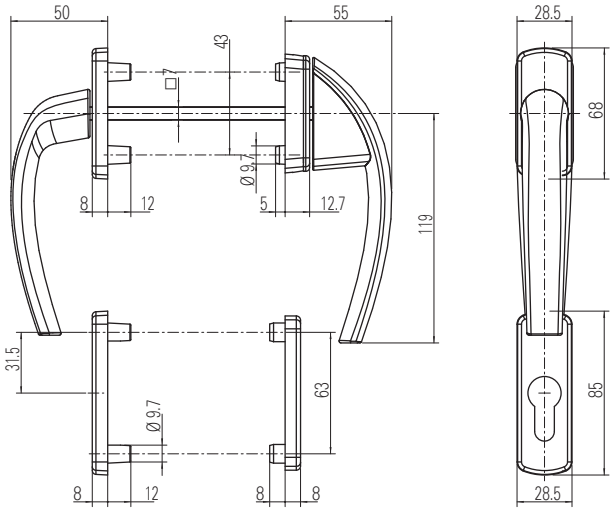

Parts list

Colour Design element | Cover | Rosette							№
Spindle length 100							
Silver Silver grey | Silver grey | Silver grey	R01.1		M5X100	100		1	607332
Titanium Grey | Grey | Grey	R01.3		M5X100	100		1	607333
Traffic white Traffic white | Traffic white | Traffic white	R07.2		M5X100	100		1	607331
Spindle length 127							
Silver Silver grey | Silver grey | Silver grey	R01.1		M5X110	127		1	606786
Titanium Grey | Grey | Grey	R01.3		M5X110	127		1	606787
Traffic white Traffic white | Traffic white | Traffic white	R07.2		M5X110	127		1	606785

Product description

- Handle range with elements designed in different colours

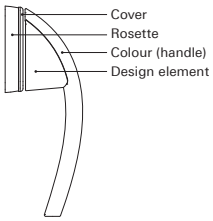

- Handle set with rosette version
- Outside handle fix connected
- Standard handle with PC rosette outside and inside
- Concealed screw fixing
- 90-degree lock-in position
- 10-year functional warranty
-
-

Scope of delivery

- 2 window handles
- 2 PC rosettes
- 4 fixing screws

Note

Profile cylinder not included in delivery scope.
For the use with aluminium profiles, a flush-encased gearbox is required (see page 80–81).

Roto Swing rosette and flat handle outside – rosette and handle inside

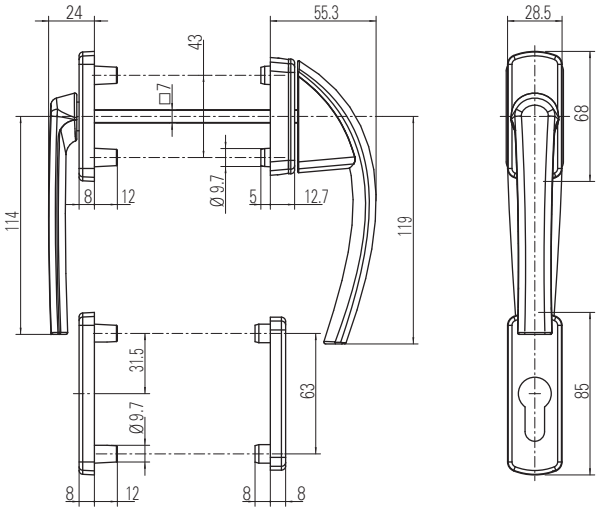

Parts list

Colour Design element | Cover | Rosette							№
Spindle length 100							
Silver Silver grey | Silver grey | Silver grey	R01.1		M5X100	100		1	607335
Titanium Grey | Grey | Grey	R01.3		M5X100	100		1	607336
Traffic white Traffic white | Traffic white | Traffic white	R07.2		M5X100	100		1	607334
Spindle length 127							
Silver Silver grey | Silver grey | Silver grey	R01.1		M5X110	127		1	606789
Titanium Grey | Grey | Grey	R01.3		M5X110	127		1	606790
Traffic white Traffic white | Traffic white | Traffic white	R07.2		M5X110	127		1	606788

Product description

- Handle range with elements designed in different colours

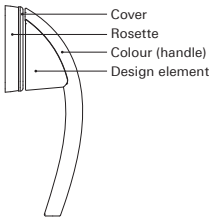

- Handle set with rosette version
- Outside handle fix connected
- Short-necked handle with PC rosette outside
- Standard handle with PC rosette inside
- Concealed screw fixing
- 90-degree lock-in position
- 10-year functional warranty
-
-

Scope of delivery

- 2 window handles
- 2 PC rosettes
- 4 fixing screws

Note

Profile cylinder not included in delivery scope.

Roto Swing long-plate and handle outside – rosette and handle inside

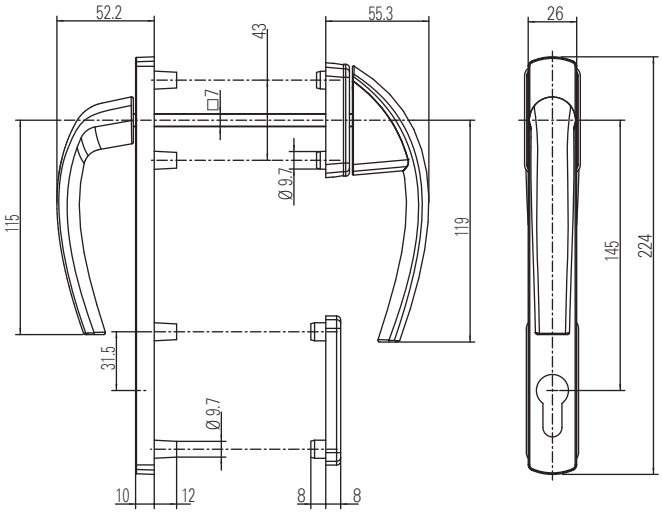

Parts list

Colour Design element | Cover | Rosette							№
Spindle length 100							
Silver Silver grey | Silver grey | Silver grey	R01.1		M5X100	100		1	607326
Titanium Grey | Grey | Grey	R01.3		M5X100	100		1	606796
Traffic white Traffic white | Traffic white | Traffic white	R07.2		M5X100	100		1	606794
Spindle length 127							
Silver Silver grey | Silver grey | Silver grey	R01.1		M5X110	127		1	606792
Titanium Grey | Grey | Grey	R01.3		M5X110	127		1	606793
Traffic white Traffic white | Traffic white | Traffic white	R07.2		M5X110	127		1	606791

Product description

- Handle range with elements designed in different colours

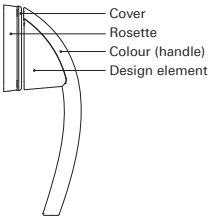

- Handle set with rosette/long-plate version
- Outside handle fix connected
- Long-plate and standard handle outside
- Standard handle with PC rosette inside
- Concealed screw fixing
- 90-degree lock-in position
- 10-year functional warranty
-
-

Scope of delivery

- 2 window handles
- 2 PC rosettes
- 4 fixing screws

Note

Profile cylinder not included in delivery scope.

Roto Swing long-plate and flat handle outside – rosette and handle inside

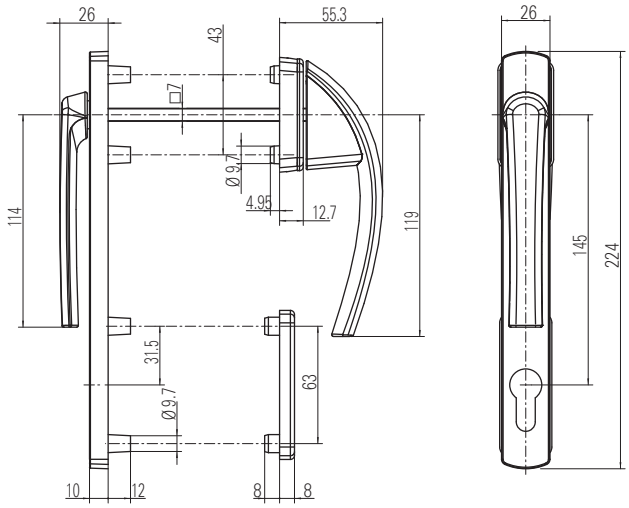

Parts list

Colour Design element | Cover | Rosette							№
Spindle length 100							
Silver Silver grey | Silver grey | Silver grey	R01.1		M5X100	100		1	607329
Titanium Grey | Grey | Grey	R01.3		M5X100	100		1	607330
Traffic white Traffic white | Traffic white | Traffic white	R07.2		M5X100	100		1	607328

Product description

- Handle range with elements designed in different colours

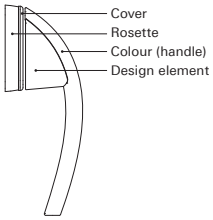

- Handle set with continuous angular-shaped long-plate outside
- Outside handle fix connected
- Short-necked handle with angular-shaped long-plate outside
- Standard handle with PC rosette inside
- Concealed screw fixing
- 90-degree lock-in position
- 10-year functional warranty
-
-

Scope of delivery

- 2 window handles
- 2 PC rosettes
- 4 fixing screws

Note

Profile cylinder not included in delivery scope.

Roto Swing Patio S

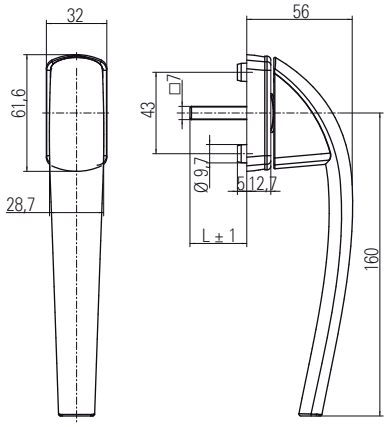

Parts list

Colour							№
Spindle length 35							
Silver	R01.1		-	35		15	619714
Medium bronze	R05.3		-	35		15	619725
Traffic white	R07.2		-	35		15	619726
Spindle length 40							
Silver	R01.1		-	40		15	619727
Medium bronze	R05.3		-	40		15	619728
Traffic white	R07.2		-	40		15	619729
Spindle length 43							
Silver	R01.1		-	43		15	619730
Titanium	R01.3		-	43		15	729278
Medium bronze	R05.3		-	43		15	619731
Traffic white	R07.2		-	43		15	619732

Product description

- Handle range with elements designed in different colours

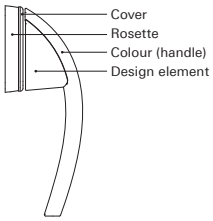

- Basic handle without additional functions
- 90-degree lock-in position
- Classification according to DIN EN 13126-3, see page 17, table 1
- 10-year functional warranty
-
-

Scope of delivery

- 1 window handle

Roto Swing Patio S, lockable 100 Nm

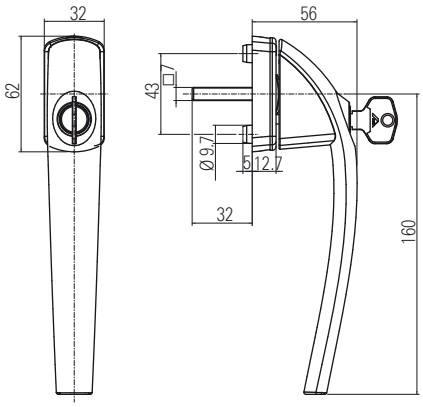

Parts list

Colour							Nº
Spindle length 35							
Silver	R01.1		-	35		15	619733
Medium bronze	R05.3		-	35		15	619734
Traffic white	R07.2		-	35		15	619735
Spindle length 40							
Silver	R01.1		-	40		15	619736
Medium bronze	R05.3		-	40		15	619737
Traffic white	R07.2		-	40		15	619738
Spindle length 43							
Silver	R01.1		-	43		15	619739
Medium bronze	R05.3		-	43		15	619740
Traffic white	R07.2		-	43		15	619741

Product description

- Handle design with elements in different colours

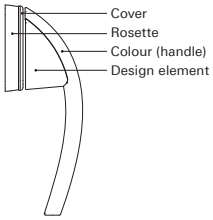

- Lockable handle with tested torque of 100 Nm
- Locking: Push cylinder with turn-key
- Simple and quick locking by pushing down the cylinder
- Meets the requirements of DIN EN 1627-1630, RC1 – RC6
- 90-degree lock-in position
- Classification according to DIN EN 13126-3, see page 17, table 3
- 10-year functional warranty
-
-

Scope of delivery

- 1 window handle with key

Roto Swing Patio Z Standard

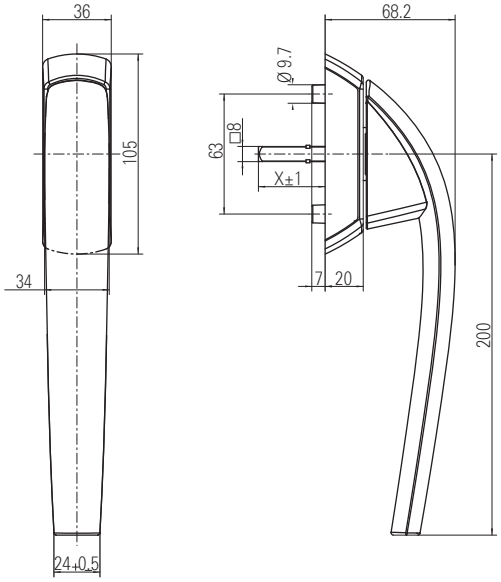

Parts list

Colour							№
Spindle length 35							
Silver	R01.1		M5x50	35		1	619664
Medium bronze	R05.3		M5x50	35		1	619665
Traffic white	R07.2		M5x50	35		1	619666
Spindle length 40							
Silver	R01.1		M5x55	40		1	619677
Medium bronze	R05.3		M5x55	40		1	619678
Traffic white	R07.2		M5x55	40		1	619679
Spindle length 43							
Silver	R01.1		M5x60	43		1	619680
Medium bronze	R05.3		M5x60	43		1	619681
Dark bronze	R05.4		M5x60	43		1	639484
Bronze	R05.5		M5x60	43		1	633134
Traffic white	R07.2		M5x60	43		1	619682

Product description

- Handle range with elements designed in different colours

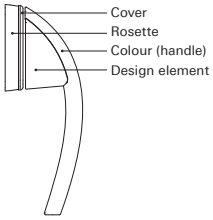

- Basic handle without additional functions
- 90/127-degree lock-in position
- 10-year functional warranty
-
-

Scope of delivery

- 1 window handle
- 2 fixing screws

Roto Swing Patio Z, lockable – 40 Nm

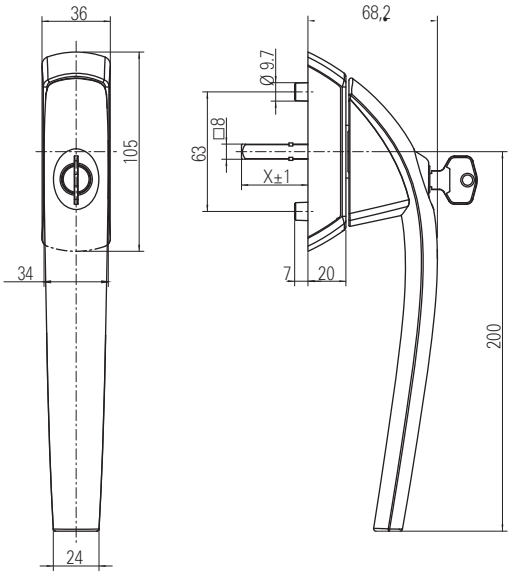

Parts list

Colour							Nº
Spindle length 35							
Silver	R01.1		M5x50	35		1	619683
Medium bronze	R05.3		M5x50	35		1	619684
Traffic white	R07.2		M5x50	35		1	619715
Spindle length 40							
Silver	R01.1		M5x55	40		1	619716
Medium bronze	R05.3		M5x55	40		1	619717
Traffic white	R07.2		M5x55	40		1	619718
Spindle length 43							
Silver	R01.1		M5x60	43		1	619719
Medium bronze	R05.3		M5x60	43		1	619720
Dark bronze	R05.4		M5x60	43		1	639545
Bronze	R05.5		M5x60	43		1	633185
Traffic white	R07.2		M5x60	43		1	619721

Product description

- Handle design with elements in different colours

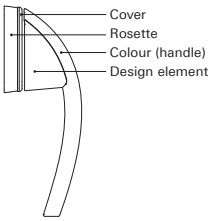

- Lockable handle with tested torque of 40 Nm
- Locking: Push cylinder with turn-key
- For locking and unlocking
- operable if handle is unlocked
- 90/127-degree lock-in position
- 10-year functional warranty
-
-

Scope of delivery

- 1 window handle
- 1 key
- 2 fixing screws

Roto Swing Patio Z door handle set for inside and outside operation

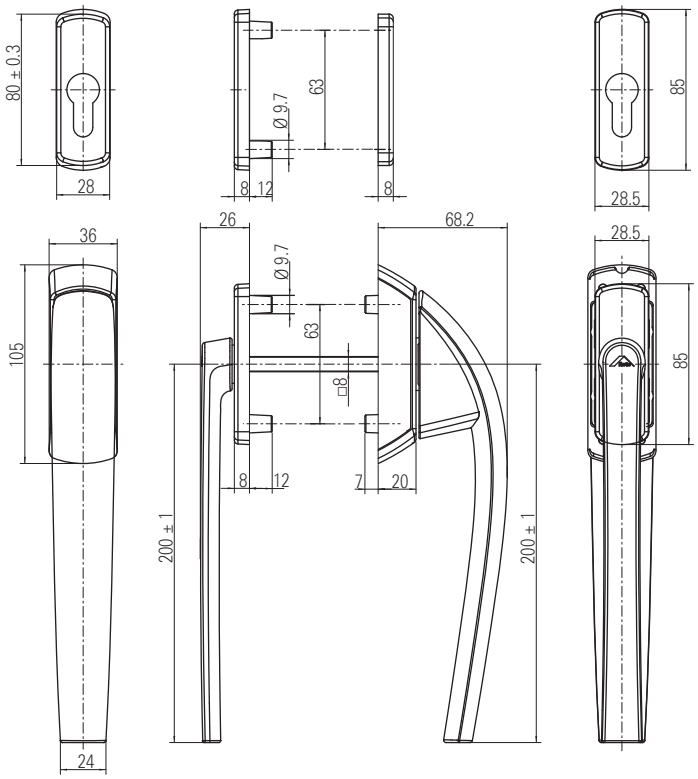

Parts list

Colour							Nº
Spindle length 135							
Silver	R01.1		M5x110	135		1	619722
Medium bronze	R05.3		M5x110	135		1	619723
Traffic white	R07.2		M5x110	135		1	619724

Product description

- Handle range with elements designed in different colours

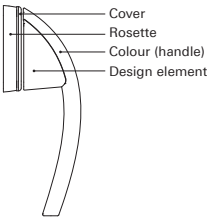

- Basic handle without additional functions
- 90/127-degree lock-in position
- 10-year functional warranty
-
-

Scope of delivery

- 1 window handle inside
- 1 flat handle outside
- 2 cylinder rosettes
- 4 fixing screws

Roto Swing Patio Life Standard

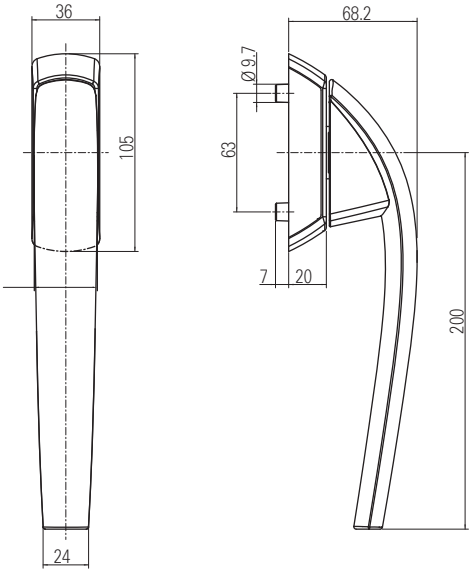

Parts list

Colour							
Spindle length 150							
Silver	R01.1		M5x110	150		1	619642
Medium bronze	R05.3		M5x110	150		1	619643
Traffic white	R07.2		M5x110	150		1	619644

Product description

- Handle range with elements designed in different colours

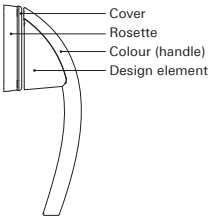

- Basic handle without additional functions
- 90-degree lock-in position
- 10-year functional warranty
-
-

Scope of delivery

- 1 window handle
- 2 fixing screws

Roto Swing Patio Life lockable – 40 Nm

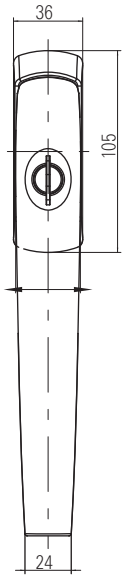

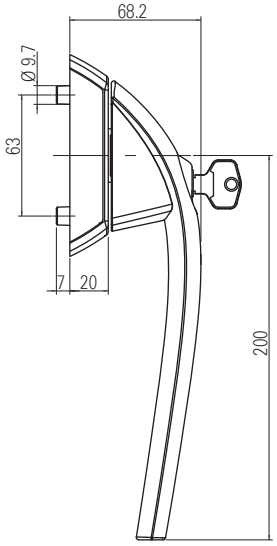

Parts list

Colour							№
Spindle length 150							
Silver	R01.1		M5x110	150		1	619655
Medium bronze	R05.3		M5x110	150		1	619656
Traffic white	R07.2		M5x110	150		1	619657

Product description

- Handle design with elements in different colours

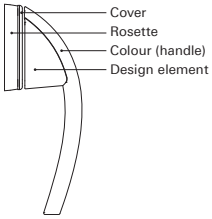

- Lockable handle with tested torque of 40 Nm
- Locking: Push cylinder with turn-key
- For locking and unlocking
- Operable if handle is unlocked
- 90-degree lock-in position
- 10-year functional warranty
-
-

Scope of delivery

- 1 window handle
- 1 key
- 2 fixing screws

Roto Swing Patio Life Half set

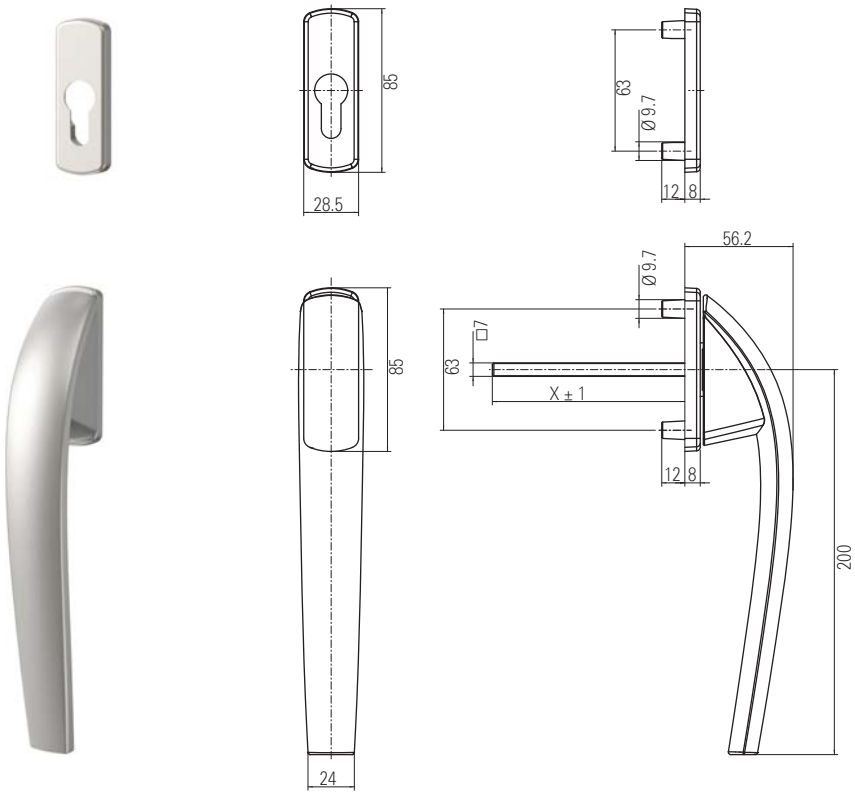

Parts list

Colour							Nº
Spindle length 150							
Silver	R01.1		M5x110	150		10	619658
Medium bronze	R05.3		M5x110	150		10	619659
Traffic white	R07.2		M5x110	150		10	619660

Product description

- Handle range with elements designed in different colours

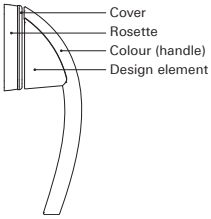

- Basic handle without additional functions
- Screws can be shortened
- 90-degree lock-in position
- 10-year functional warranty
-
-

Scope of delivery

- 1 window handle
- 1 profile cylinder rosette
- 2 fixing screws

Roto Swing Patio Life profile cylinder rosette inside

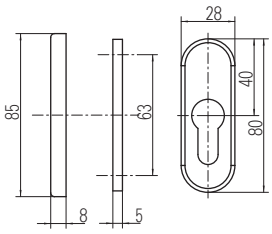

Parts list

Colour							
Spindle length 43							
Silver	R01.1	-	-	43		10	619661
Medium bronze	R05.3	-	-	43		10	619662
Traffic white	R07.2	-	-	43		10	619663

Product description

-
-

Scope of delivery

- 1 profile cylinder rosette

Roto Line
The classic range of handles

Roto Line is classic design in its most attractive form

The combination of harmonious clear lines with high-quality aluminium elements ensures comfortable handle operation.

Roto

Roto Line Standard

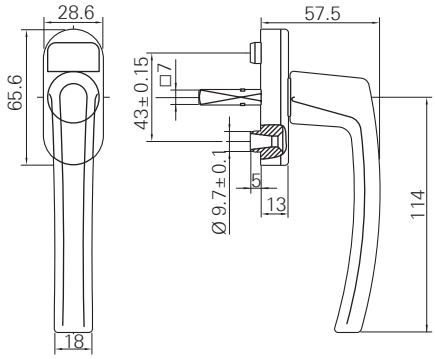

Parts list

Colour							№
Spindle length 24							
Silver	R01.1	-	-	24		20	262466
Jet black	R06.2	Roto	M5X35	24		20	490546
Traffic white	R07.2	Roto	M5X35	24		20	490545
Spindle length 30							
Silver	R01.1	Roto	-	30		20	227897
		-	-	30		20	228079
Nickel silver	R01.2	Roto	-	30		20	227899
		-	-	30		20	228081
Titanium	R01.3	Roto	-	30		20	227781
		-	M5X40	30		20	339532
		-	-	30		20	227982
Brass, matt	R03.1	Roto	-	30		20	227901
		-	M5X40	30		20	482543
Brass, polished	R03.2	Roto	-	30		20	227784
Medium bronze	R05.3	Roto	-	30		20	227903
Grey brown	R04.1	-	M5X40	30		20	482542
		-	-	30		20	227986
Medium bronze	R05.3	-	-	30		20	228086
Bronze	R05.5	Roto	-	30		20	227905
		-	-	30		20	228088
Traffic white	R07.2	Roto	-	30		20	227790
		-	M5X40	30		20	228176
		-	-	30		20	227990

Product description

- Basic handle without additional functions
- 90-degree lock-in position
- Classification according to DIN EN 13126-3, see page 17, table 1
- 10-year functional warranty
-
-

Scope of delivery

- 1 window handle
- Fixing screws, see table

Note:

For the use with aluminium profiles, a flush-encased gearbox is required (see page 78–79).

Colour							№
Spindle length 32							
Silver	R01.1	-	M5X40	32		20	618706
		-	-	32		20	258803
Titanium	R01.3	-	M5X40	32		20	618708
Brass, polished	R03.2	-	-	32		20	245628
Medium bronze	R05.3	-	M5X40	32		20	618707
Traffic white	R07.2	-	M5X40	32		20	618709
		-	-	32		20	258534
Spindle length 35							
Silver	R01.1		-	35		20	227907
		-	M5X45	35		20	280398
		-	-	35		20	228090
Nickel silver	R01.2		-	35		20	227909
		-	M5X45	35		20	263704
		-	-	35		20	228092
Titanium	R01.3		-	35		20	227796
		-	M5X45	35		20	255369
		-	-	35		20	227996
Brass, matt	R03.1		-	35		20	227911
		-	-	35		20	228094
Brass, polished	R03.2		-	35		20	227801
Grey brown	R04.1		-	35		20	227803
		-	M5X45	35		20	256230
		-	-	35		20	228000
Medium bronze	R05.3		-	35		20	227913
		-	M5X45	35		20	348329
		-	-	35		20	228096
Bronze	R05.5		-	35		20	227915
		-	-	35		20	228098
Pure white	R07.1		-	35		20	227806
Traffic white	R07.2		-	35		20	227808
			M5X45	35		20	256756
		-	M5X45	35		20	256755
		-	-	35		20	228004
Cream white	R07.3		-	35		20	227810
		-	-	35		20	341745
Spindle length 37							
Silver	R01.1	-	M5X45	37		20	384342
Titanium	R01.3	-	M5X45	37		20	384344
Medium bronze	R05.3	-	M5X45	37		20	618710
Traffic white	R07.2	-	M5X45	37		20	386267

Colour							№
Spindle length 40							
Silver	R01.1	-	M5X50	40		20	623132
		-	-	40		20	348375
Titanium	R01.3		-	40		20	262935
		-	M5X50	40		20	330870
Brass, matt	R03.1	-	-	40		20	349653
Grey brown	R04.1	-	M5X50	40		20	330867
		-	-	40		20	349654
Medium bronze	R05.3	-	-	40		20	364502
Jet black, matt	R06.2M	-	-	40		20	492148
Traffic white	R07.2	-	M5X50	40		20	623133
		-	-	40		20	263658
Cream white	R07.3	-	-	40		20	349652
Spindle length 43							
Silver	R01.1		-	43		20	571692
		-	M5X50	43		20	594323
		-	M5X55	43		20	618711
Nickel silver	R01.2		-	43		20	571693
Titanium	R01.3		-	43		20	571694
		-	M5X50	43		20	594325
		-	M5X55	43		20	618713
Brass, matt	R03.1		-	43		20	572415
Brass, polished	R03.2		-	43		20	572420
Grey brown	R04.1		-	43		20	572416
		-	M5X50	43		20	594327
Medium bronze	R05.3		-	43		20	572417
		-	M5X55	43		20	618712
Bronze	R05.5		-	43		20	572418
Traffic white	R07.2		-	43		20	572419
		-	M5X50	43		20	594330
		-	M5X55	43		20	618739
Spindle length 45							
Silver	R01.1	-	-	45		20	347442
Traffic white	R07.2	-	M5X55	45		20	256232
Traffic white	R07.2	-	-	45		20	287828
Spindle length 55							
Silver	R01.1	-	-	55		20	490557
Medium bronze	R05.3	-	-	55		20	490558
Traffic white	R07.2	-	-	55		20	490559

Roto Line Standard for night ventilation

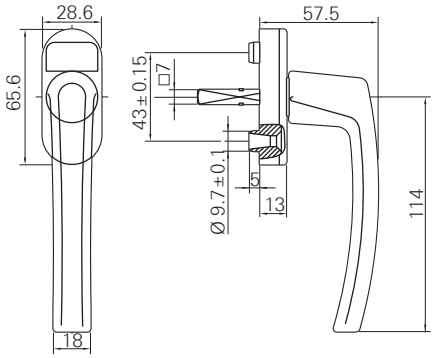

Parts list

Colour							№
Spindle length 30							
Silver	R01.1		-	30		20	339455
Nickel silver	R01.2		-	30		20	339456
Titanium	R01.3		-	30		20	339457
Brass, matt	R03.1		-	30		20	339458
Grey brown	R04.1		-	30		20	339459
Medium bronze	R05.3		-	30		20	339460
Bronze	R05.5		-	30		20	339461
Traffic white	R07.2		-	30		20	227895
Spindle length 32							
Silver	R01.1	-	-	32		20	228145
Titanium	R01.3	-	-	32		20	228061
Brass, matt	R03.1	-	-	32		20	228147
Spindle length 35							
Silver	R01.1		-	35		20	339462
Nickel silver	R01.2		-	35		20	339463
Titanium	R01.3		-	35		20	339474
Brass, matt	R03.1		-	35		20	339475
Grey brown	R04.1		-	35		20	339476
Medium bronze	R05.3		-	35		20	339477
Bronze	R05.5		-	35		20	339478
			M5X45	35		20	551933
Traffic white	R07.2		-	35		20	339479
			M5X45	35		20	551934

Product description

- Basic handle
- 90-degree lock-in position, 45-degree lock-in position for night ventilation
- Classification according to DIN EN 13126-3, see page 17, table 1
- 10-year functional warranty
-
-

Scope of delivery

- 1 window handle
- Fixing screws, see table

Note

For the use with aluminium profiles, a flush-encased gearbox is required (see page 80–81).

Colour							№
Spindle length 37							
Silver	R01.1	-		37			373935
Nickel silver	R01.2	-		37			488272
Titanium	R01.3	-	M5X45	37			524319
		-		37			373936
Brass, matt	R03.1	-		37			373938
Medium bronze	R05.3	-		37			488270
Bronze	R05.5	-		37			488271
Traffic white	R07.2	-		37			373942
Cream white	R07.3	-	M5X45	37			524367
		-		37			373944
Spindle length 40							
Silver	R01.1			40			473235
		-		40			373945
Nickel silver	R01.2			40			473236
Titanium	R01.3			40			473237
Brass, matt	R03.1			40			473238
Brass, polished	R03.2			40			473239
Grey brown	R04.1			40			473240
		-		40			373948
Medium bronze	R05.3			40			473241
Bronze	R05.5			40			473242
Traffic white	R07.2			40			473243
		-		40			373949
Cream white	R07.3	-		40			373950

Roto Line Secustik®

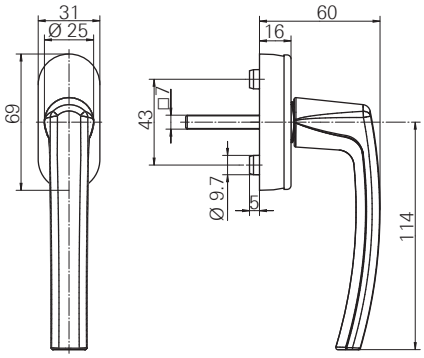

Parts list

Colour							№
Spindle length 24							
Silver	R01.1			24		20	603664
Titanium	R01.3			24		20	498746
Jet black, matt	R06.2M			24		20	603665
Pure white	R07.1			24		20	603666
Spindle length 32							
Silver	R01.1	-	M5X45	32		20	618714
		-	-	32		20	351756
Nickel silver	R01.2	-	-	32		20	351757
Titanium	R01.3	-	M5X45	32		20	618736
		-	-	32		20	351758
Grey brown	R04.1	-	-	32		20	351759
Medium bronze	R05.3	-	M5X45	32		20	618735
		-	-	32		20	351760
Bronze	R05.5	-	M5X45	32		20	623781
		-	-	32		20	351761
Jet black, matt	R06.2M	-	-	32		20	494014
Traffic white	R07.2	-	M5X45	32		20	618737
		-	-	32		20	351763
Spindle length 35							
Titanium	R01.3			35		20	627467
Brass, matt	R03.1			35		20	627463
Black brown	R04.4			35		20	627465
Traffic white	R07.2			35		20	627468

Product description

- Handle with automatic locking
- Security against manipulation from outside
- 90-degree lock-in position
- Classification according to DIN EN 13126-3, see page 17, table 2
- 10-year functional warranty
-
-

Scope of delivery

- 1 window handle
- Fixing screws, see table

Note

Refer to page 19 for further information.
For the use with aluminium profiles, a flush-encased gearbox is required (see page 80–81).

Colour							№
Spindle length 37							
Silver	R01.1	Roto		37		20	498752
		-	M5X45	37		20	384419
		-	M5X50	37		20	570401
		-	-	37		20	351737
Nickel silver	R01.2	-	-	37		20	351738
Titanium	R01.3	Roto	-	37		20	498753
		-	M5X45	37		20	384439
		-	M5X50	37		20	487658
		-	-	37		20	351739
Grey brown	R04.1	-	M5X50	37		20	570402
		-	-	37		20	351740
Brass, matt	R03.1	-	M5X50	37		20	629478
Medium bronze	R05.3	-	M5X50	37		20	618738
		-	-	37		20	351741
Bronze	R05.5	-	-	37		20	351742
Traffic white	R07.2	-	M5X45	37		20	384421
		-	M5X50	37		20	487657
		-	-	37		20	351744
Spindle length 40							
Silver	R01.1	Roto	-	40		20	627460
		-	-	40		20	363584
Nickel silver	R01.2	Roto	-	40		20	627456
		-	-	40		20	363615
Titanium	R01.3	Roto	-	40		20	627458
		-	M5X55	40		20	566531
Brass, matt	R03.1	Roto	-	40		20	627455
Grey brown	R04.1	Roto	-	40		20	498769
		-	-	40		20	363617
Black brown	R04.4	Roto	-	40		20	627457
Bronze	R05.5	Roto	-	40		20	627454
		-	-	40		20	363619
Traffic white	R07.2	Roto	-	40		20	498770
		-	M5X55	40		20	566530
		-	-	40		20	363621
Cream white	R07.3	Roto	-	40		20	498771
Spindle length 43							
Silver	R01.1	-	M5X55	43		20	594331
Titanium	R01.3	-	M5X55	43		20	594333
Brass, matt	R03.1	-	M5X55	43		20	594334
Grey brown	R04.1	-	M5X55	43		20	594335
Medium bronze	R05.3	-	M5X55	43		20	594336
Bronze	R05.5	-	M5X55	43		20	594337
Traffic white	R07.2	-	M5X55	43		20	594338

Roto Line Secustik® for night ventilation

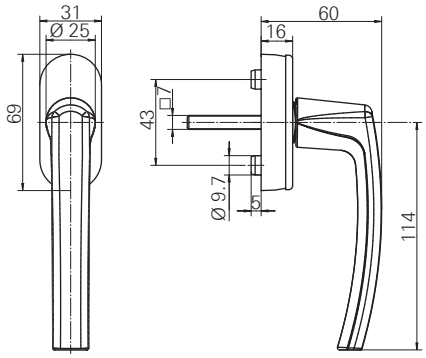

Parts list

Colour							№
Spindle length 32							
Silver	R01.1			32		20	374117
Nickel silver	R01.2			32		20	374118
Titanium	R01.3			32		20	374119
Medium bronze	R05.3			32		20	374121
Bronze	R05.5			32		20	374122
Traffic white	R07.2			32		20	374123

Product description

- Handle with automatic locking
- Security against manipulation from outside
- 90-degree lock-in position, 45-degree lock-in position for night ventilation
- Classification according to DIN EN 13126-3, see page 17, table 2
- 10-year functional warranty
-
-

Scope of delivery

- 1 window handle
- Fixing screws, see table

Note

Refer to page 19 for further information.
For the use with aluminium profiles, a flush-encased gearbox is required (see page 80–81).

Roto Line, lockable – 40 Nm

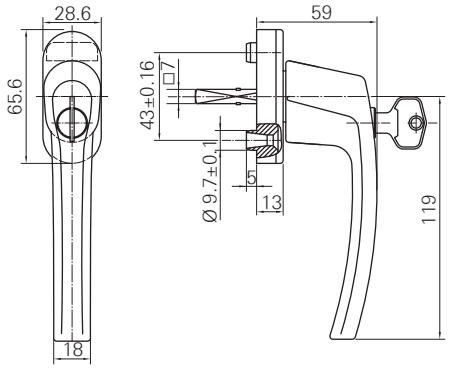

Parts list

Colour								№
Spindle length 24								
Silver	R01.1		-	-	24		20	610560
Spindle length 30								
Silver	R01.1		-	-	30		20	227962
		-	-	-	30		20	228125
Nickel silver	R01.2	-	-	-	30		20	228126
Titanium	R01.3		-	-	30		20	227863
		-	-	-	30		20	228035
Brass, matt	R03.1		-	-	30		20	227964
Medium bronze	R05.3		-	-	30		20	227965
Bronze	R05.5		-	-	30		20	227966
Traffic white	R07.2		-	-	30		20	227868
		-	-	-	30		20	228039
Spindle length 32								
Silver	R01.1	-	-	M5X40	32		20	618768
Titanium	R01.3	-	-	M5X40	32		20	618770
Medium bronze	R05.3	-	-	M5X40	32		20	618769
Traffic white	R07.2	-	-	M5X40	32		20	618771

Product description

- Lockable handle with tested torque of 40 Nm
- Locking: Push cylinder with turn-key
- For locking and unlocking
- Operable if handle is unlocked
- 90-degree lock-in position
- Classification according to DIN EN 13126-3, see page 17, table 3
- 10-year functional warranty
-
-

Scope of delivery

- 1 window handle
- 1 key
- Fixing screws, see table

Note

For the use with aluminium profiles, a flush-encased gearbox is required (see page 80–81).

Colour								№
Spindle length 35								
Silver	R01.1		-	-	35		20	227967
		-	-	M5X45	35		20	280399
		-	-	-	35		20	228130
Nickel silver	R01.2	-	-	-	35		20	228131
Titanium	R01.3		-	-	35		20	227871
		-	-	-	35		20	228040
Brass, matt	R03.1	-	-	-	35		20	228132
Grey brown	R04.1	-	-	-	35		20	228042
Medium bronze	R05.3		-	-	35		20	227970
		-	-	-	35		20	228133
Bronze	R05.5	-	-	-	35		20	228134
Pure white	R07.1	-	-	-	35		20	228043
Traffic white	R07.2		-	-	35		20	227876
		-	-	M5X45	35		20	246638
		-	-	-	35		20	228044
Cream white	R07.3	-	-	-	35		20	377606
Spindle length 37								
Silver	R01.1	-	-	M5X45	37		20	384395
Titanium	R01.3	-	-	M5X45	37		20	384438
		-		M5X45	37		20	524345
Brass, matt	R03.1			M5X40	37		20	524346
Medium bronze	R05.3	-	-	M5X45	37		20	618772
Bronze	R05.5			M5X40	37		20	524348
Traffic white	R07.2	-	-	M5X45	37		20	384397
Cream white	R07.3			M5X45	37		20	524350
Spindle length 40								
Silver	R01.1	-	-	M5X50	40		20	352026
Titanium	R01.3	-	-	-	40		20	377607
Grey brown	R04.1	-	-	-	40		20	377609
Traffic white	R07.2	-	-	M5X50	40		20	331006
		-	-	M5X55	40		20	566528
Cream white	R07.3	-	-	-	40		20	377610
Spindle length 43								
Silver	R01.1	-	-	M5X50	43		20	594339
		-	-	M5X55	43		20	618774
Titanium	R01.3	-	-	M5X50	43		20	594341
		-	-	M5X55	43		20	618786
Medium bronze	R05.3	-	-	M5X55	43		20	618785
Bronze	R05.5	-	-	M5X50	43		20	594345
Traffic white	R07.2	-	-	M5X50	43		20	594346
		-	-	M5X55	43		20	618787

Roto Line, lockable – 100 Nm

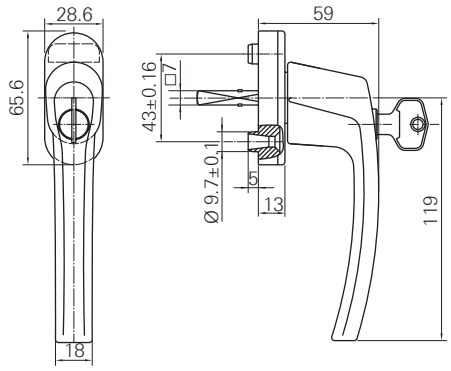

Parts list

Colour		Roto	SKG					№
Spindle length 30								
Silver	R01.1	-	-	-	30		20	333964
Traffic white	R07.2	-	-	-	30		20	333972
Spindle length 32								
Silver	R01.1			-	32		20	490644
		-	-	M5X40	32		20	618788
Titanium	R01.3	-	-	M5X40	32		20	618790
Medium bronze	R05.3	-	-	M5X40	32		20	618789
Traffic white	R07.2	-	-	M5X40	32		20	618791
Spindle length 35								
Silver	R01.1		-	-	35		20	333973
		-	-	M5X45	35		20	347561
		-	-	-	35		20	333983
Nickel silver	R01.2	-	-	-	35		20	333984
Titanium	R01.3	-	-	-	35		20	333985
Brass, matt	R03.1	-	-	-	35		20	333986
Grey brown	R04.1	-	-	-	35		20	333987
Medium bronze	R05.3	-	-	-	35		20	333988
Bronze	R05.5	-	-	-	35		20	333989
Pure white	R07.1	-	-	-	35		20	333990
Traffic white	R07.2	-	-	M5X45	35		20	347563
		-	-	-	35		20	333991

Product description

- Lockable handle with tested torque of 100 Nm
- Locking: Push cylinder with turn-key
- Simple and quick locking by pushing down the cylinder
- Meets the requirements of DIN EN 1627-1630, RC1 – RC6
- 90-degree lock-in position
- Classification according to DIN EN 13126-3, see page 17, table 4
- 10-year functional warranty
-
-

Scope of delivery

- 1 window handle
- 1 key
- Fixing screws, see table

Note

Refer to page 18 for further information.
For the use with aluminium profiles, a flush-encased gearbox is required (see page 80–81).

Colour								№
Spindle length 37								
Silver	R01.1			-	37		20	490648
		-	-	M5X45	37		20	384422
Titanium	R01.3			-	37		20	490649
		-	-	M5X45	37		20	385078
Medium bronze	R05.3	-	-	M5X45	37		20	618792
Bronze	R05.5	-	-	M5X45	37		20	624451
Traffic white	R07.2	-	-	M5X45	37		20	384424
Spindle length 40								
Silver	R01.1			-	40		20	490653
		-	-	M5X50	40		20	623134
		-	-	-	40		20	355804
Titanium	R01.3	-	-	M5X50	40		20	331004
Grey brown	R04.1	-	-	M5X50	40		20	623176
Traffic white	R07.2			-	40		20	490656
		-	-	M5X50	40		20	623175
		-	-	-	40		20	355806
Cream white	R07.3			-	40		20	490657
Spindle length 43								
Silver	R01.1		-	-	43		20	572421
		-	-	M5X50	43		20	594347
		-	-	M5X55	43		20	618793
Nickel silver	R01.2		-	-	43		20	572422
Titanium	R01.3		-	-	43		20	572423
		-	-	M5X55	43		20	618805
Brass, matt	R03.1		-	-	43		20	572424
Medium bronze	R05.3		-	-	43		20	572427
		-	-	M5X55	43		20	618794
Bronze	R05.5		-	-	43		20	572428
Traffic white	R07.2		-	-	43		20	572429
		-	-	M5X50	43		20	594354
		-	-	M5X55	43		20	618806
Spindle length 45								
Silver	R01.1	-	-	-	45		20	347507
Traffic white	R07.2	-	-	-	45		20	347505

Roto Line, lockable – 200 Nm

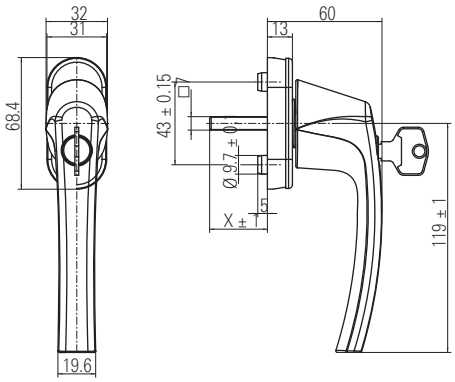

Parts list

Colour							№
Spindle length 30							
Silver	R01.1		-	30		15	227942
Medium bronze	R05.3		-	30		15	227945
Bronze	R05.5		-	30		15	227946
Spindle length 35							
Silver	R01.1		-	35		15	227947
Titanium	R01.3		-	35		15	227840
Brass	R03.1		-	35		15	227949
Medium bronze	R05.3		-	35		15	227950
Bronze	R05.5		-	35		15	227951
Traffic white	R07.2		-	35		15	227844

Product description

- Lockable handle with tested torque of 200 Nm
- Locking: Push cylinder with turn-key
- Simple and quick locking by pushing down the cylinder
- Meets the requirements of DIN EN 1627-1630, RC1 – RC6
- 90-degree lock-in position
- Classification according to DIN EN 13126-3, see page 17, table 5
- 10-year functional warranty
-
-

Scope of delivery

- 1 window handle
- 1 key
- Fixing screws, see table

Note

For the use with aluminium profiles, a flush-encased gearbox is required (see page 80–81).

Roto Line with push-button

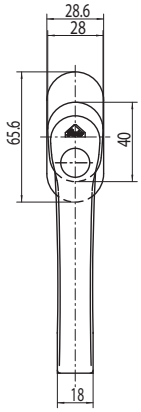

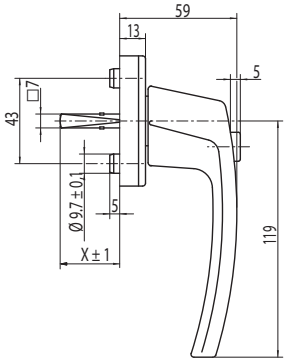

Parts list

Colour		Roto					№
Spindle length 30							
Silver	R01.1	-	-	30		20	228135
Titanium	R01.3	-	-	30		20	228045
Brass, matt	R03.1	-	-	30		20	228137
Traffic white	R07.2	-	-	30		20	228049
Spindle length 32							
Silver	R01.1	-	M5X40	32		20	618740
Titanium	R01.3	-	M5X40	32		20	618742
Medium bronze	R05.3	-	M5X40	32		20	618741
Traffic white	R07.2	-	M5X40	32		20	618807
Spindle length 35							
Silver	R01.1	-	-	35		20	228140
Titanium	R01.3	-	-	35		20	228050
Brass, matt	R03.1	-	-	35		20	228142
Grey brown	R04.1	-	-	35		20	228052
Medium bronze	R05.3	-	-	35		20	228143
Bronze	R05.5	-	-	35		20	228144
Traffic white	R07.2	-	-	35		20	228054
Spindle length 37							
Silver	R01.1	-	M5X45	37		20	384435
Titanium	R01.3	-	M5X45	37		20	385079
Medium bronze	R05.3	-	M5X45	37		20	618743
Traffic white	R07.2	-	M5X45	37		20	384437

Product description

- Window handle with push-button
- Push-button function enables locking and unlocking
- 90-degree lock-in position
- Classification according to DIN EN 13126-3, see page 17, table 6
- 10-year functional warranty
-
-

Scope of delivery

- 1 window handle
- Fixing screws, see table

Note

For the use with aluminium profiles, a flush-encased gearbox is required (see page 80–81).

Colour							№
Spindle length 43							
Silver	R01.1	-	M5X50	43		20	598416
		-	M5X55	43		20	618744
Titanium	R01.3	-	M5X55	43		20	618766
Medium bronze	R05.3	-	M5X55	43		20	618765
Bronze	R05.5	-	M5X50	43		20	598421
Traffic white	R07.2	-	M5X50	43		20	598422
		-	M5X55	43		20	618767
Spindle length 45							
Silver	R01.1	-	-	45		20	347487
Traffic white	R07.2	-	-	43		20	347485

Roto Line Tilt-First, lockable – 40 Nm

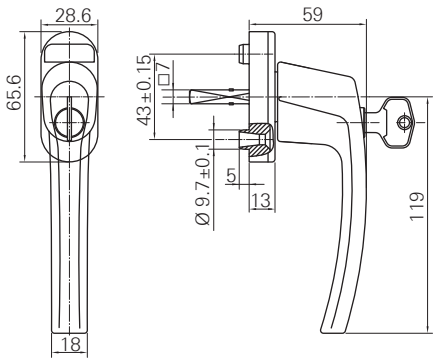

Parts list

Colour							№
Spindle length 32							
Silver	R01.1		-	32		20	335309
		-	M5X40	32		20	618808
Nickel silver	R01.2		-	32		20	335310
Titanium	R01.3		-	32		20	335314
		-	M5X40	32		20	618810
Brass, matt	R03.1		-	32		20	335311
Medium bronze	R05.3	-	M5X40	32		20	618809
Dark bronze	R05.4		-	32		20	335312
Traffic white	R07.2		-	32		20	335313
		-	M5X40	32		20	618811
Spindle length 37							
Silver	R01.1		-	37		20	347800
		-	M5X45	37		20	618812
Titanium	R01.3	-	M5X45	37		20	618814
Grey brown	R04.1		-	37		20	347801
Medium bronze	R05.3	-	M5X45	37		20	618813
Bronze	R05.5		-	37		20	494034
Traffic white	R07.2		-	37		20	347802
		-	M5X45	37		20	618815
Spindle length 40							
Silver	R01.1		-	40		20	377611
Titanium	R01.3		-	40		20	377612
Traffic white	R07.2		-	40		20	377615
Cream white	R07.3		-	40		20	377616

Product description

- Lockable handle with tested torque of 40 Nm
- For Tilt-First window operation (tilt before turn)
- Locking: Push cylinder with turn-key
- Lockable in 0-degree and 90-degree position
- 90-degree lock-in position
- Classification according to DIN EN 13126-3, see page 17, table 7
- 10-year functional warranty
-
-

Scope of delivery

- 1 window handle
- 1 key
- Fixing screws, see table

Note:

Refer to page 20–21 for further information.
For the use with aluminium profiles, a flush-encased gearbox is required (see page 80–81).

Colour							№
Spindle length 43							
Silver	R01.1	-	M5X50	43		20	594355
		-	M5X55	43		20	618816
Titanium	R01.3	-	M5X50	43		20	594357
		-	M5X55	43		20	618818
Medium bronze	R05.3	-	M5X55	43		20	618817
Traffic white	R07.2	-	M5X50	43		20	594362
		-	M5X55	43		20	618819

Roto Line service handle

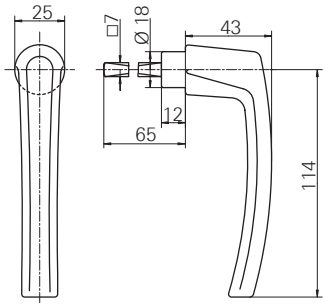

Parts list

Colour							№
Spindle length 53							
Traffic white	R07.2	-	-	53		20	257628

Product description

-
-

Scope of delivery

- 1 window handle

Note:

In conjunction with Roto Line service handle (see page 88).

Roto Line rosette for service handle

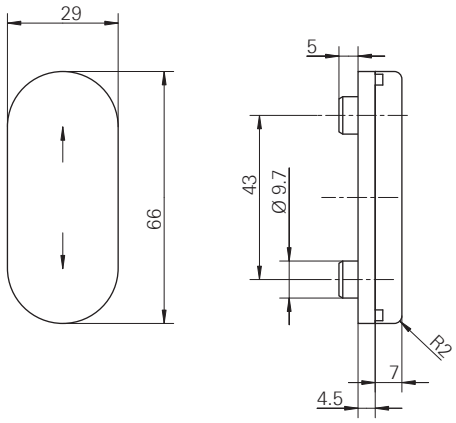

Parts list

Colour				№
Silver	R01.1		20	228100
Nickel silver	R01.2		20	228101
Titanium	R01.3		20	228010
Brass, matt	R03.1		20	228102
Grey brown	R04.1		20	228012
Medium bronze	R05.3		20	228103
Bronze	R05.5		20	228104
Traffic white	R07.2		20	228014

Product description

- Finger hole in escutcheon cover with vertically slidable cover
- In combination with Roto Line service handle

Roto Line Ring for escutcheonless handle

Parts list

Colour				№
Silver	R01.1		10	623476
Silver	R01.5		10	377979
Jet black	R06.2		10	377980
Traffic white	R07.2		10	377982
Dark bronze	R05.4		10	377983
Stainless-steel design	R03.4		10	619289
Special colour	SP COL		10	377984

Product description

- Aluminium ring rosette
- Can be combined with the escutcheonless window handles
- Colour-matched with Roto window handles

Mounting plate for escutcheonless handle

Parts list

Description				№
Mounting plate for escutcheonless handle	-	-	10	378134

Product description

- Mounting plate for attaching escutcheonless handles at aluminium profiles

Pull key for escutcheonless handle

Parts list

Description				№
Pull key for escutcheonless handle	-	-	10	377995

Product description

- Tool for dismounting the transport protection of the escutcheonless handle

Roto Line rosette and handle outside – rosette and handle inside

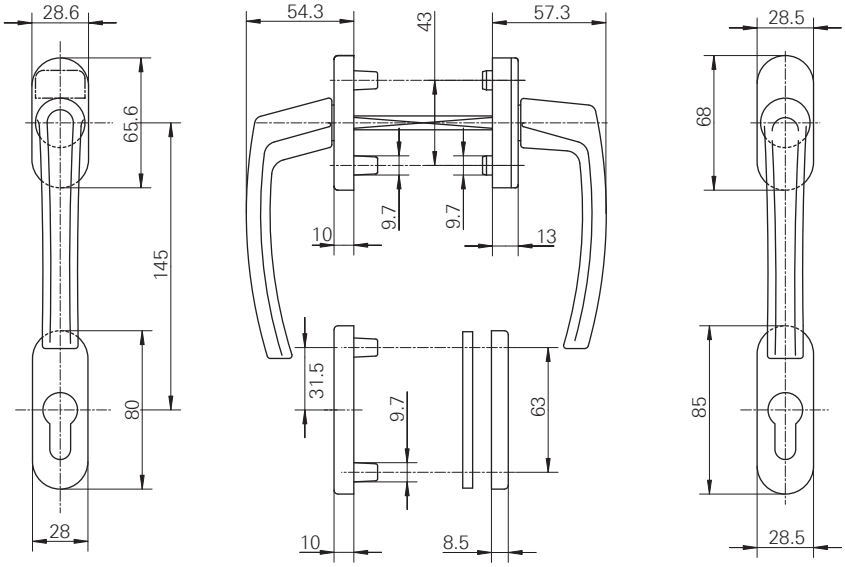

Parts list

Colour							№
Spindle length 100							
Silver	R01.1		M5X100	100		1	228292
		-	M5X100	100		1	228380
Nickel silver	R01.2		M5X100	100		1	228293
		-	M5X100	100		1	228381
Titanium	R01.3		M5X100	100		1	228233
		-	M5X100	100		1	228333
Brass, matt	R03.1		M5X100	100		1	228294
		-	M5X100	100		1	228382
Grey brown	R04.1		M5X100	100		1	228235
		-	M5X100	100		1	228335
Medium bronze	R05.3		M5X100	100		1	228295
Medium bronze	R05.3	-	M5X100	100		1	228383
Bronze	R05.5		M5X100	100		1	228296
		-	M5X100	100		1	228384
Pure white	R07.1		M5X100	100		1	228236
Pure white	R07.1	-	M5X100	100		1	228336
Traffic white	R07.2		M5X100	100		1	228237
Traffic white	R07.2	-	M5X100	100		1	228337
Spindle length 110							
Titanium	R01.3	-	M5X110	110		1	601706
Jet black, matt	R06.2M	-	M5X110	110		1	492151
Traffic white	R07.2	-	M5X110	110		1	601711
Spindle length 127							
Silver	R01.1	-	M5X110	127		1	601694

Product description

- Handle set with rosette version
- Outside handle fix connected
- Standard handle with PC rosette outside and inside
- Concealed screw fixing
- 90-degree lock-in position
- 10-year functional warranty
-
-

Scope of delivery

- 2 window handles
- 2 PC rosettes
- 4 fixing screws

Note

Profile cylinder not included in delivery scope.
For the use with aluminium profiles, a flush-encased gearbox is required (see page 80–81).

Roto Line rosette and flat handle outside – rosette and handle inside

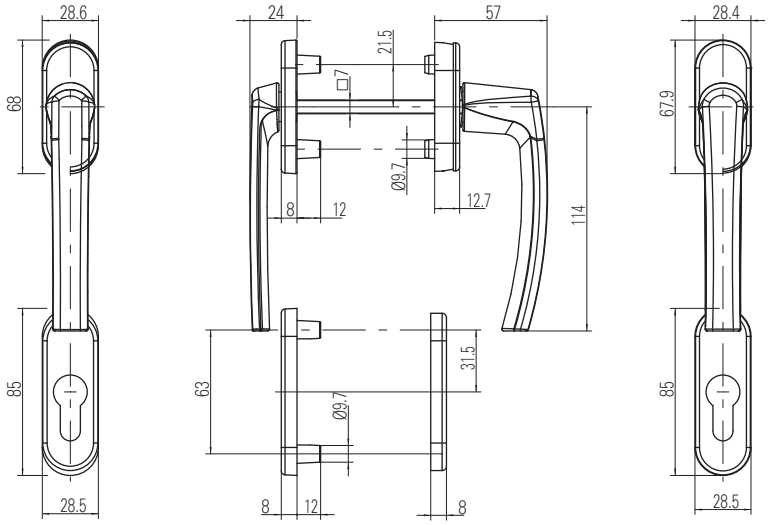

Parts list

Colour							№
Spindle length 100							
Silver	R01.1	Roto	M5X100	100		1	228302
		-	M5X100	100		1	228390
Nickel silver	R01.2	Roto	M5X100	100		1	228303
		-	M5X100	100		1	228391
Titanium	R01.3	Roto	M5X100	100		1	228245
		-	M5X100	100		1	228345
Brass, matt	R03.1	Roto	M5X100	100		1	228304
		-	M5X100	100		1	228392
Grey brown	R04.1	-	M5X100	100		1	228347
Medium bronze	R05.3	Roto	M5X100	100		1	228305
		-	M5X100	100		1	228393
Bronze	R05.5	Roto	M5X100	100		1	228306
		-	M5X100	100		1	228394
Pure white	R07.1	-	M5X100	100		1	228348
Traffic white	R07.2	Roto	M5X100	100		1	228249
		-	M5X100	100		1	228349
Spindle length 127							
Silver	R01.1	-	M5X110	127		1	601712
Silver	R01.5	-	M5X110	127		1	629813
Titanium	R01.3	-	M5X110	127		1	601714
Dark bronze	R05.4	-	M5X110	127		1	629814
Jet black, matt	R06.2M	-	M5X110	127		1	629815
Traffic white	R07.2	-	M5X110	127		1	601729

Product description

- Handle set with rosette version
- Outside handle fix connected
- Short-necked handle with PC rosette outside
- Standard handle with PC rosette inside
- Concealed screw fixing
- 90-degree lock-in position
- 10-year functional warranty
-
-

Scope of delivery

- 2 window handles
- 2 PC rosettes
- 4 fixing screws

Note

Profile cylinder not included in delivery scope.

Roto Line long-plate and handle outside – rosette and handle inside

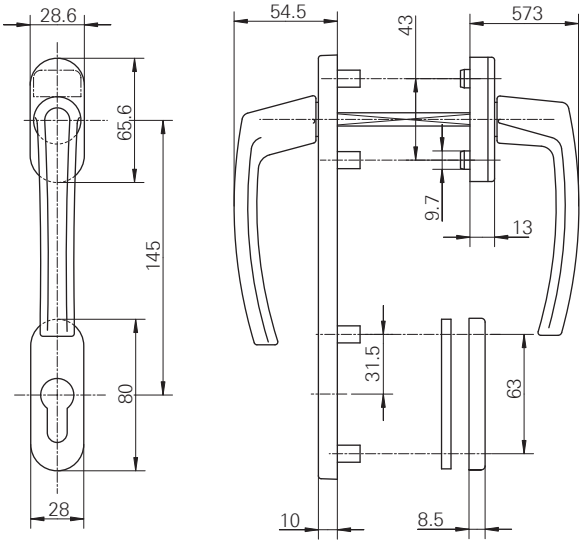

Parts list

Colour							L/R	№
Spindle length 100								
Traffic white	R07.2	-	M5X100	100		1	L	228366
		-	M5X100	100		1	R	228367
Spindle length 100								
Silver	R01.1	-	M5x100	100		1	-	228385
Titanium	R01.3	-	M5x100	100		1	-	228339
Traffic white	R07.2	-	M5x100	100		1	-	228343

Product description

- Handle set with continuous angular-shaped long-plate outside
- Outside handle fix connected
- Standard handle with continuous angular-shaped long-plate outside
- Standard handle with PC rosette inside
- Concealed screw fixing
- 90-degree lock-in position
- 10-year functional warranty
-
-

Scope of delivery

- 2 window handles
- 2 PC rosettes
- 2 fixing screws

Note

Profile cylinder not included in delivery scope.
For the use with aluminium profiles, a flush-encased gearbox is required (see page 80–81).

Roto Line angular-shaped long-plate and flat handle outside – rosette and handle inside

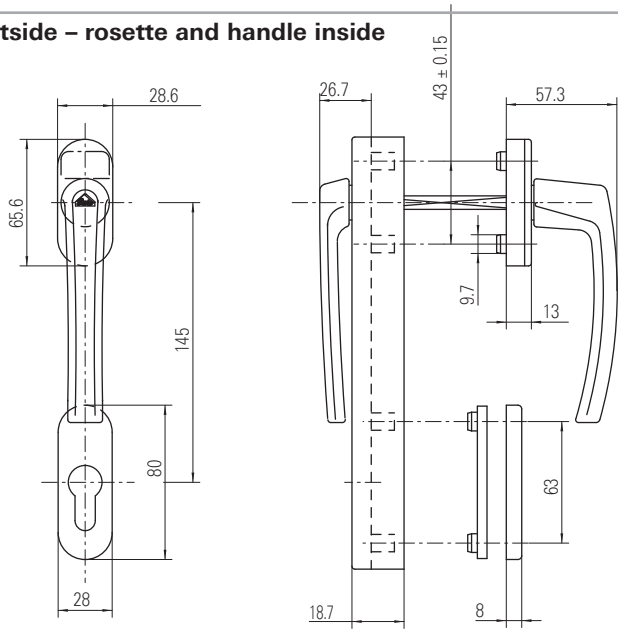

Parts list

Colour							L/R	№
Spindle length 100								
Traffic white	R07.2	-	M5X100	100		1	L	228378
		-	M5X100	100		1	R	228379

Product description

- Handle set with continuous angular-shaped long-plate outside
- Outside handle fix connected
- Short-necked handle with continuous angular-shaped long-plate outside
- Standard handle with PC rosette inside
- Concealed screw fixing
- 90-degree lock-in position
- 10-year functional warranty
-
-

Scope of delivery

- 2 window handles
- 2 PC rosettes
- 2 fixing screws

Note

Profile cylinder not included in delivery scope.
For the use with aluminium profiles, a flush-encased gearbox is required (see page 80–81).

The Roto Line handles for Roto NT described in this chapter, are suitable for aluminium profiles, if the depicted flush-encased gearboxes or the SEC flush-encased gearboxes are used. The spindle of 30 resp. 35 mm must be shortened to a spindle length of 24 mm.

Flush-encased gearbox AL

Parts list

Description		Cams		№
Flush-encased gearbox AL	24	10	10	378337

Flush-encased gearbox AL (without mishandling device)

Parts list

Description		Cams		№
Flush-encased gearbox without mishandling device	24	10	10	378338

SEC flush-encased gearbox AL

Parts list

Description		Cams		№
SEC flush-encased gearbox AL	24	10	10	607736

Note:
For meeting RC requirements of a window, further hardware components are required.

SEC flush-encased gearbox AL (without mishandling device)

Parts list

Description		Cams		№
SEC flush-encased gearbox without mishandling device	24	10	10	457210

Note:
For meeting RC requirements of a window, further hardware components are required.

Security components in conjunction with SEC flush-encased gearbox

Parts list

Description	Pos.	Pieces		№
Countersunk screw "niro" (stainless-steel) M5 x 30	14	2	100	212501
SEC drilling protection	15	1	10	487406
SEC connector	8	2	100	447113
Cylinder screw M5 x 8	36	2	100	335249
SEC rebate clearance reduction	38	1	50	334360

Note:
For meeting RC requirements of a window, further hardware components are required.

Connector set AL 540 for Roto Line espagnolettes

Parts list

Description				№
Connector set AL 540	-	-	10	335184

Product description

- Connector for connecting geared-handles
- Predetermined breaking point for enabling two main corner drives at the central locking system

Scope of delivery

- 1 T connector
- 2 flat-headed screws M5 x 12

Espagnolette accessories set AL 540 for Roto Line espagnolettes with thin-walled profiles

Parts list

Description				№
Espagnolette accessories set AL 540 optional	-	-	10	335002

Product description

- Geared-handle support for fixing of the geared-handle
- Can be used optionally with thin-walled sash profiles

Scope of delivery

- 1 geared-handle support
- 2 flat-headed screws M5 x 12

Geared-handle support

Parts list

Description				№
Geared-handle support	-	-	100	331937

Connector set for Roto Line reverse-action espagnolettes

Parts list

Description				№
Connector set for reverse-action espagnolettes	-	-	10	212325

Product description

- Connector set for connecting reverse-action espagnolettes
- Hinging of the connecting-rod with 6 mm bracket

Scope of delivery

- 1 connector for Roto Line top reverse-action espagnolette
- 1 connector for Roto Line bottom reverse-action espagnolette
- 2 flat-headed screws M5 x 12

Connector for Roto Line top reverse-action espagnolette

Parts list

Description				№
Connector for Roto Line top reverse-action espagnolette	-	-	100	212000

Connector for Roto Line bottom reverse-action espagnolette

Parts list

Description				№
Connector for Roto Line bottom reverse-action espagnolette	-	-	100	212001

Flat-headed screw M5 x 12

Parts list

Description				№
Flat-headed screw M5 x 12	-	-	100	212500

Connector-bolt, insertable

Parts list

Description				№
Connector-bolt, insertable				
Zinc alloy	-	-	100	254601
PVC	-	-	100	334672

Product description

- For connecting geared-handles
- Only for Turn-Only sashes

Roto Line escutcheonless handle

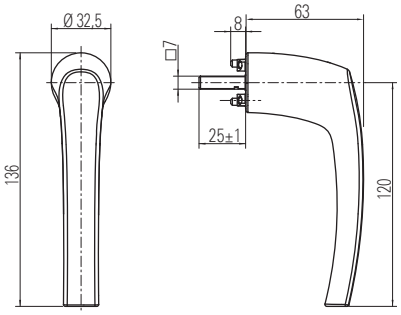

Parts list

Colour							№
Spindle length 25							
Silver	R01.1	-	M4 x 12.5	25		10	623294
Silver	R01.5	-	M4 x 12.5	25		10	377908
Jet black	R06.2	-	M4 x 12.5	25		10	377909
Traffic white	R07.2	-	M4 x 12.5	25		10	377911
Dark bronze	R05.4	-	M4 x 12.5	25		10	377912
Stainless-steel design	R03.4	-	M4 x 12.5	25		10	619288
Special colour	SP COL	-	M4 x 12.5	25		10	377913

Product description

- Basic handle without additional functions
- Can be optionally combined with colour-matched ring rosette
- 90-degree lock-in position
-
-

Scope of delivery

- 1 window handle
- 2 fixing screws
- 1 transport protection

Note

- For ring rosettes refer to page 72.

Roto Line escutcheonless handle, lockable

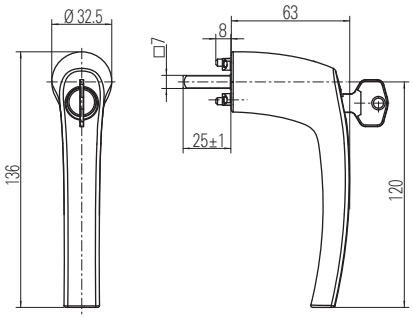

Parts list

Colour							№
Spindle length 25							
Silver	R01.1	-	M4 x 12.5	25		10	623475
Silver	R01.5	-	M4 x 12.5	25		10	377914
Jet black	R06.2	-	M4 x 12.5	25		10	377915
Traffic white	R07.2	-	M4 x 12.5	25		10	377917
Dark bronze	R05.4	-	M4 x 12.5	25		10	377918
Stainless-steel design	R03.4	-	M4 x 12.5	25		10	619289
Special colour	SP COL	-	M4 x 12.5	25		10	377919

Product description

- Lockable handle with tested torque of 40 Nm
- Locking: Push cylinder with turn-key
- For locking and unlocking
- Operable if handle is unlocked
- 90-degree lock-in position
-
-

Scope of delivery

- 1 window handle
- 1 key
- 2 fixing screws
- 1 transport protection

Roto Line geared-handle

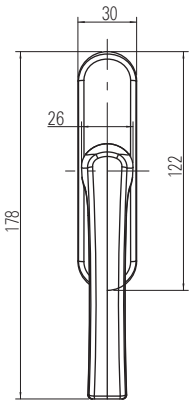

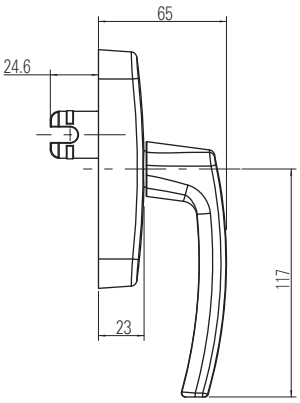

Parts list

Colour							№
Fork length 26							
Silver	R01.1		-	26		10	238671
Silver	R01.1	-	-	26		10	384509
Silver	R01.1		-	26		10	384325
Silver	R01.5		-	26		10	377474
Silver	R01.5	-	-	26		10	384503
Dark bronze	R05.4		-	26		10	377478
Dark bronze	R05.4	-	-	26		10	384504
Jet black, matt	R06.2M		-	26		10	377475
Jet black, matt	R06.2M	-	-	26		10	384505
Jet black	R06.2		-	26		10	385190
Pure white	R07.1		-	26		10	377476
Pure white	R07.1		-	26		10	384506
Traffic white	R07.2		-	26		10	377477
Traffic white	R07.2	-	-	26		10	384507
Gold	R03.3	-	-	26		10	457093
Stainless-steel design	R03.4		-	26		10	335880
Special colour	SP COL		-	26		10	377479
Special colour	SP COL	-	-	26		10	384508
Unpainted, uncoated	Raw		-	26	-	10	632981

Product description

- Geared-handle without additional functions
- 90-degree lock-in position
-
-

Scope of delivery

- 1 geared-handle

Note

Roto Line espagnolette 32 with logo upon request.

Roto Line geared-handle, lockable – 100 Nm

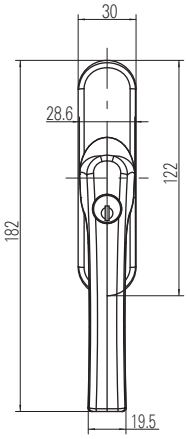

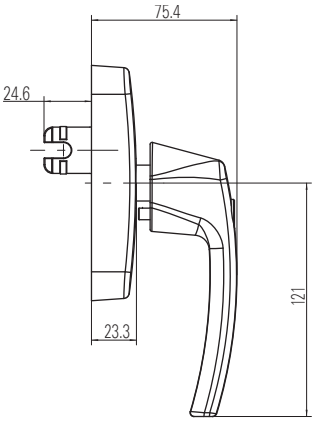

Parts list

Colour							№
Fork length 26							
Silver	R01.1		-	26		10	238692
Silver	R01.1		-	26		10	384524
Silver	R01.1	-	-	26		10	384525
Silver	R01.5		-	26		10	378843
Dark bronze	R05.4		-	26		10	378917
Jet black, matt	R06.2M		-	26		10	378844
Jet black	R06.2		-	26		10	385193
Pure white	R07.1	-	-	26		10	384521
Traffic white	R07.2		-	26		10	378916
Special colour	SP COL		-	26		10	378918
Special colour	SP COL	-	-	26		10	384523
Unpainted, uncoated	Raw		-	26	-	10	238700

Product description

- Lockable handle with tested torque of 100 Nm
- Locking: Push cylinder with turn-key
- Simple and quick locking by pushing down the cylinder
- 90-degree lock-in position
-
-

Scope of delivery

- 1 geared-handle
- 2 keys

Roto Line espagnolette 26, Tilt-First, lockable – 100 Nm

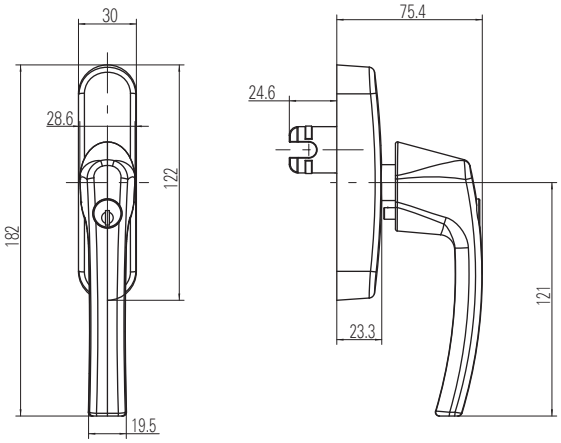

Parts list

Colour							№
Fork length 26							
Silver	R01.5		-	26		10	378919
Dark bronze	R05.4		-	26		10	378923
Jet black, matt	R06.2		-	26		10	378920
Jet black, polished	R06.2		-	26		10	385215
Traffic white	R07.2		-	26		10	378921
Pure white	R07.1		-	26		10	378921
Special colour	SP COL		-	26		10	378924
Unpainted, uncoated	Raw		-	26	-	10	238716

Product description

- Lockable handle with tested torque of 100 Nm
- Locking: Push cylinder with turn-key
- Simple and quick locking by pushing down the cylinder
- For window systems with Tilt-First operation (tilt before turn)
- 90-degree lock-in position
-
-

Scope of delivery

- 1 geared-handle
- 2 keys

Note

Refer to page 20–21 for further information.

Roto Line service handle

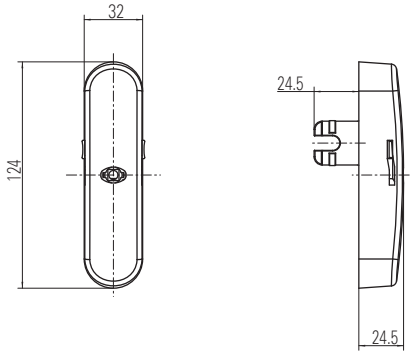

Parts list

Colour							№
Fork length 26							
Silver	R01.1	-	-	26		10	570458
Silver	R01.5	-	-	26		10	570459
Dark bronze	R05.4	-	-	26		10	570463
Jet black	R06.2	-	-	26		10	570462
Traffic white	R07.2	-	-	26		10	570460
Special colour	SP COL	-	-	26		10	570464
Unpainted, uncoated	Raw	-	-	26	-	10	570461

Product description

- Service handle without additional functions
- 90-degree lock-in position
-
-

Scope of delivery

- 1 service handle

Roto Line reverse-action espagnolette

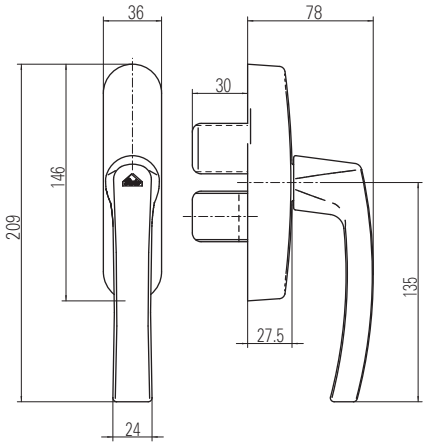

Parts list

Colour							Nº
Fork length 30							
Silver	R01.5		-	30		10	378925
Dark bronze	R05.4		-	30		10	378929
Jet black	R06.2		-	30		10	378926
Traffic white	R07.2		-	30		10	378928
Special colour	SP COL		-	30		10	378930
Unpainted, uncoated	Raw		-	30	-	10	238742

Product description

- Reverse-action espagnolette without additional functions
- 90-degree lock-in position
-
-

Scope of delivery

- 1 reverse-action espagnolette

Roto Line cranked

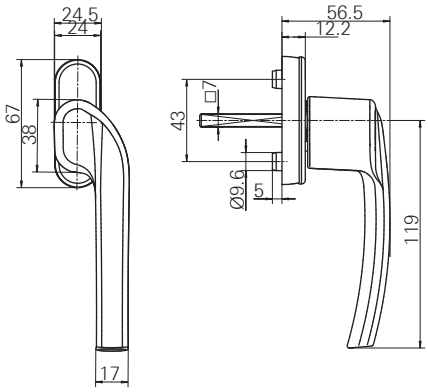

Parts list

Colour		Roto	SKG					L/R	№
Without spindle									
Pure white	R07.1	-	-	-	-		15	L	563938
		-	-	-	-		15	R	563939
Jet black, matt	R06.2M	-	-	-	-		15	L	570510
		-	-	-	-		15	R	570511
Jet black, polished	R06.2	-	-	-	-		15	L	563941
Spindle length 43									
Silver	R01.1	-	-	-	43		15	L	375318
		-	-	-	43		15	R	375811
Titanium matt	R01.3	-	-	-	43		15	L	375319
		-	-	-	43		15	R	375814
Traffic white	R07.2	-	-	-	43		15	L	375320
Traffic white	R07.2	-	-	-	43		15	R	375816
Pure white	R07.1	-	-	-	43		15	L	599455
		-	-	-	43		15	R	599456
Cream white	R07.3	-	-	-	43		15	L	375321
		-	-	-	43		15	R	375817

Product description

- Basic handle without additional functions
- 90-degree lock-in position
- 10-year functional warranty
-
-
-

Scope of delivery

- 1 window handle

Roto Line cranked, lockable

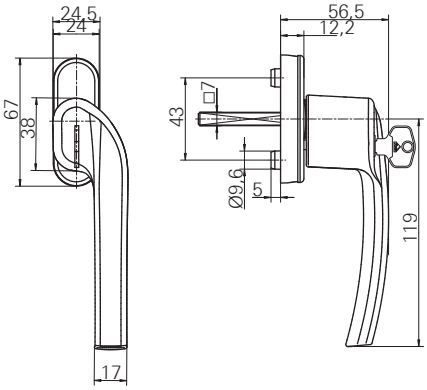

Parts list

Colour		Roto	SKG					L/R	№
Spindle length 43									
Silver	R01.1	-	SKG	-	43		15	L	375322
		-	SKG	-	43		15	R	375819
Titanium	R01.3	-	SKG	-	43		15	L	375325
		-	SKG	-	43		15	R	375820
Traffic white	R07.2	-	SKG	-	43		15	L	375330
		-	SKG	-	43		15	R	375821

Product description

- Lockable handle with tested torque of 100 Nm
- Locking: Push cylinder with turn-key
- Simple and quick locking by pushing down the cylinder
- Meets the requirements of SKG
- 90-degree lock-in position
- 10-year functional warranty
-
-

Scope of delivery

- 1 window handle with key

Roto Line Patio S

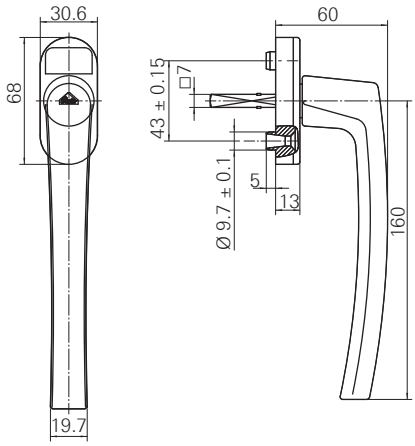

Parts list

Colour							№
Spindle length 35							
Silver	R01.1		-	35		1	211598
Nickel silver	R01.2		-	35		1	211599
Titanium matt	R01.3		-	35		1	288728
Silver	R01.5		-	35		1	623491
Medium bronze	R05.3		-	35		1	211597
Dark bronze	R05.4		-	35		1	288727
Jet black	R06.2M		-	35		1	626524
Traffic white	R07.2		-	35		1	211596
Spindle length 43							
Silver	R01.1		-	43		1	601161
Nickel silver	R01.2		-	43		1	601162
Titanium	R01.3		-	43		1	601163
Medium bronze	R05.3		-	43		1	601164
Dark bronze	R05.4		-	43		1	601165
Traffic white	R07.2		-	43		1	601166

Product description

- Basic handle without additional functions
- 90-degree lock-in position
- Classification according to DIN EN 13126-3, see page 17, table 1
- 10-year functional warranty
-
-

Scope of delivery

- 1 window handle

Roto Line Patio Z, door handle set

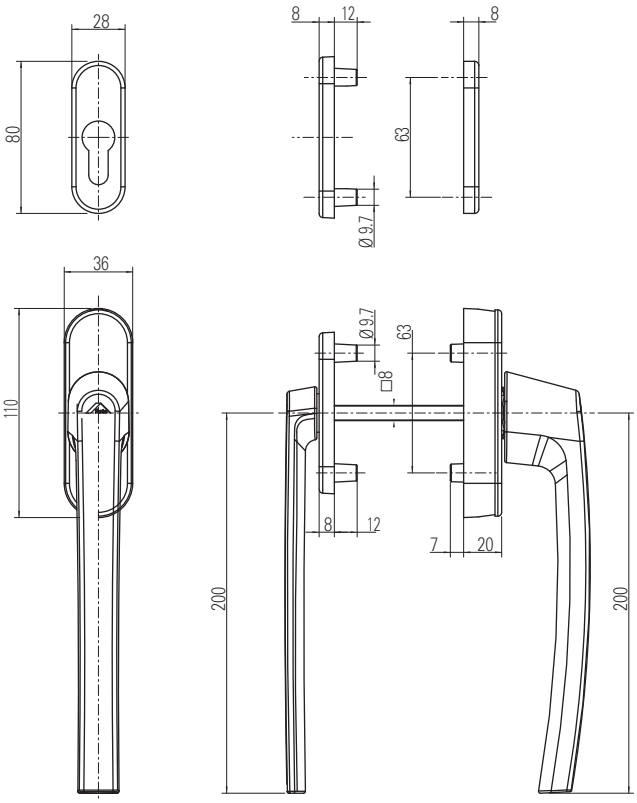

Parts list

Colour							№
Spindle length 100							
Silver	R01.1		M5X100	100		1	494487
Medium bronze	R05.3		M5X100	100		1	494488
Dark bronze	R05.4		M5X100	100		1	494489
Traffic white	R07.2		M5X100	100		1	494490
Cream white	R07.3		M5X100	100		1	564911
Spindle length 135							
Silver	R01.1		M5X110	135		1	601690
Silver	R01.5		M5X110	135		1	626533
Medium bronze	R05.3		M5X110	135		1	601691
Dark bronze	R05.4		M5X110	135		1	601692
Jet black	R06.2		M5X110	135		1	626533
Traffic white	R07.2		M5X110	135		1	601693

Product description

- Basic handle without additional functions
- Screws can be shortened
- 90/127-degree lock-in position
- 10-year functional warranty
-
-

Scope of delivery

- 1 window handle inside
- 1 flat handle outside
- 4 fixing screws

Roto Line window handle Patio Z

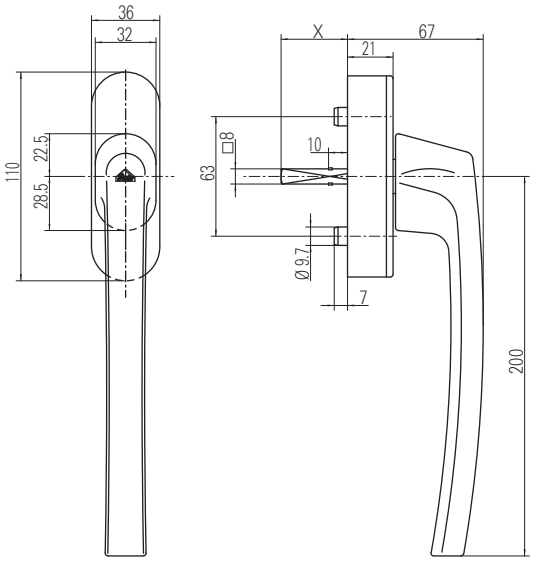

Parts list

Colour							Nº
Spindle length 35							
Silver	R01.1		M5x50	35		1	494475
Nickel silver	R01.2		M5x50	35		1	494476
Titanium matt	R01.3		M5x50	35		1	494477
Silver	R01.5		M5x50	35		1	626528
Medium bronze	R05.3		M5x50	35		1	494478
Dark bronze	R05.4		M5x50	35		1	494479
Jet black	R6.2M		M5x50	35		1	626529
Traffic white	R07.2		M5x50	35		1	494480
Cream white	R07.3		M5x50	35		1	564909
Spindle length 40							
Silver	R01.1		M5x55	40		1	502526
Nickel silver	R01.2		M5x55	40		1	502527
Titanium matt	R01.3		M5x55	40		1	502528
Medium bronze	R05.3		M5x55	40		1	502529
Dark bronze	R05.4		M5x55	40		1	502530
Traffic white	R07.2		M5x55	40		1	502531
Spindle length 43							
Silver	R01.1		M5X60	43		1	601148
Nickel silver	R01.2		M5X60	43		1	601149
Titanium matt	R01.3		M5X60	43		1	601150
Medium bronze	R05.3		M5X60	43		1	601151
Dark bronze	R05.4		M5X60	43		1	601152
Traffic white	R07.2		M5X60	43		1	601155

Product description

- Basic handle without additional functions
- 90/127-degree lock-in position
- 10-year functional warranty
-
-

Scope of delivery

- 1 window handle
- 2 fixing screws

Roto Line window handle Patio Z, lockable

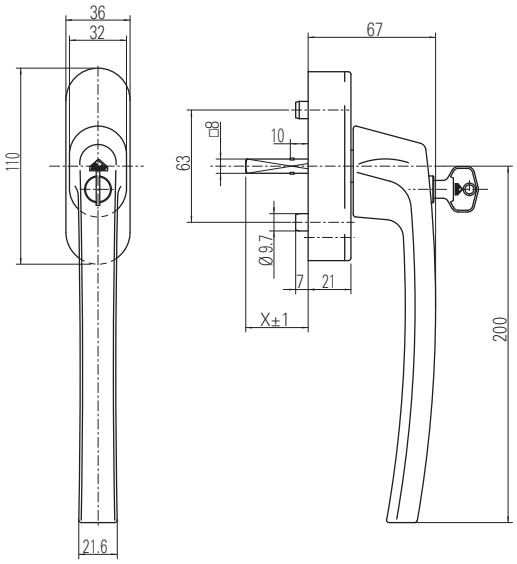

Parts list

Colour							№
Spindle length 35							
Silver	R01.1		M5x50	35		1	494481
Nickel silver	R01.2		M5x50	35		1	494482
Titanium matt	R01.3		M5x50	35		1	494483
Silver	R01.5		M5x50	35		1	626530
Medium bronze	R05.3		M5x50	35		1	494484
Dark bronze	R05.4		M5x50	35		1	494485
Jet black	R06.2M		M5x50	35		1	626531
Traffic white	R07.2		M5x50	35		1	494486
Cream white	R07.3		M5x50	35		1	564910
Spindle length 40							
Silver	R01.1		M5x55	40		1	502532
Nickel silver	R01.2		M5x55	40		1	502533
Titanium matt	R01.3		M5x55	40		1	502534
Medium bronze	R05.3		M5x55	40		1	502535
Dark bronze	R05.4		M5x55	40		1	502536
Traffic white	R07.2		M5x55	40		1	502537
Spindle length 43							
Silver	R011		M5X60	43		1	601156
Nickel silver	R012		M5X60	43		1	601157
Titanium matt	R013		M5X60	43		1	601172
Medium bronze	R053		M5X60	43		1	601158
Dark bronze	R054		M5X60	43		1	601159
Traffic white	R072		M5X60	43		1	601160

Product description

- Lockable handle with tested torque of 40 Nm
- Locking: Push cylinder with turn-key
- For locking and unlocking
- Operable if handle is unlocked
- 90/127-degree lock-in position
- 10-year functional warranty
-
-

Scope of delivery

- 1 window handle with key
- 2 fixing screws

Roto Line window handle Patio Life

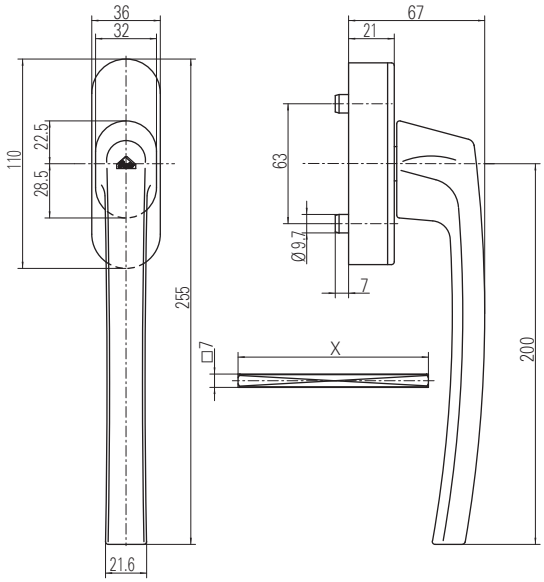

Parts list

Colour							№
Spindle length 100							
Silver	R01.1		M5X110	100		1	494447
Titanium matt	R01.3		M5X110	100		1	640344
Medium bronze	R05.3		M5X110	100		1	494448
Traffic white	R07.2		M5X110	100		1	494449
Spindle length 150							
Silver	R01.1		M5X110	150		1	603596
Medium bronze	R05.3		M5X110	150		1	603597
Bronze	R05.5		M5X110	150		1	614576
Traffic white	R07.2		M5X110	150		1	603598

Product description

- Basic handle without additional functions
- 90-degree lock-in position
- 10-year functional warranty
-
-

Scope of delivery

- 1 window handle
- Spindle
- 2 fixing screws

Roto Line window handle Patio Life, lockable

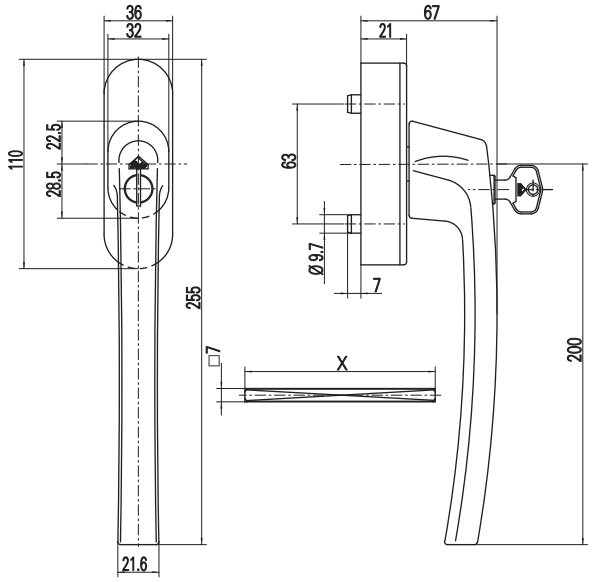

Parts list

Colour							№
Spindle length 100							
Silver	R01.1		M5X100	100		1	494450
Titanium matt	R01.3		M5X110	100		1	614247
Medium bronze	R05.3		M5X100	100		1	494451
Traffic white	R07.2		M5X100	100		1	494452
Spindle length 150							
Silver	R01.1		M5X110	150		1	603599
Medium bronze	R05.3		M5X110	150		1	603600
Bronze	R05.5		M5X110	150		1	614577
Traffic white	R07.2		M5X110	150		1	603601

Product description

- Lockable handle with tested torque of 50 Nm
- Locking: Push cylinder with turn-key
- For locking and unlocking
- Operable if handle is unlocked
- Screws can be shortened
- 90-degree lock-in position
- 10-year functional warranty
-
-

Scope of delivery

- 1 window handle
- 1 spindle
- 2 fixing screws

Roto Line door handle set Patio Life with profile cylinder rosette outside

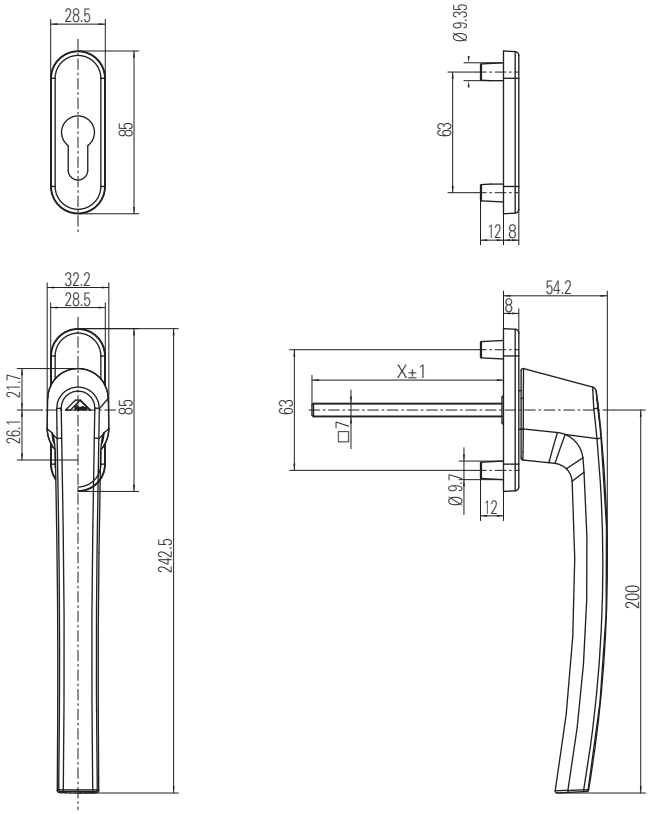

Parts list

Colour							№
Spindle length 100							
Silver	R01.1		M5X100	100		10	494453
Titanium matt	R01.3		M5X110	100		10	734005
Medium bronze	R05.3		M5X100	100		10	494454
Traffic white	R07.2		M5X100	100		10	494465
Spindle length 150							
Silver	R01.1		M5X110	150		10	603602
Medium bronze	R05.3		M5X110	150		10	603603
Bronze	R05.5		M5X110	150		10	614578
Traffic white	R07.2		M5X110	150		10	603604

Product description

- Basic handle without additional functions
- 90-degree lock-in position
- 10-year functional warranty
-
-

Scope of delivery

- 1 window handle
- 1 profile cylinder rosette
- 2 fixing screws

Roto Line Patio Life profile cylinder rosette inside

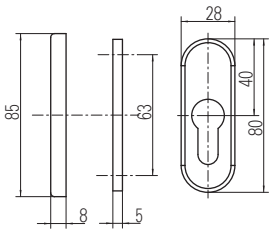

Parts list

Colour							
Spindle length 43							
Silver	R01.1	-	-	43		10	494466
Titanium matt	R01.3	-	-	43		10	228260
Medium bronze	R05.3	-	-	43		10	494467
Traffic white	R07.2	-	-	43		10	258952

Product description

-
-

Scope of delivery

- 1 profile cylinder rosette

Roto Patio Life recessed grip 43 mm or 63 mm

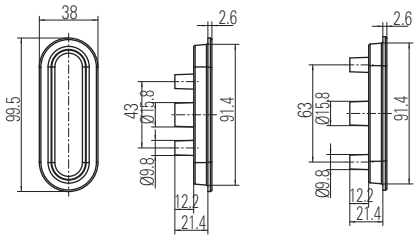

Parts list

Colour							№
Distance 43 mm							
Silver	R01.1	-	-		43	10	494472
Titanium matt	R01.3	-	-		43	10	623221
Medium bronze	R05.3	-	-		43	10	494473
Bronze	R05.5	-	-		43	10	614625
Traffic white	R07.2	-	-		43	10	494474
Unpainted, uncoated	Raw	-	-	-	43	10	387935
Distance 63 mm							
Silver	R01.1	-	-		63	10	494469
Titanium matt	R01.3	-	-		63	10	623261
Medium bronze	R05.3	-	-		63	10	494470
Bronze	R05.5	-	-		63	10	614626
Traffic white	R07.2	-	-		63	10	494471
Unpainted, uncoated	Raw	-	-	-	63	10	621912

Product description

-
-

Scope of delivery

- 1 recessed grip

Roto Patio Z surface-mounted positive-control handle, incl. connector

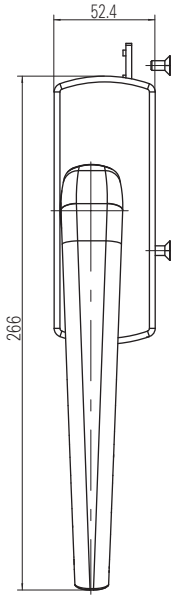

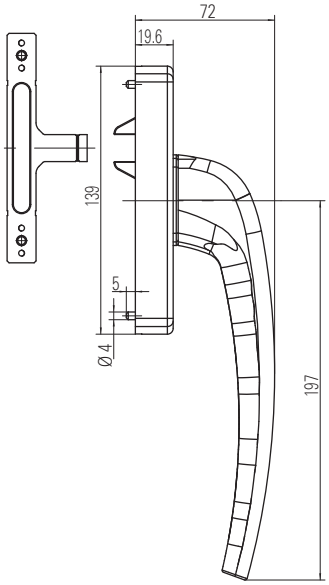

Parts list

Colour							L/R	№
Silver	R01.1	-	-	-		1	L	562713
		-	-	-		1	R	562714
Titanium matt	R01.3	-	-	-		1	L	563944
		-	-	-		1	R	563943
Medium bronze	R05.3	-	-	-		1	L	564431
		-	-	-		1	R	564430
Dark bronze	R05.4	-	-	-		1	L	562715
		-	-	-		1	R	562716
Traffic white	R07.2	-	-	-		1	L	562717
		-	-	-		1	R	562718
Cream white	R07.3	-	-	-		1	L	562719
		-	-	-		1	R	562720

Product description

- Basic handle without additional functions
- 90/127-degree lock-in position
- for 13 mm axis
- Can be shortened, also for 9 mm axis
-
-

Scope of delivery

- 1 window handle
- 1 connector

Roto Patio Z surface-mounted positive-control handle, lockable, 100 Nm, incl. connector

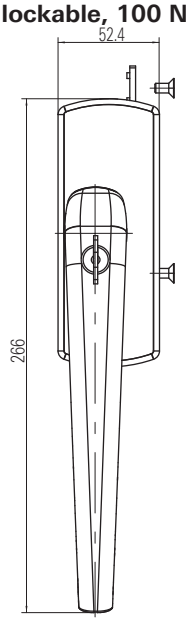

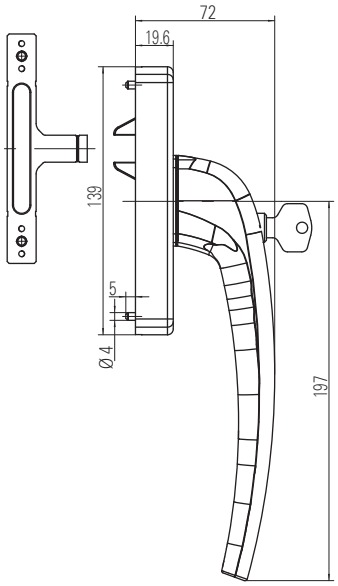

Parts list

Colour							L/R	Nº
Silver	R01.1	-	-	-		1	L	562721
		-	-	-		1	R	562722
Titanium matt	R01.3	-	-	-		1	L	563996
		-	-	-		1	R	563995
Medium bronze	R05.3	-	-	-		1	L	564433
		-	-	-		1	R	564432
Dark bronze	R05.4	-	-	-		1	L	562723
		-	-	-		1	R	562724
Traffic white	R07.2	-	-	-		1	L	562725
		-	-	-		1	R	562726
Cream white	R07.3	-	-	-		1	L	562727
		-	-	-		1	R	562728

Product description

- Lockable handle with tested torque of 100 Nm
- Locking: Push cylinder with turn-key
- Simple and quick locking by pushing down the cylinder
- Meets the requirements of DIN EN 1627-1630, RC1 – RC6
- 90/127-degree lock-in position
- for 13 mm axis
- Can be shortened, also for 9 mm axis
-
-

Scope of delivery

- 1 window handle
- 1 connector
- 2 key

Connector & screws for positive-control handle

Parts list

Description				№
Connector & screws for positive control handle				
9 mm hardware axis			1	562729
13 mm hardware axis			1	562730

Product description

-
-

Scope of delivery

- 1 connector
- 2 self-tapping screws

Roto Line flat handle

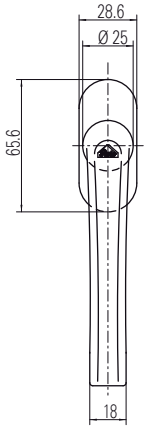

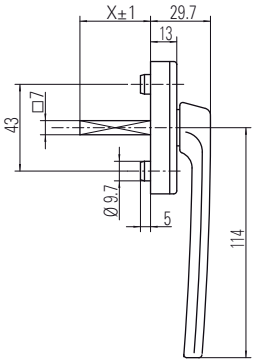

Parts list

Colour							№
Spindle length 35							
Silver	R01.1		-	35		20	336112
Titanium matt	R01.3		-	35		10	485766
Brass, matt	R03.1		-	35		10	485765
Grey brown	R04.1		-	35		10	485764
Black brown	R04.4		-	35		10	490462
Medium bronze	R05.3		-	35		20	336111
Traffic white	R07.2		-	35		20	336110
Spindle length 55							
Silver	R01.1		-	55		10	490560
Medium bronze	R05.3		-	55		10	490561
Jet black, matt	R06.2M		-	55		10	640276
Traffic white	R07.2		-	55		10	490562
Handle outside, without spindle							
Silver	R01.1		-	-		10	635136
Jet black, matt	R06.2M		-	-		10	635135
Traffic white	R07.2		-	-		10	635134
Unpainted, uncoated	Raw		-	-	-	10	635138

Product description

- Basic handle without additional functions
- 90-degree lock-in position
- 10-year functional warranty
-
-

Scope of delivery

- 1 window handle

Roto Patio Z surface-mounted positive-control handle, incl. connector

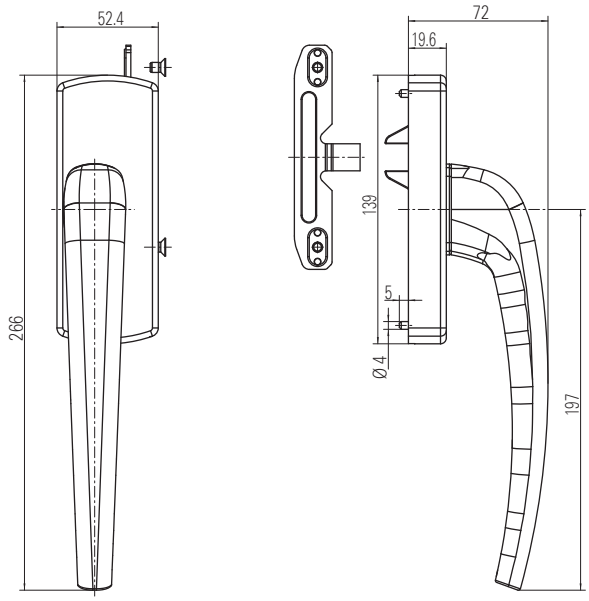

Parts list

Colour							L/R	№
Silver	R01.5	-	-	-		1	L	625412
		-	-	-		1	R	625408
Dark bronze	R05.4	-	-	-		1	L	625415
		-	-	-		1	R	625411
Jet black, matt	R06.2M	-	-	-		1	L	625414
		-	-	-		1	R	625410
Traffic white	R07.2	-	-	-		1	L	625413
		-	-	-		1	R	625409

Product description

- Basic handle without additional functions
- 90/127-degree lock-in position
-
-

Scope of delivery

- 1 window handle
- 1 connector

Roto Patio Z surface-mounted positive-control handle, lockable, 100 Nm, incl. connector

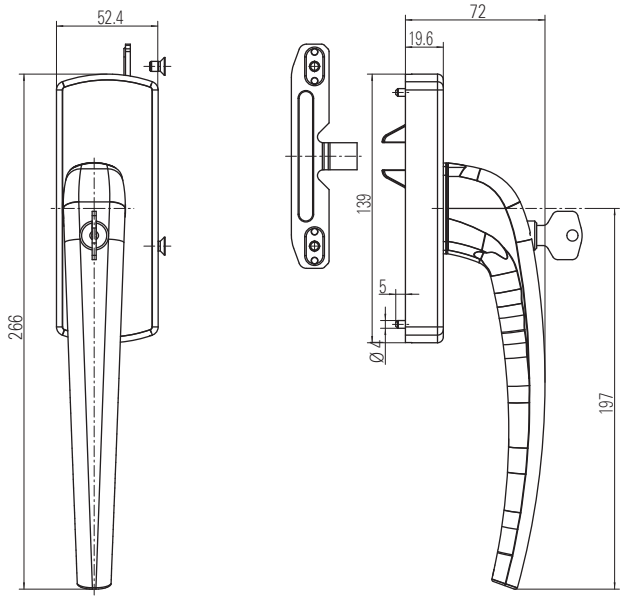

Parts list

Colour							L/R	№
Silver	R01.5	-	-	-		1	L	625420
		-	-	-		1	R	625416
Dark bronze	R05.4	-	-	-		1	L	625423
		-	-	-		1	R	625419
Jet black, matt	R06.2M	-	-	-		1	L	625422
		-	-	-		1	R	625418
Traffic white	R07.2	-	-	-		1	L	625421
		-	-	-		1	R	625417

Product description

- Lockable handle with tested torque of 100 Nm
- Locking: Push cylinder with turn-key
- Simple and quick locking by pushing down the cylinder
- Meets the requirements of DIN EN 1627-1630, RC1 – RC6
- 90/127-degree lock-in position
-
-

Scope of delivery

- 1 window handle
- 1 connector
- 2 key

Roto Line recessed grip Patio Lift – outside handles

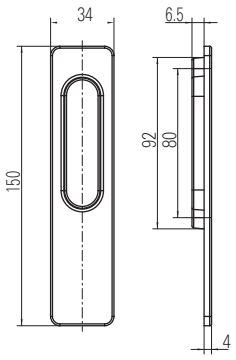

Parts list

Colour							№
Recessed grip, angular, 7 mm							
Silver	R01.1	-	-	-		10	635151
Jet black, matt	R06.2M	-	-	-		10	635150
Traffic white	R07.2	-	-	-		10	635149
Unpainted, uncoated	Raw	-	-	-	-	10	635153

Product description

- Outside handles
- Screw connection with inside handle
-
-

Scope of delivery

- 1 recessed grip

Roto Line recessed grip Patio Lift – outside handles

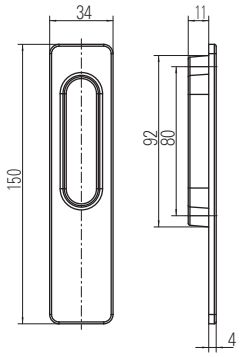

Parts list

Colour							
Recessed grip, angular, 11 mm							
Silver	R01.1	-	-	-		10	635156
Jet black, matt	R06.2M	-	-	-		10	635155
Traffic white	R07.2	-	-	-		10	635154
Unpainted, uncoated	Raw	-	-	-	-	10	635158

Product description

- Outside handles
- Screw connection with inside handle
-
-

Scope of delivery

- 1 recessed grip

Roto Line recessed grip Patio Lift – outside handles

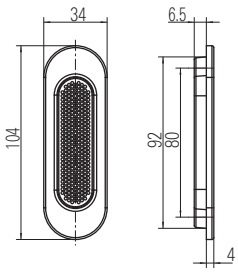

Parts list

Colour							№
Recessed grip, oval, 7 mm							
Silver	R01.1		-	-		10	635161
Jet black, matt	R06.2M		-	-		10	635160
Traffic white	R07.2		-	-		10	635159
Unpainted, uncoated	Raw		-	-	-	10	635163

Product description

- Outside handles
- Screw connection with inside handle
-
-

Scope of delivery

- 1 recessed grip

Roto Line window handle Patio Lift

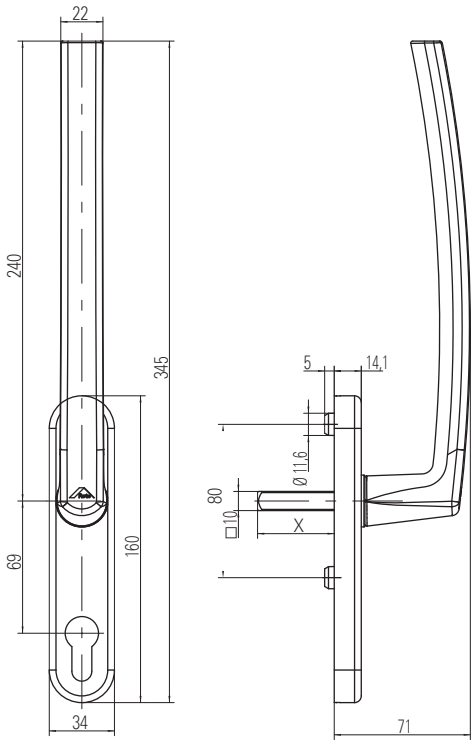

Parts list

Colour							№
Spindle length 40 with profile-cylinder hole							
Silver	R01.1		M5x110	40		1	635141
Jet black, matt	R06.2M		M5x110	40		1	635140
Traffic white	R07.2		M5x110	40		1	635139
Unpainted, uncoated	Raw		M5x110	40	-	1	635143
Spindle length 40 without profile-cylinder hole							
Silver	R01.1		M5x110	40		1	635146
Titanium matt	R01.3		M5x110	40		1	643638
Jet black, matt	R06.2M		M5x110	40		1	635145
Traffic white	R07.2		M5x110	40		1	635144
Unpainted, uncoated	Raw		M5x110	40	-	1	635148
Spindle length inside handle, 190 with profile-cylinder hole							
Silver	R01.1		M5x110	190		1	635131
Jet black, matt	R06.2M		M5x110	190		1	635130
Traffic white	R07.2		M5x110	190		1	635129
Unpainted, uncoated	Raw		M5x110	190	-	1	635133

Product description

- Inside handle
- Screw can be shortened
- with spindle
- long handle lever
- With and without profile cylinder
- 180-degree lock-in position
-
-

Scope of delivery

- 1 window handle
- 2 fixing screws

Note:

Profile cylinder not included in delivery scope.

Roto Line sliding handles – Overview

Roto Line sliding handles offer a high degree of flexibility for the user: Three inside handle versions and four outside handle versions can be combined individually depending on taste. Each handle version is available in seven standard colours or uncoated. It is possible to combine different colours for inside and outside.

Roto Line sliding handles convince with their optimised technology and their excellent stability which is achieved by the metal operating lever.

Assembly is simple: Using the components from the accessories box, connect the inside and outside handles. For safety reasons, the fixing of the outside handle is covered so that the handle cannot be removed.

This three-part system can be used for profile depths from 38–77 mm.

Inside handles / Outside handles			
	Please use accessory kit type 1	**Please use accessory kit type 1**	**Please use accessory kit type 1**
	Please use accessory kit type 2	**Please use accessory kit type 2**	**Please use accessory kit type 2**
	Please use accessory kit type 2	**Please use accessory kit type 2**	**Please use accessory kit type 2**
			Please use accessory kit type 3

Different accessory kits have to be used depending on the desired handle combination:

Roto Line pull handle, without cylinder, with lever

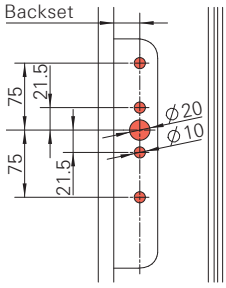

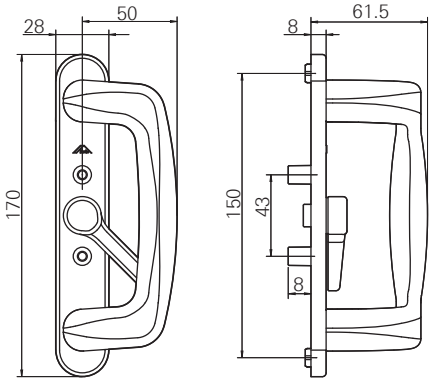

Parts list

Colour							№
Chromium, polished	R01.4		-	-		1	613220
Silver	R01.5		-	-		1	613222
Gold	R03.2		-	-		1	613223
Grey brown	R04.1		-	-		1	613224
Jet black	R06.2		-	-		1	613225
Traffic white	R07.2		-	-		1	613226
Cream white	R07.3		-	-		1	613227
Unpainted, uncoated	Raw		-	-	-	1	613228

Product description

- Short plate
- Quick locking via lever
-
-

Scope of delivery

- 1 window handle

Roto Line pull handle, without cylinder, with long-plate and lever

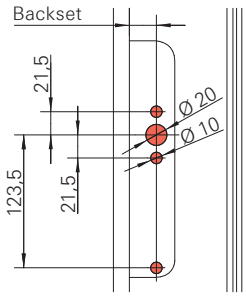

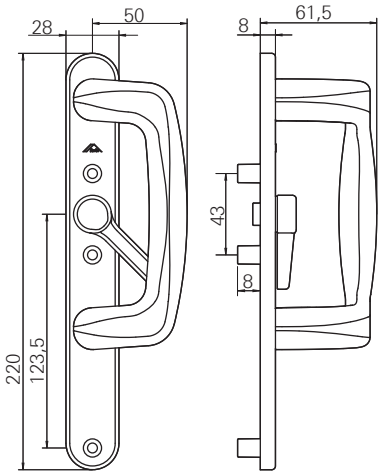

Parts list

Colour							№
Chromium, polished	R01.4		-	-		1	613229
Silver	R01.5		-	-		1	613230
Gold	R03.2		-	-		1	613231
Grey brown	R04.1		-	-		1	613232
Jet black	R06.2		-	-		1	613233
Traffic white	R07.2		-	-		1	613234
Cream white	R07.3		-	-		1	613235
Unpainted, uncoated	Raw		-	-	-	1	613237

Product description

- Long-plate
- Quick locking via lever
-
-

Scope of delivery

- 1 window handle

Roto Line pull handle, with cylinder, with lever

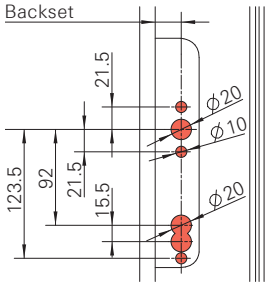

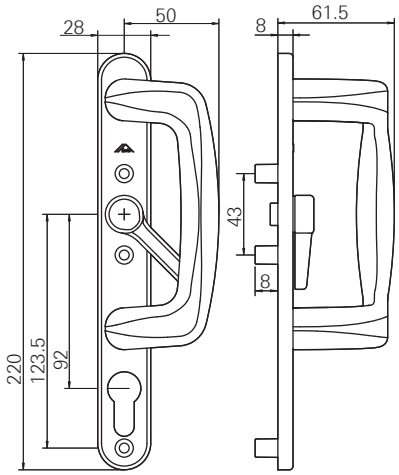

Parts list

Colour							№
Chromium, polished	R01.4		-	-		1	613238
Silver	R01.5		-	-		1	613239
Gold	R03.2		-	-		1	613240
Grey brown	R04.1		-	-		1	613241
Jet black	R06.2		-	-		1	613242
Traffic white	R07.2		-	-		1	613243
Cream white	R07.3		-	-		1	613244
Unpainted, uncoated	Raw		-	-	-	1	613245

Product description

- Long-plate
- Quick locking via lever
- Prepared for profile cylinder
-
-

Scope of delivery

- 1 window handle

Note

Profile cylinder not included in delivery scope.

Roto Line recessed grip

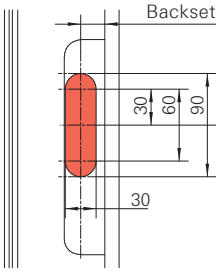

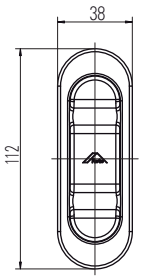

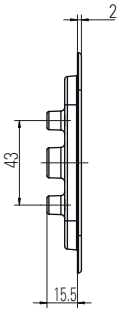

Parts list

Colour							№
Chromium, polished	R01.4		-	-		100	613182
Silver	R01.5		-	-		100	613183
Gold	R03.2		-	-		100	613184
Grey brown	R04.1		-	-		100	613185
Jet black	R06.2		-	-		100	605551
Traffic white	R07.2		-	-		100	605543
Cream white	R07.3		-	-		100	608183
Unpainted, uncoated	Raw		-	-	-	100	487261

Product description

- Outside handle
- Screw connection with inside handle
-
-

Scope of delivery

- 1 recessed grip

Roto Line pull handle, without cylinder

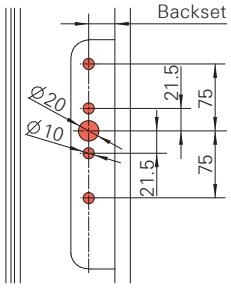

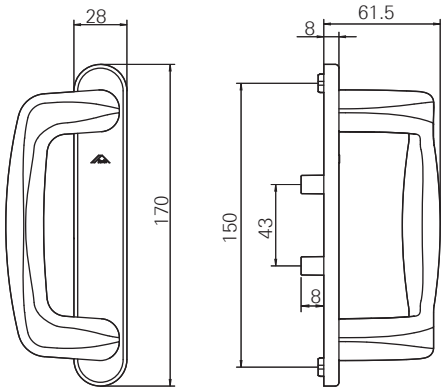

Parts list

Colour							№
Chromium, polished	R01.4		-	-		1	613186
Silver	R01.5		-	-		1	613187
Gold	R03.2		-	-		1	613188
Grey brown	R04.1		-	-		1	613189
Jet black	R06.2		-	-		1	613190
Traffic white	R07.2		-	-		1	613191
Cream white	R07.3		-	-		1	613192
Unpainted, uncoated	Raw		-	-	-	1	613193

Product description

- Short plate
-
-

Scope of delivery

- 1 window handle

Roto Line pull handle, without cylinder, with long-plate

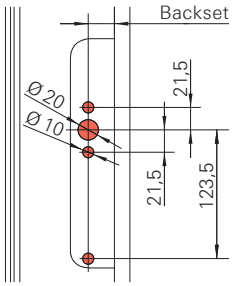

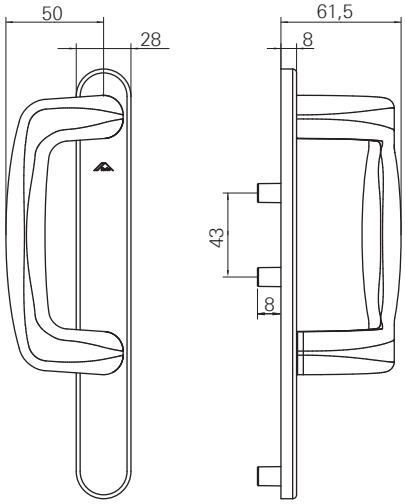

Parts list

Colour							№
Chromium, polished	R01.4		-	-		1	613194
Silver	R01.5		-	-		1	613195
Gold	R03.2		-	-		1	613196
Grey brown	R04.1		-	-		1	613197
Jet black	R06.2		-	-		1	613198
Traffic white	R07.2		-	-		1	613199
Cream white	R07.3		-	-		1	613200
Unpainted, uncoated	Raw		-	-	-	1	613201

Product description

- Long-plate
-
-

Scope of delivery

- 1 window handle

Roto Line pull handle, with cylinder, with lever

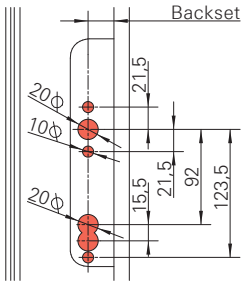

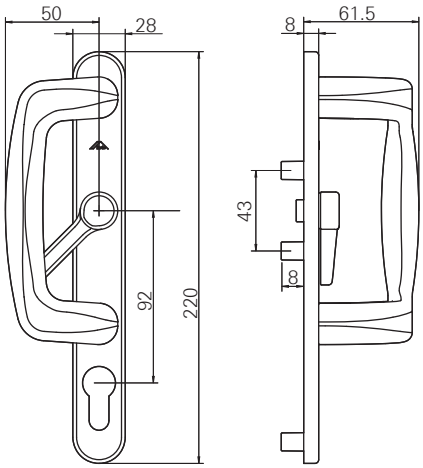

Parts list

Colour							№
Chromium, polished	R01.4		-	-		1	613202
Silver	R01.5		-	-		1	613203
Gold	R03.2		-	-		1	613204
Grey brown	R04.1		-	-		1	613215
Jet black	R06.2		-	-		1	613216
Traffic white	R07.2		-	-		1	613217
Cream white	R07.3		-	-		1	613218
Unpainted, uncoated	Raw		-	-	-	1	613219

Product description

- Long-plate
- Quick locking via lever
- Prepared for profile cylinder
-
-

Scope of delivery

- 1 window handle

Note

Profile cylinder not included in delivery scope.

Functionality of different screw types

Raised countersunk head screws
Screw connection of inside handle and outside handle.

Countersunk screws
Fastening the pull handle to the plate.

Pan-head tapping screw
Bottom screw hole, if long and short handle have to be combined.
(No screw hole on the opposite side)

Roto Line accessory kit – type 1

Parts list

Sash profile depth	L1 (mm)	L2 (mm)	№
72 – 76	80	75	613168
67 – 71	70	70	613169
62 – 66	70	65	613170
57 – 61	60	60	613171
51 – 56	60	55	613172
46 – 50	50	50	613173

Roto Line accessory kit – type 2

Parts list

Sash profile depth	L1 (mm)	L2 (mm)	№
68 – 77	87	80	613174
58 – 67	77	70	613175
48 – 57	67	60	613176
38 – 47	57	50	613177

Roto Line accessory kit – type 3

Parts list

Sash profile depth (mm)	L1 (mm)	L2 (mm)	№
68 – 77	100	80	613178
58 – 67	90	70	613179
48 – 57	80	60	613180
38 – 47	70	50	613181

Roto Samba
The classic modern range of handles

Roto Samba spans the range between a classical and modern aesthetic.

Following the design principle "form follows function", Roto Samba is ergonomically perfectly formed with its semi-circular handle back side and the arched front side to support the thumb. A hollow for the index finger ensures a defined grip position and comfortable handling. This means the handle can be gripped optimally in each position which ensures comfortable handle operation.

Roto Samba Standard

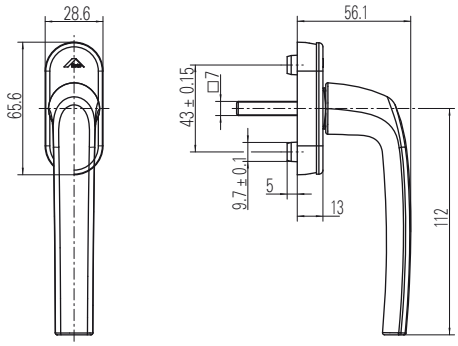

Parts list

Colour							№
Spindle length 32							
Silver	R01.1		M5X40	32		100	639648
Titanium	R01.3		M5X40	32		100	639667
Brass, matt	R03.1		M5X40	32		100	639651
Grey brown	R04.1		M5X40	32		100	639645
Bronze	R05.5		M5X40	32		100	639654
Traffic white	R07.2		M5X40	32		100	639621
Spindle length 37							
Silver	R01.1		M5X45	37		100	639649
Titanium	R01.3		M5X45	37		100	639668
Brass	R03.1		M5X45	37		100	639652
Grey brown	R04.1		M5X45	37		100	639646
Bronze	R05.5		M5X45	37		100	639665
Traffic white	R07.2		M5X45	37		100	639623
Spindle length 43							
Silver	R01.1		M5X50	43		100	639650
Titanium	R01.3		M5X50	43		100	639669
Brass	R03.1		M5X50	43		100	639653
Grey brown	R04.1		M5X50	43		100	639647
Bronze	R05.5		M5X50	43		100	639666
Traffic white	R07.2		M5X50	43		100	639624

Product description

- Basic handle without additional functions
- 90-degree lock-in position
- Classification according to DIN EN 13126-3, see page 17, table 1
- 10-year functional warranty
-
-

Scope of delivery

- 1 window handle
- 2 fixing screws

Roto Samba Standard for night ventilation

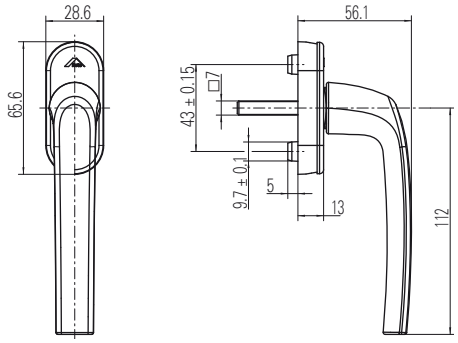

Parts list

Colour							Nº
Spindle length 32							
Silver	R01.1		M5X40	32		100	639676
Titanium	R01.3		M5X40	32		100	639695
Brass, matt	R03.1		M5X40	32		100	639679
Grey brown	R04.1		M5X40	32		100	639673
Bronze	R05.5		M5X40	32		100	639682
Traffic white	R07.2		M5X40	32		100	639670
Spindle length 37							
Silver	R01.1		M5X45	37		100	639677
Titanium	R01.3		M5X45	37		100	639696
Brass, matt	R03.1		M5X45	37		100	639680
Grey brown	R04.1		M5X45	37		100	639674
Bronze	R05.5		M5X45	37		100	639683
Traffic white	R07.2		M5X45	37		100	639671
Spindle length 43							
Silver	R01.1		M5X50	43		100	639678
Titanium	R01.3		M5X50	43		100	639697
Brass, matt	R03.1		M5X50	43		100	639681
Grey brown	R04.1		M5X50	43		100	639675
Bronze	R05.5		M5X50	43		100	639684
Traffic white	R07.2		M5X50	43		100	639672

Product description

- Basic handle
- 90-degree lock-in position, 45-degree lock-in position for night ventilation
- Classification according to DIN EN 13126-3, see page 17, table 1
- 10-year functional warranty
-
-

Scope of delivery

- 1 window handle
- 2 fixing screws

Roto Samba Secustik®

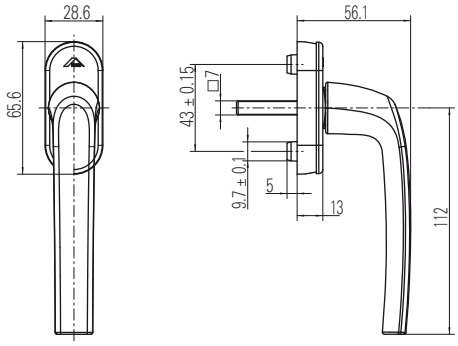

Parts list

Colour							№
Spindle length 32							
Silver	R01.1		M5X45	32		80	639704
Titanium	R01.3		M5X45	32		80	639715
Brass	R03.1		M5X45	32		80	639709
Grey brown	R04.1		M5X45	32		80	639701
Bronze	R05.5		M5X45	32		80	639712
Traffic white	R07.2		M5X45	32		80	639698
Spindle length 37							
Silver	R01.1		M5X50	37		80	639706
Titanium	R01.3		M5X50	37		80	639716
Brass	R03.1		M5X50	37		80	639710
Grey brown	R04.1		M5X50	37		80	639702
Bronze	R05.5		M5X50	37		80	639713
Traffic white	R07.2		M5X50	37		80	639699
Spindle length 43							
Silver	R01.1		M5X55	43		80	639707
Titanium	R01.3		M5X55	43		80	639717
Brass	R03.1		M5X55	43		80	639711
Grey brown	R04.1		M5X55	43		80	639703
Bronze	R05.5		M5X55	43		80	639714
Traffic white	R07.2		M5X55	43		80	639700

Product description

- Handle with automatic locking
- Security against manipulation from outside
- 90-degree lock-in position
- Classification according to DIN EN 13126-3, see page 17, table 2
- 10-year functional warranty
-
-

Scope of delivery

- 1 window handle
- 2 fixing screws

Note

Refer to page 19 for further information.

Roto Samba, lockable – 40 Nm

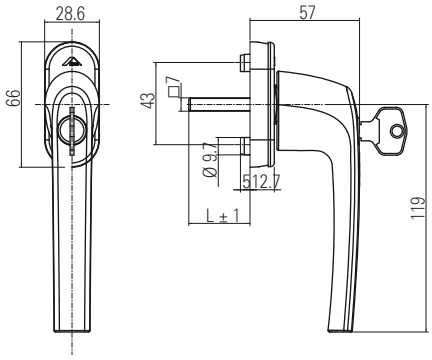

Parts list

Colour							Nº
Spindle length 32							
Silver	R01.1		M5X40	32		40	639693
Titanium	R01.3		M5X40	32		40	639744
Brass	R03.1		M5X40	32		40	639736
Grey brown	R04.1		M5X40	32		40	639721
Bronze	R05.5		M5X40	32		40	639741
Traffic white	R07.2		M5X40	32		40	639718
Spindle length 37							
Silver	R01.1		M5X45	37		40	639694
Titanium	R01.3		M5X45	37		40	639745
Brass	R03.1		M5X45	37		40	639737
Grey brown	R04.1		M5X45	37		40	639722
Bronze	R05.5		M5X45	37		40	639742
Traffic white	R07.2		M5X45	37		40	639719
Spindle length 43							
Silver	R01.1		M5X50	43		40	639735
Titanium	R01.3		M5X50	43		40	639746
Brass	R03.1		M5X50	43		40	639738
Grey brown	R04.1		M5X50	43		40	639723
Bronze	R05.5		M5X50	43		40	639743
Traffic white	R07.2		M5X50	43		40	639720

Product description

- Lockable handle with tested torque of 40 Nm
- Locking: Push cylinder with turn-key
- For locking and unlocking
- operable if handle is unlocked
- 90-degree lock-in position
- Classification according to DIN EN 13126-3, see page 17, table 3
- 10-year functional warranty
-
-

Scope of delivery

- 1 window handle
- 2 fixing screws

Roto Samba, lockable – 100 Nm

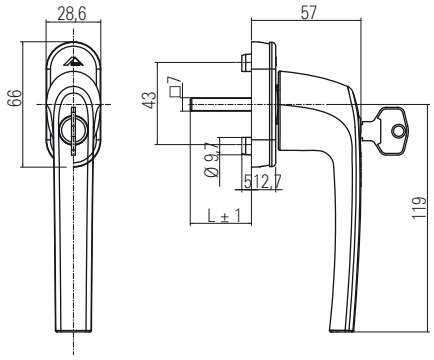

Parts list

Colour							Nº
Spindle length 32							
Silver	R01.1		M5X40	32		40	639753
Titanium	R01.3		M5X40	32		40	639762
Brass, matt	R03.1		M5X40	32		40	639756
Grey brown	R04.1		M5X40	32		40	639750
Bronze	R05.5		M5X40	32		40	639759
Traffic white	R07.2		M5X40	32		40	639747
Spindle length 37							
Silver	R01.1		M5X45	37		40	639754
Titanium	R01.3		M5X45	37		40	639763
Brass, matt	R03.1		M5X45	37		40	639757
Grey brown	R04.1		M5X45	37		40	639751
Bronze	R05.5		M5X45	37		40	639760
Traffic white	R07.2		M5X45	37		40	639748
Spindle length 43							
Silver	R01.1		M5X50	43		40	639755
Titanium	R01.3		M5X50	43		40	639764
Brass, matt	R03.1		M5X50	43		40	639758
Grey brown	R04.1		M5X50	43		40	639752
Bronze	R05.5		M5X50	43		40	639761
Traffic white	R07.2		M5X50	43		40	639749

Product description

- Lockable handle with tested torque of 100 Nm
- Locking: Push cylinder with turn-key
- simple and quick locking by pushing down the cylinder
- meets the requirements of DIN EN 1627-1630, RC1 – RC6
- 90-degree lock-in position
- Classification according to DIN EN 13126-3, see page 17, table 4
- 10-year functional warranty
-
-

Scope of delivery

- 1 window handle
- 2 fixing screws

Note

Refer to page 18 for further information.

Roto Samba with push-button

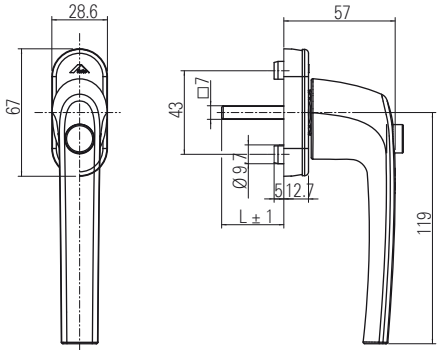

Parts list

Colour							Nº
Spindle length 32							
Silver	R01.1		M5X40	32		40	639799
Titanium	R01.3		M5X40	32		40	639808
Brass, matt	R03.1		M5X40	32		40	639802
Grey brown	R04.1		M5X40	32		40	639796
Bronze	R05.5		M5X40	32		40	639805
Traffic white	R07.2		M5X40	32		40	639783
Spindle length 37							
Silver	R01.1		M5X45	37		40	639800
Titanium	R01.3		M5X45	37		40	639809
Brass, matt	R03.1		M5X45	37		40	639803
Grey brown	R04.1		M5X45	37		40	639797
Bronze	R05.5		M5X45	37		40	639806
Traffic white	R07.2		M5X45	37		40	639784
Spindle length 43							
Silver	R01.1		M5X50	43		40	639801
Titanium	R01.3		M5X50	43		40	639810
Brass, matt	R03.1		M5X50	43		40	639804
Grey brown	R04.1		M5X50	43		40	639798
Bronze	R05.5		M5X50	43		40	639807
Traffic white	R07.2		M5X50	43		40	639795

Product description

- Window handle with push-button
- Push-button function enables locking and unlocking
- 90-degree lock-in position
- Classification according to DIN EN 13126-3, see page 17, table 6
- 10-year functional warranty
-
-

Scope of delivery

- 1 window handle
- 2 fixing screws

Roto Samba Tilt-First, lockable – 40 Nm

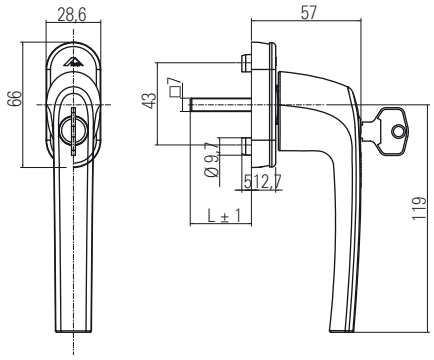

Parts list

Colour							№
Spindle length 32							
Silver	R01.1		M5X40	32		40	639771
Titanium	R01.3		M5X40	32		40	639780
Brass, matt	R03.1		M5X40	32		40	639774
Grey brown	R04.1		M5X40	32		40	639768
Bronze	R05.5		M5X40	32		40	639777
Traffic white	R07.2		M5X40	32		40	639765
Spindle length 37							
Silver	R01.1		M5X45	37		40	639772
Titanium	R01.3		M5X45	37		40	639781
Brass, matt	R03.1		M5X45	37		40	639775
Grey brown	R04.1		M5X45	37		40	639769
Bronze	R05.5		M5X45	37		40	639778
Traffic white	R07.2		M5X45	37		40	639766
Spindle length 43							
Silver	R01.1		M5X50	43		40	639773
Titanium matt	R01.3		M5X50	43		40	639782
Brass, matt	R03.1		M5X50	43		40	639776
Grey brown	R04.1		M5X50	43		40	639770
Bronze	R05.5		M5X50	43		40	639779
Traffic white	R07.2		M5X50	43		40	639767

Product description

- Lockable handle with tested torque of 40 Nm
- For Tilt-First window operation (tilt before turn)
- Locking: Push cylinder with turn-key
- Lockable in 0-degree and 90-degree position
- 90-degree lock-in position
- Classification according to DIN EN 13126-3, see page 17, table 3
- 10-year functional warranty
-
-

Scope of delivery

- 1 window handle
- 2 fixing screws

Note

Refer to page 20–21 for further information.

Roto Samba door handle set for inside and outside operation

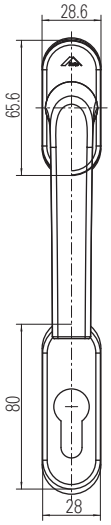

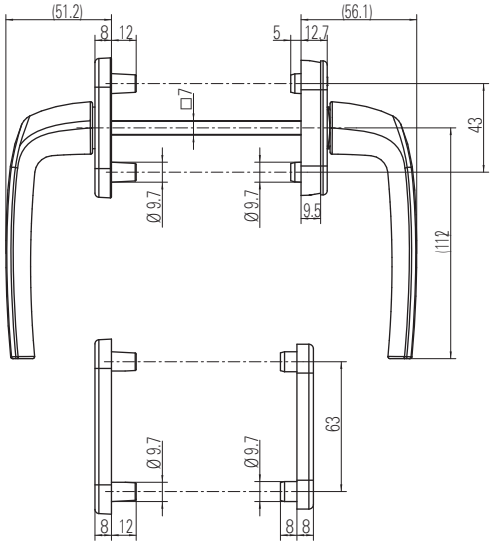

Parts list

Colour							№
Spindle length 127							
Silver	R01.1		M5X110	127		1	639815
Titanium	R01.3		M5X110	127		1	639818
Brass, matt	R03.1		M5X110	127		1	639816
Grey brown	R04.1		M5X110	127		1	639814
Bronze	R05.5		M5X110	127		1	639817
Traffic white	R07.2		M5X110	127		1	639813

Product description

- Handle set with rosette version
- Outside handle fix connected
- Standard handle with PC rosette outside and inside
- Concealed screw fixing
- 90-degree lock-in position
- 10-year functional warranty
-
-

Scope of delivery

- 2 window handles
- 2 PC rosettes
- 4 fixing screws

Note

Profile cylinder not included in delivery scope.
For the use with aluminium profiles, a flush-encased gearbox is required (see page 80–81).

Roto Samba door handle set for inside and outside operation

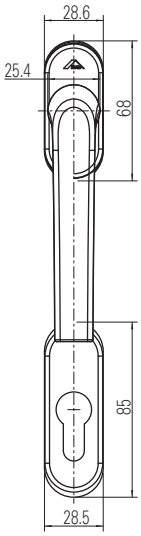

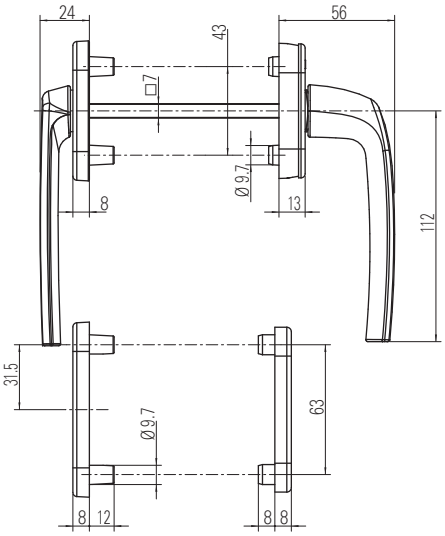

Parts list

Colour							№
Spindle length 127							
Silver	R01.1		M5X110	127		1	640333
Titanium matt	R01.3		M5X110	127		1	640335
Brass, matt	R03.1		M5X110	127		1	640334
Grey brown	R04.1		M5X110	127		1	640332
Bronze	R05.5		M5X110	127		1	640336
Traffic white	R07.2		M5X110	127		1	640331

Product description

- Handle set with rosette version
- Outside handle fix connected
- Short-necked handle with PC rosette outside
- Standard handle with PC rosette inside
- Concealed screw fixing
- 90-degree lock-in position
- 10-year functional warranty
-
-

Scope of delivery

- 2 window handles
- 2 PC rosettes
- 4 fixing screws

Note

Profile cylinder not included in delivery scope.

Roto Freestyle

Roto espagnolette AL 300

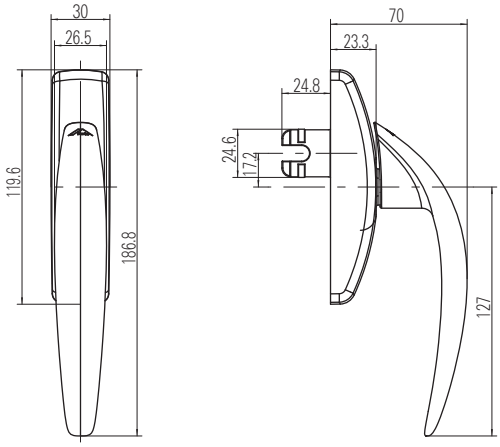

Parts list

Colour							№
Fork length 26							
Silver	R01.5	-	-	26		10	486161
Jet black	R06.2	-	-	26		10	486162
Traffic white	R07.2	-	-	26		10	486163
Unpainted, uncoated	Raw	-	-	26	-	50	486165
Special colour	SP COL	-	-	26		10	486164

Product description

- Geared-handle without additional functions
- 90-degree lock-in position
-
-

Scope of delivery

- 1 geared-handle

Connector set for Roto Line espagnolettes

Parts list

Description				№
Connector set AL 540	-	-	10	335184

Product description

- Connector for connecting geared-handles
- Predetermined breaking point for enabling two main corner drives at the central locking system

Scope of delivery

- 1 T connector
- 2 flat-headed screws M5 x 12

Espagnolette accessories set for Roto Line espagnolettes with thin-walled profiles

Parts list

Description				№
Espagnolette accessories set AL 540 optional	-	-	10	335002

Product description

- Geared-handle support for fixing of the geared-handle
- Can be used optionally with thin-walled sash profiles

Scope of delivery

- 1 geared-handle support
- 2 flat-headed screws M5 x 12

Geared-handle support

Parts list

Description				№
Geared-handle support	-	-	100	331937

Flat-headed screw M5 x 12

Parts list

Description				№
Flat-headed screw M5 x 12	-	-	100	212500

Connector-bolt, insertable

Parts list

Description				№
Connector-bolt, insertable				
Zinc alloy	-	-	100	254601
PVC	-	-	100	334672

Product description

- For connecting geared-handles
- Only for Turn-Only sashes

Roto reverse-action espagnolette AL 300

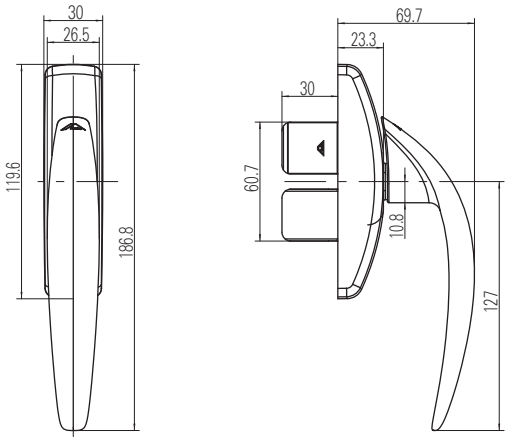

Parts list

Colour							№
Fork length 30							
Silver	R01.5	-	-	30		10	486277
Jet black	R06.2	-	-	30		10	490162
Traffic white	R07.2	-	-	30		10	490163
Unpainted, uncoated	Raw	-	-	30	-	50	490164
Special colour	SP COL	-	-	30		10	490235

Product description

- Reverse-action espagnolette without additional functions
- 90-degree lock-in position
-
-

Scope of delivery

- 1 reverse-action espagnolette

Connector set for Roto Line reverse-action espagnolettes

Parts list

Description				№
Connector set for reverse-action espagnolettes	-	-	10	212325

Product description

- Connector set for connecting reverse-action espagnolettes
- Hinging of the connecting-rod with 6 mm bracket

Scope of delivery

- 1 connector for Roto Line top reverse-action espagnolette
- 1 connector for Roto Line bottom reverse-action espagnolette
- 2 flat-headed screws M5 x 12

Connector for Roto Line top reverse-action espagnolette

Parts list

Description				№
Connector for Roto Line top reverse-action espagnolette	-	-	100	212000

Connector for Roto Line bottom reverse-action espagnolette

Parts list

Description				№
Connector for Roto Line bottom reverse-action espagnolette	-	-	100	212001

Roto Pop-up handles Standard

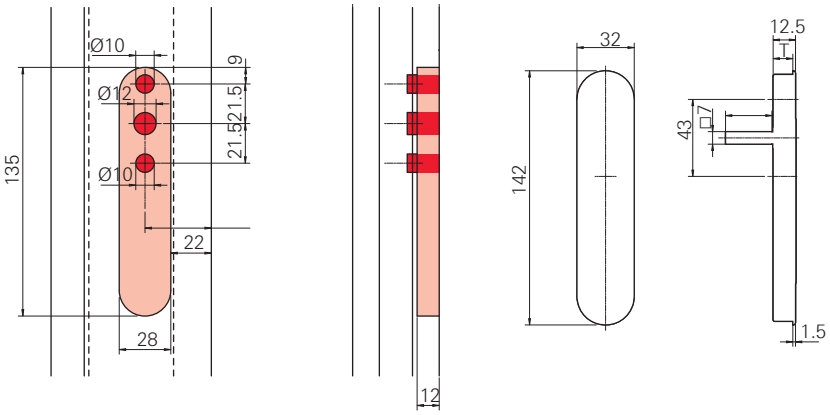

Parts list

Colour Screw cover							№
Spindle length 21.5 / d = 8							
Jet black **Black**	R06.2		-	21.5		1	637960
Traffic white **White**	R07.2		-	21.5		1	637961
Unpainted, uncoated	Raw		-	21.5	-	1	637962
Spindle length 26.5 / d = 8							
Silver Black	R01.1		-	26.5		1	637963
Jet black **Black**	R06.2		-	26.5		1	614295
Traffic white **White**	R07.2		-	26.5		1	570810
Unpainted, uncoated	Raw		-	26.5	-	1	637965
Spindle length 21 / d = 11							
Jet black **Black**	R06.2		-	21		1	535466
Traffic white **White**	R07.2		-	21		1	535465
Light grey **Black**	-		-	21		1	538246
Spindle length 26 / d = 11							
Grey brown **Black**	R04.1		-	26		1	323277
Jet black **Black**	R06.2		-	26		1	493898
Pure white **White**	R07.1		-	26		1	323275
Traffic white **White**	R07.2		-	26		1	312766

Product description

- Ideal solution for overlapping sliding sashes
- Almost flush with the profile
- Can be rotated with minimum force
- Can be placed back in its original position
- 2 versions: 8 mm deep or 11 mm deep for different installation depths
-
-

Scope of delivery

- 1 window handle

Colour							№
Cream white **White**	R07.3		-	26		1	494495
Gold **Black**	R03.2		-	26		1	323279
			-	26		1	323286
Stainless-steel design, brushed Black	R03.4		-	26	ep	1	323280
Unpainted, uncoated	Raw		-	26	ep	1	312769
Special colour **Black**	SP COL		-	26		1	494670

Spindle length 45 / d = 11

Jet black **Black**	R06.2		-	45		1	561198
Gold **Black**	R03.2		-	45		1	561196
Stainless-steel design, brushed Black	R03.4		-	45	ep	1	561197
Unpainted, uncoated	Raw		M5x40	45	-	1	632007

ep = electroplating

Roto Pop-up handles, lockable

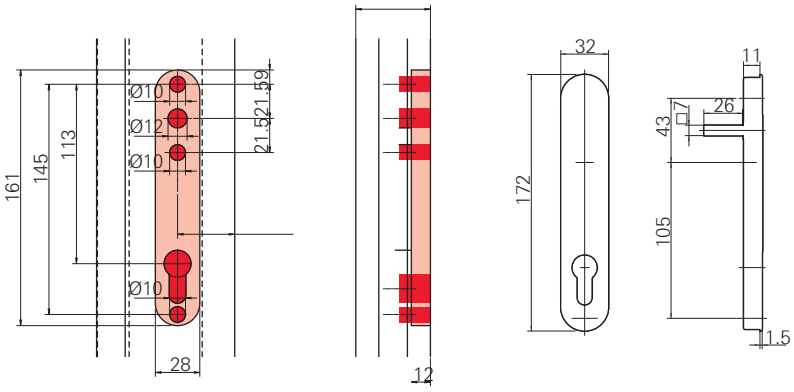

Parts list

Colour							№
Spindle length 26							
Grey brown	R04.1		-	26		1	323283
Traffic white	R07.2		-	26		1	323282
Gold	R03.2		-	26		1	323286
Stainless-steel design, brushed	R03.4		-	26	ep	1	323287

Product description

- Ideal solution for overlapping sliding sashes
- Almost flush with the profile
- Can be rotated with minimum force
- Can be placed back in its original position
- Prepared for profile cylinder
-
-

Scope of delivery

- 1 window handle

Note

Profile cylinder not included in delivery scope.

Roto retractable handle

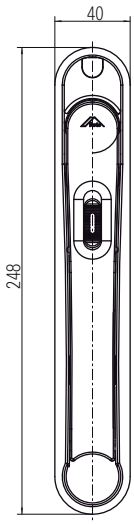

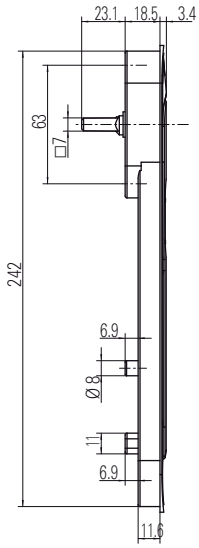

Parts list

Colour							№
Spindle length 20							
Silver	R01.5		-	20		1	489867
Medium bronze	R05.3		-	20		1	489866
Traffic white	R07.2		-	20		1	489865
Dark bronze	US10B		-	20		1	489868

Product description

- Ideal solution for overlapping sliding sashes
- Almost flush with the profile
- Can be rotated with minimum force
- Can be placed back in its original position
- Patented mechanism
-
-

Scope of delivery

- 1 window handle

Handle accessories

Roto

Roto replacement key

Parts list

Description				№
Replacement key 1G1 "big" L=44 mm, not suitable for Roto Swing TF and Roto Swing A40			1	257830
Replacement key 1G1 "small" L=37 mm, suitable for all Roto Swing, Roto Samba and Roto Line window handles incl. Roto Swing TF and Roto Swing A40			1	639099

Roto T&T restrictor with angle

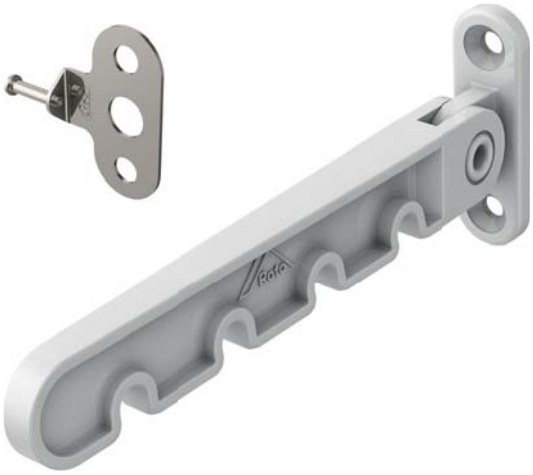

Parts list

Colour				№
Grey brown	R04.1		10	245686
Traffic white	R07.2		10	245685

Roto spindle

Parts list

Colour				№
Spindle 150			100	287824

Roto outside balcony door handle (PVC)

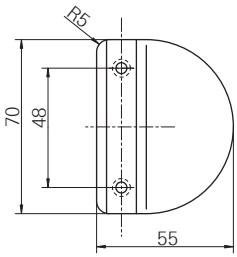

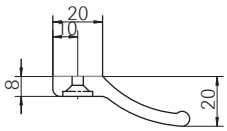

Parts list

Colour				№
Grey brown	R04.1	PVC	20	228258
Traffic white	R07.2	PVC	20	228259

Roto outside balcony door handle (aluminium)

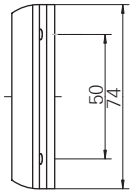

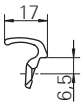

Parts list

Colour				№
Silver	R01.1	AL	100	355837
Medium bronze	R05.3	AL	100	355838
Traffic white	R07.2	AL	100	355839

Roto balcony door handle (die-cast zinc)

Parts list

Colour				№
White | RAL 9016	R07.2		1	539578
Cream white | RAL 9001	R07.3		1	539577
Brown | RAL 8022	R04.4		1	539570
Mahogany | RAL 8016	-		1	539566
Light oak | RAL 1001	-		1	539569
Moss green | RAL 6005	R09.1		1	539571
Fir green | RAL 6009	R09.2		1	539572
Steel blue | RAL 5011	R08.1		1	539573
Diamond blue | RAL 5007	-		1	539574
Anthracite | RAL 7016	R02.2		1	539575
Silver grey | RAL 7001	-		1	539576
Golden oak | RAL 8001	-		1	539565
Bronze | similar to C 33	R05.5		1	539651
White aluminium | RAL 9006	-		1	539642
Grey aluminium | RAL 9007	-		1	539780

Further RAL colours available upon request.

Roto balcony door handle, die-cast zinc, barrel finishing with mount-plate

Parts list

Colour				№
In-house sensitizing			1	540213

Roto balcony door handle to be mounted on the profile edge (PVC), type 1

Parts list

Colour				№
White			100	538620
Brown			100	539010
Matt silver			100	539238

Roto balcony door handle to be mounted on the profile edge (PVC), type 2

Parts list

Colour				№
White			100	539255
Brown			100	539256

Hardware systems should be treated with maintenance agents recommended by Roto – depending on demand.
Contamination with plaster and similar materials must be avoided in every case.
Only cleaning agents which do not contain corrosive materials should be used. Do not treat with strong acids and alkaline solutions.

Roto Samba

R01.1 Silver, anodised

R01.3 Titanium, anodised

R03.1 Brass, matt, anodised

R04.1 Grey brown, powder-coated

R05.5 Bronze, anodised

R07.2 Traffic white, powder-coated

Note: Colour deviations between product and representation are possible!

Roto
Creates inner values

Roto Frank AG
Window and Door Technology

Wilhelm-Frank-Platz 1
70771 Leinfelden-Echterdingen
Phone +49 711 7598 0
Fax +49 711 7598 253
info@roto-frank.com

www.roto-frank.com

MS / textract Dated: September 2014 Subject to change. CTL_1_EN_v2
© 2014 Roto Frank AG ® Roto is a registered trademark

From a single source: The optimum hardware system to meet all challenges

Roto Tilt&Turn | The Tilt&Turn hardware system for windows and balcony doors
Roto Sliding | Hardware systems for large sliding windows and doors
Roto Door | Matching hardware technology “everything about doors”
Roto Equipment | Additional technology for windows and doors