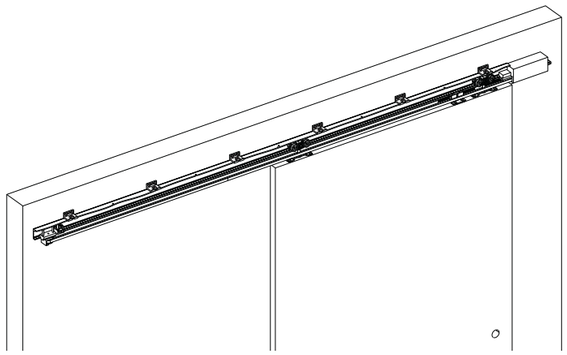

PERLAN AUT-2

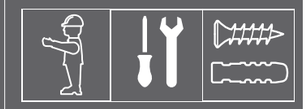

147760-01

GEZE

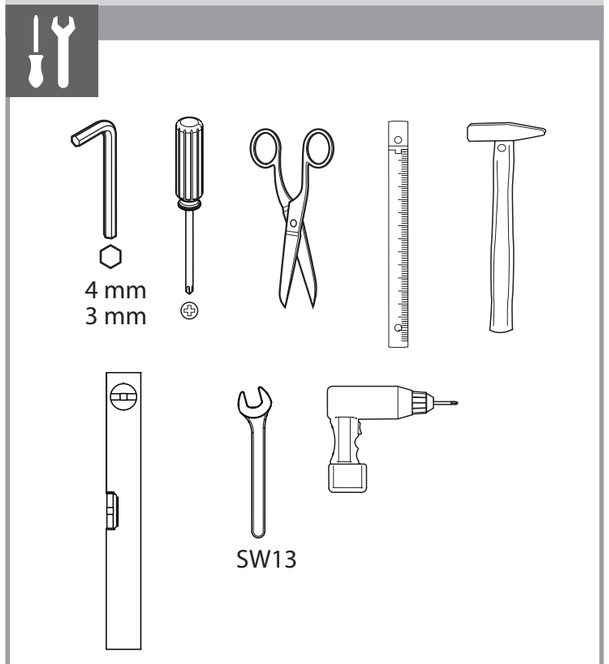

1

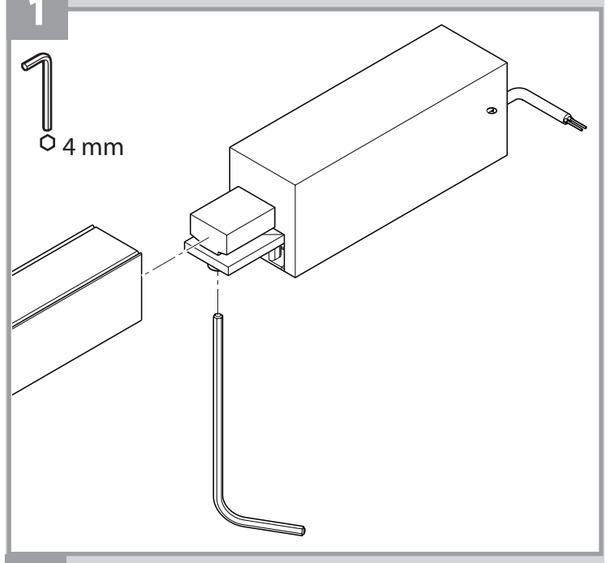

2

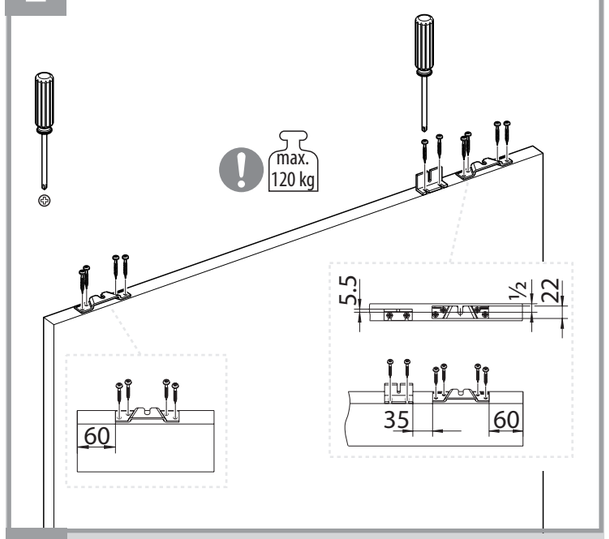

3

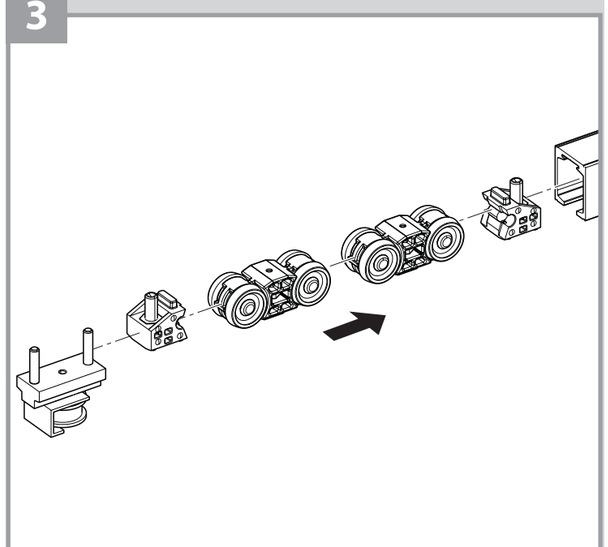

4

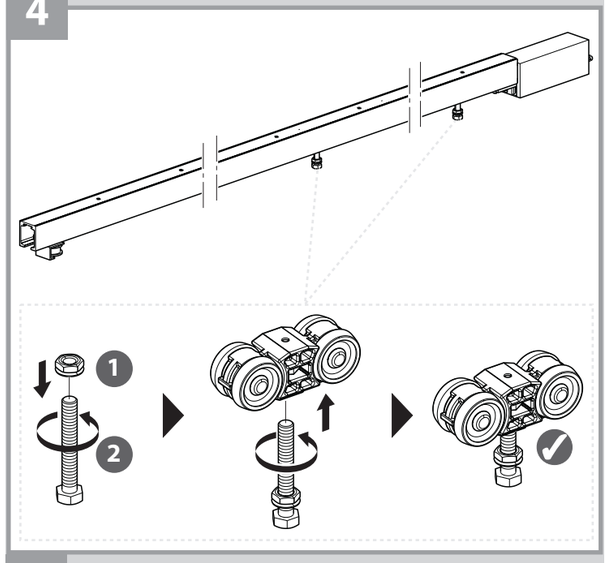

5

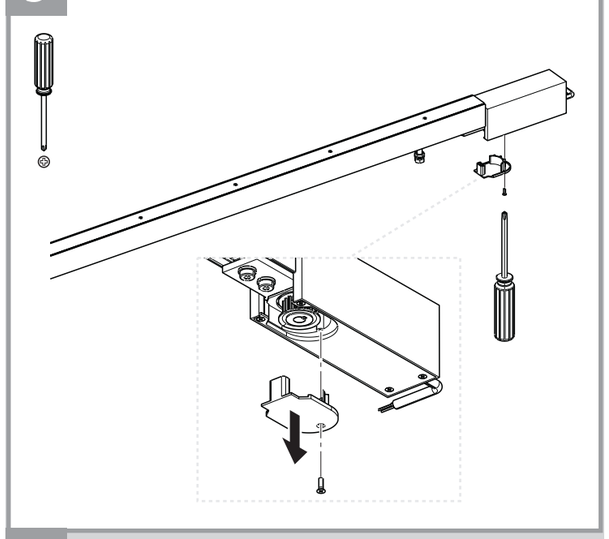

6

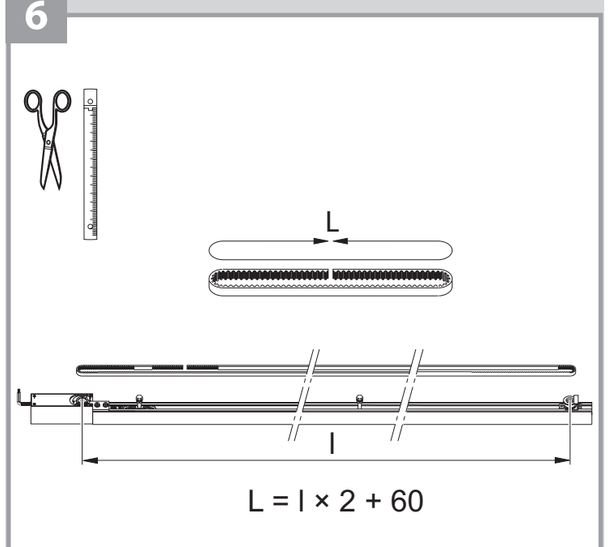

7

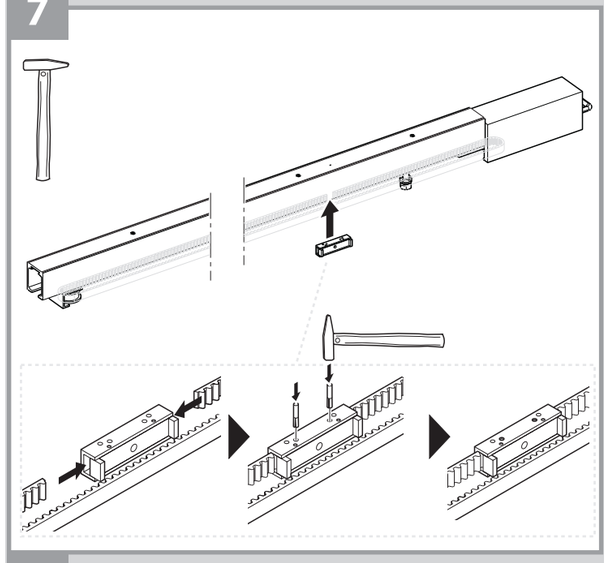

8

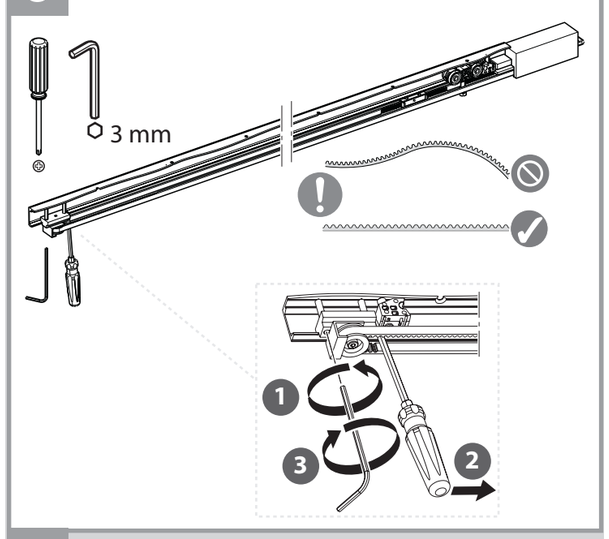

9

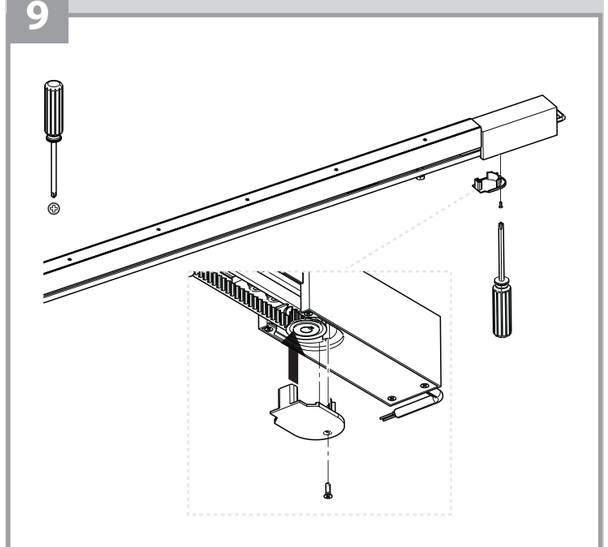

10

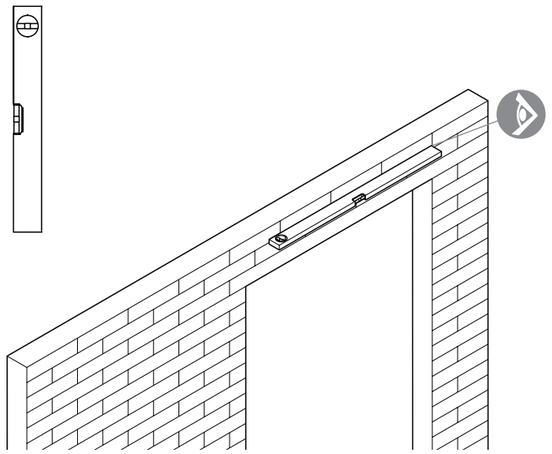

11

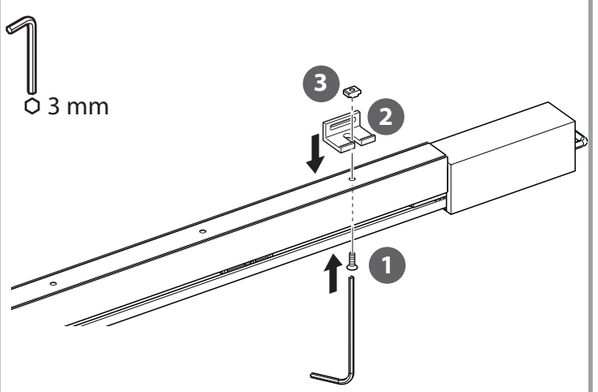

12

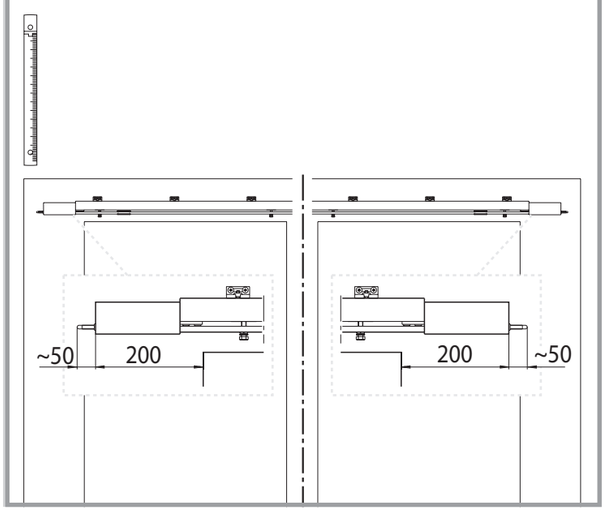

13

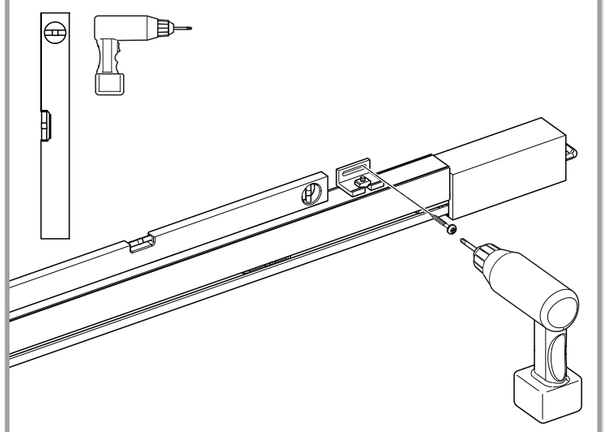

14

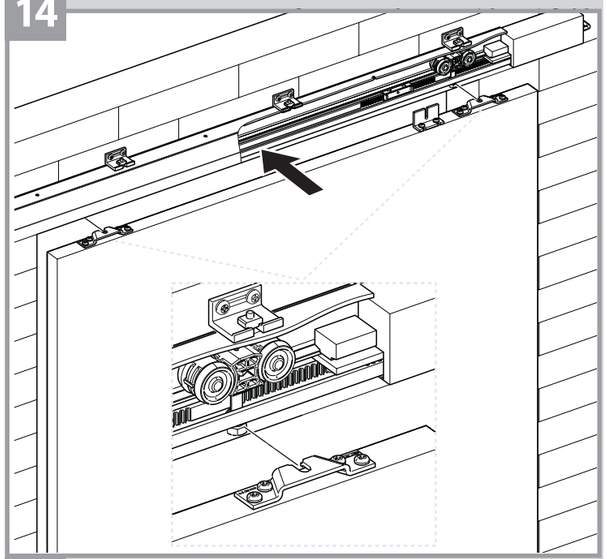

15

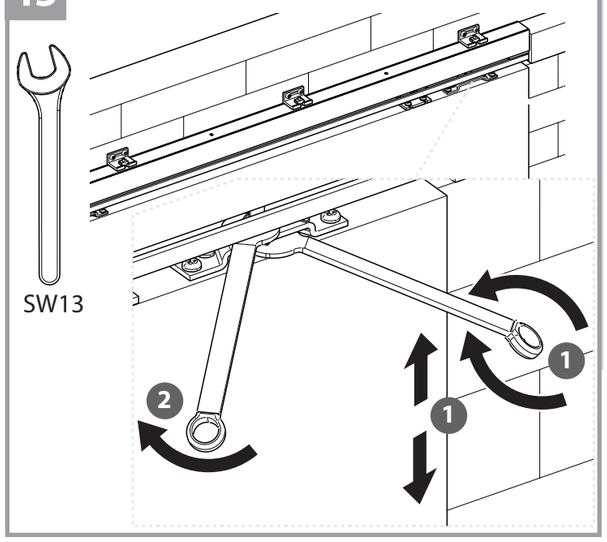

16

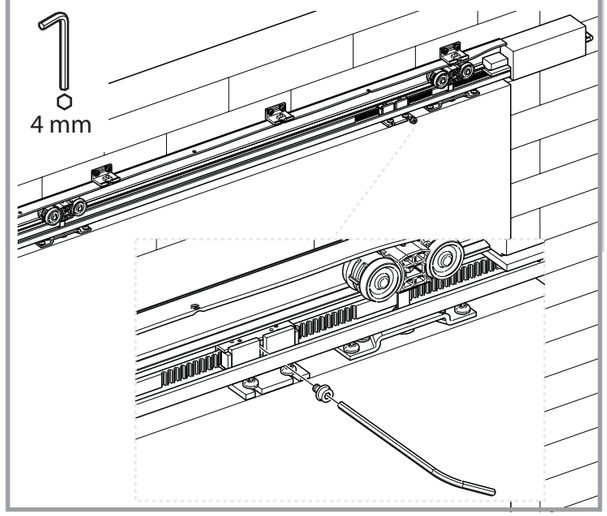

Germany
GEZE Sonderkonstruktionen GmbH
E-Mail: sk.de@geze.com

GEZE GmbH
Niederlassung Nord-Ost
E-Mail: berlin.de@geze.com

GEZE GmbH
Niederlassung West
E-Mail: essen.de@geze.com

GEZE GmbH
Niederlassung Mitte
E-Mail: frankfurt.de@geze.com

GEZE GmbH
Niederlassung Süd-West
E-Mail: leonberg.de@geze.com

GEZE GmbH
Niederlassung Süd-Ost

GEZE Service GmbH NL Süd-West

GEZE Service GmbH NL Nord-Ost

GEZE Service GmbH NL West

GEZE Service GmbH NL Mitte

GEZE Service GmbH NL Süd

Austria
GEZE Austria GmbH
E-Mail: austria.at@geze.com

Baltic States
GEZE GmbH Baltic States office
E-Mail: office-latvia@geze.com

Benelux
GEZE Benelux B.V.
E-Mail: benelux.nl@geze.com

Bulgaria
GEZE Bulgaria - Trade
E-Mail: office-bulgaria@geze.com

China
GEZE Industries (Tianjin) Co., Ltd.
E-Mail: Sales-info@geze.com.cn

GEZE Industries (Tianjin) Co., Ltd.
Branch Office Shanghai
E-Mail: chinasales@geze.com.cn

GEZE Industries (Tianjin) Co., Ltd.
Branch Office Guangzhou
E-Mail: chinasales@geze.com.cn

GEZE Industries (Tianjin) Co., Ltd.
Branch Office Beijing
E-Mail: chinasales@geze.com.cn

France
GEZE France S.A.R.L.
E-Mail: france.fr@geze.com

Hungary
GEZE Hungary Kft.
E-Mail: office-hungary@geze.com

Iberia
GEZE Iberia S.R.L.
E-Mail: info@geze.es

India
GEZE India Private Ltd.
E-Mail: office-india@geze.com

Italy
GEZE Italia S.r.l
E-Mail: italia.it@geze.com

GEZE Engineering Roma S.r.l
E-Mail: roma@geze.biz

Poland
GEZE Polska Sp.z o.o.
E-Mail: geze.pl@geze.com

Romania
GEZE Romania S.R.L.
E-Mail: office-romania@geze.com

Russia
OOO GEZE RUS
E-Mail: office-russia@geze.com

Scandinavia
GEZE Scandinavia AB
GEZE Sweden
E-Mail: sverige.se@geze.com

GEZE Scandinavia AB avd. Norge
E-Mail: norge.se@geze.com

GEZE Finland
E-Mail: finland.se@geze.com

GEZE Denmark
E-Mail: danmark.se@geze.com

Singapore
GEZE (Asia Pacific) Pte. Ltd.
E-Mail: gezesea@geze.com.sg

South Africa
DCLSA Distributors (Pty.) Ltd.
E-Mail: info@gezesa.co.za

Switzerland
GEZE Schweiz AG
E-Mail: schweiz.ch@geze.com

Turkey
GEZE GmbH Türkiye - İstanbul
E-Mail: office-turkey@geze.com

Ukraine
Repräsentanz GEZE Ukraine TOV
E-Mail: office-ukraine@geze.com

United Arab Emirates/GCC
GEZE Middle East
E-Mail: geze@emirates.net.ae

United Kingdom
GEZE UK Ltd.
E-Mail: info.uk@geze.com

GEZE GmbH
P.O.Box 1363
71229 Leonberg
Germany

Tel.: 0049 7152 203-0
Fax: 0049 7152 203-310
www.geze.com

147760-01